GENERAL TOLERANCE					
DIM. RANGE	0.5 ~ 3	> 3 ~ 6	> 6 ~ 30	> 30 ~ 120	> 120 ~ 400
TOLERANCE	±0.1	±0.1	±0.2	±0.3	±0.5

CUSTOMER DRAWING

REVISIONS		
REV	DESCRIPTION	DATE
A	INITIAL RELEASE	2015-01-10
C	MODIFY DIMENSION ADD CODE NUMBER	2016-03-18
D	ADD CODE NUMBER ADD DIMENSION	2016-06-01

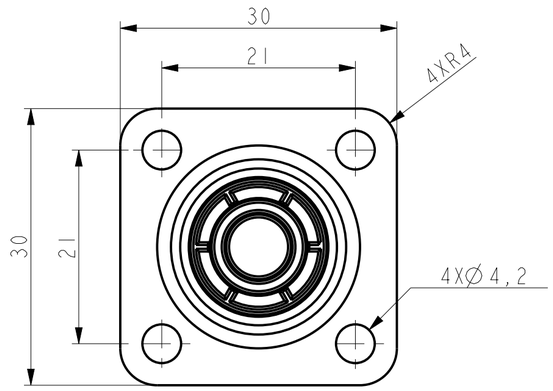

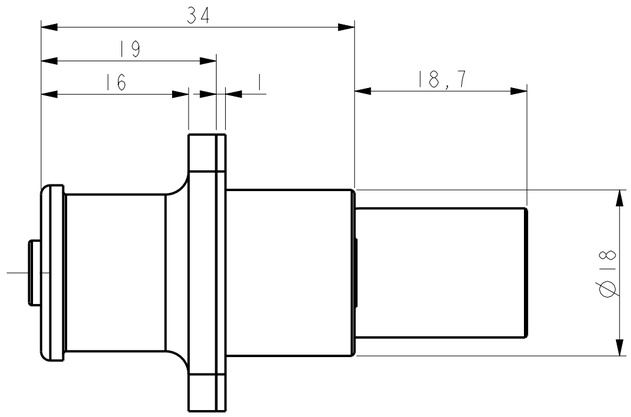

CRIMPING TYPE

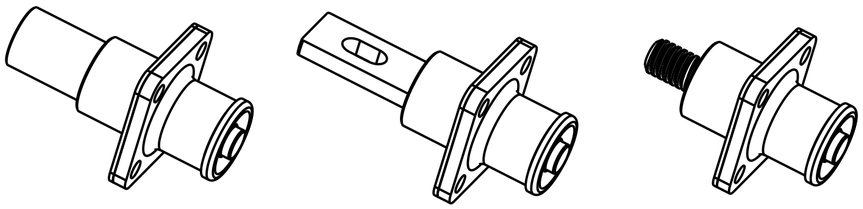

MFG PART NUMBER: C10-730189-( ) ( ) ( )

- BASE NUMBER
- COLOR, SEE TABLE
- PIN TYPE, SEE TABLE
- SEALING, SEE TABLE

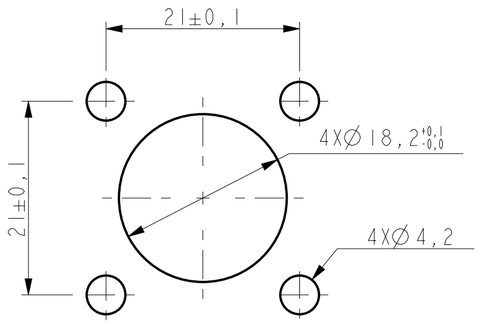

RECOMMENDED PANEL CUT OUT

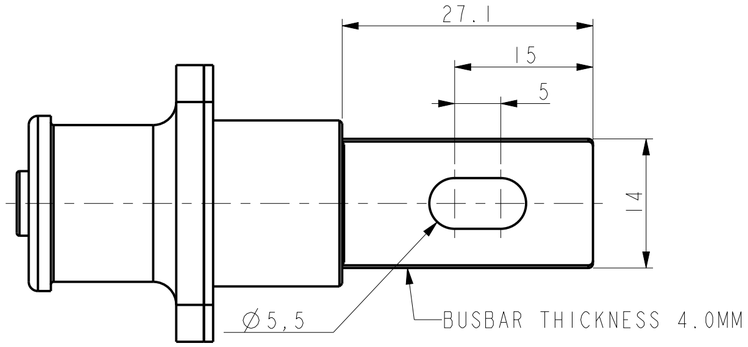

BUSBAR TYPE

CODE NUMBER REFERENCE: SLPRB ( ) P ( ) ( )

- BASE NUMBER
- PIN TYPE, SEE TABLE
- PANEL MOUNT
- SEALING, SEE TABLE
- COLOR, SEE TABLE

SPECIFICATIONS	
CURRENT RATING	200 Amps MAX
OPERATING VOLTAGE	1000V DC
OPERATING TEMPERATURE	-40°C-105°C
CONTACT RESISTANCE	0.3 mΩ

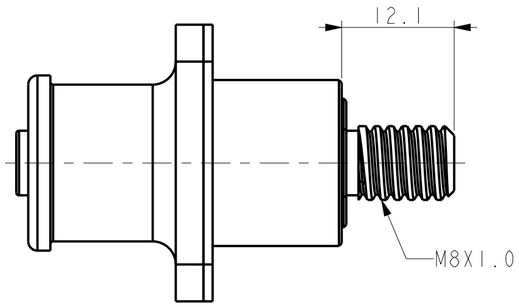

SCREW TYPE

ITEM	DESCRIPTION	CODE NUMBER	MFG NUMBER
COLOR	ORANGE	O	0
	BLACK	B	1
	RED	R	2
PIN TYPE	50 MM2 CRIMPING	50C	0
	35 MM2 CRIMPING	35C	3
	BUSBAR	B	1
	SCREW	T	2
SEALING	IP67(MATED)	S	0
	NO SEALING	N	1

2. IF CHOOSE NO SEALING TYPE, THERE WILL BE NO O-RINGS AND GASKET.

1. THE REFERENCED PRODUCT IS IN COMPLIANCE WITH THE MAXIMUM CONCENTRATION VALUES (MCVS) AS SET BY RoHS 2.0 DIRECTIVE 2011/65/EU AND ANNEX II AMENDMENT DIRECTIVE (EU)2015/863.

NOTES:

THIS DOCUMENT CONTAINS PROPRIETARY INFORMATION AND SUCH INFORMATION MAY NOT BE DISCLOSED TO OTHERS FOR ANY PURPOSE OR USED FOR MANUFACTURING PURPOSES WITHOUT WRITTEN PERMISSION FROM THE AMPHENOL CORP.

N/A

NEXT ASSEMBLY

METRIC DOCUMENT

PRO/ENGINEER INFORMATION
Pro/e Model Used:
10-730189-_00.ASSEM
Drawing Name:
10-730189_CUS

UNLESS OTHERWISE SPECIFIED
LINEAR DIMENSIONS ARE IN:
MILLIMETERS
TOLERANCES:
ANGLES= ±2°
DEFAULT LINEAR TOLERANCES SEE TABLE
DIM.& TOL. PER ASME Y14.5M-1994;
DRM PER MIL-DTL-31000;
OTHER AMPHENOL STANDARDS: 9-9318
LEGENDS:
=FLAG NOTE CALL OUT
REFERENCE ONLY

SPECIFICATIONS
MATERIAL SPEC.
N/A
PROCESS SPEC.
N/A

POS	QTY	PART NUMBER	DESCRIPTION	NOTE

PARTS LIST

APPROVALS		DATE
PREPARED BY	SEVEN XIE	18-Mar-16
ENGINEER IN CHARGE	ROB WENG	
DESIGN MANAGER	DERIC LI	
DESIGN ACTIVITY GROUP	C&I	

THIRD ANGLE PROJECTION

AMPHENOL INDUSTRIAL OPERATIONS
Amphenol Technology(Zhuhai)Co.,Ltd
No.63, Xinghan Road, Sanzao Town, Jinwan, Zhuhai, PRC

U

R4 8.0MM SURLOK PLUS RECEPTACLE

SIZE	CAGE CODE	DOCUMENT NO.	REV.
C	77820	10-730189-()	D

SCALE: 1,0 | REF. | SHEET 1 OF 1

DOCUMENT NO. 10-730189-() | SHEET 1 OF 1 | REV. D

FORMAT: C-L-E-Rev.B

Downloaded From Oneyac.com

单击下面可查看定价，库存，交付和生命周期等信息

>>Amphenol(安费诺)

Downloaded From Oneyac.com