MagAlpha MA730

14-Bit, Digital, Contactless Angle Sensor with ABZ Incremental & PWM Outputs

The Future of Analog IC Technology®

DESCRIPTION

The MA730 detects the absolute angular position of a permanent magnet, typically a diametrically magnetized cylinder on a rotating shaft. Fast data acquisition and processing provide accurate angle measurements at speeds from 0 to 60,000 rpm.

The MA730 supports a wide range of magnetic field strengths and spatial configurations. Both end-of-shaft and off-axis (side-shaft mounting) configurations are supported.

The MA730 features magnetic field strength detection with programmable thresholds to allow sensing of the magnet position relative to the sensor for creation of functions, such as the sensing of axial movements or for diagnostics.

On-chip non-volatile memory provides storage for configuration parameters, including the reference zero angle position, ABZ encoder settings, and magnetic field detection thresholds.

FEATURES

- 14-Bit Resolution Absolute Angle Encoder
- Contactless Sensing for Long Life
- SPI Serial Interface for Digital Angle Readout and Chip Configuration
- Incremental 12-Bit ABZ Quadrature Encoder Interface with Programmable Pulses Per Turn from 1 - 1024
- PWM Output 14-Bit
- Programmable Magnetic Field Strength Detection for Diagnostic Checks
- 3.3V, 12mA Supply
- -40°C to +125°C Operating Temperature
- Available in a QFN-16 (3mmx3mm) Package

APPLICATIONS

- General Purpose Angle Measurements
- High-Resolution Angle Encoders
- Automotive Angle
- Robotics

All MPS parts are lead-free, halogen-free, and adhere to the RoHS directive. For MPS green status, visit the MPS website under Quality Assurance. "MPS", the MPS logo, and "Simple, Easy Solutions" are registered trademarks of Monolithic Power Systems, Inc. or its subsidiaries.

TYPICAL APPLICATION

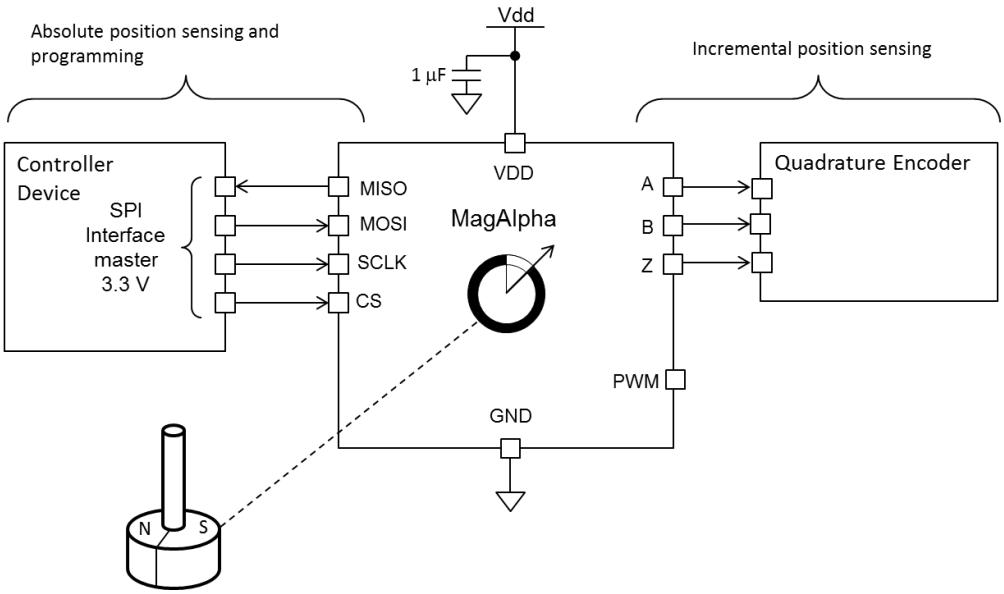

MPS Proprietary Information. Patent Protected. Unauthorized Photocopy and Duplication Prohibited.
© 2022 MPS. All Rights Reserved.

ORDERING INFORMATION

Part Number*	Package	Top Marking
MA730GQ	QFN-16 (3mmx3mm)	*See Below*

* For Tape & Reel, add suffix -Z (e.g. MA730GQ-Z)

TOP MARKING

AZAY
LLL

AZA: Product code of MA730GQ
Y: Year code
LLL: Lot number

PACKAGE REFERENCE

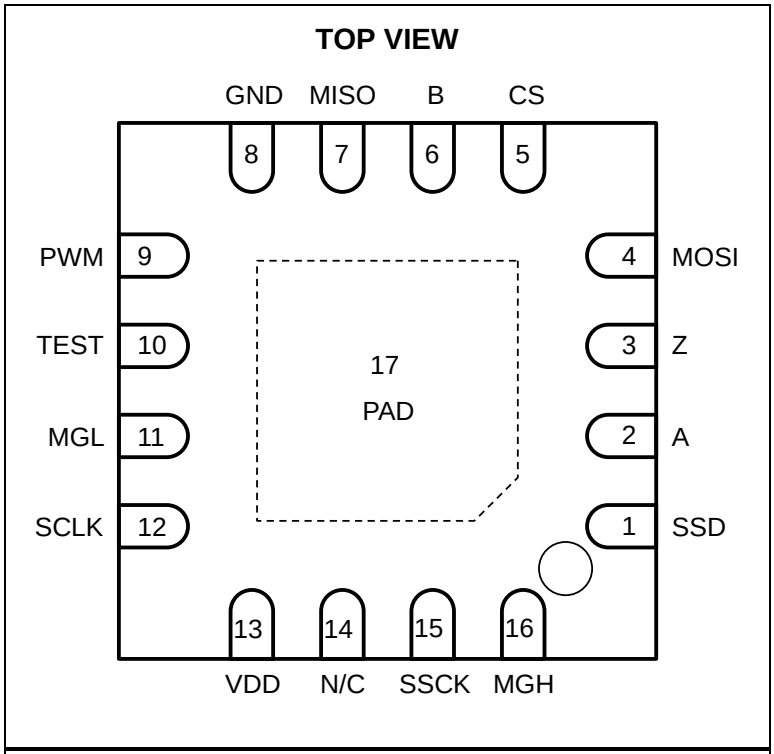

QFN-16 (3mmx3mm)

MPS Proprietary Information. Patent Protected. Unauthorized Photocopy and Duplication Prohibited.
© 2022 MPS. All Rights Reserved.

ABSOLUTE MAXIMUM RATINGS (1)

Supply voltage .....-0.5V to +4.6V
Input pin voltage (V_I) .....-0.5V to +6.0V
Output pin voltage (V_O) .....-0.5V to +4.6V
Continuous power dissipation (T_A = +25°C) (2)
..... 2.0W
Junction temperature .....125°C
Lead temperature .....260°C
Storage temperature..... -65°C to 150°C

Thermal Resistance (3)	θ_{JA}	θ_{JC}	
QFN-16 (3mmx3mm)	50	12	°C/W

NOTES:
1) Exceeding these ratings may damage the device.
2) The maximum allowable power dissipation is a function of the maximum junction temperature T_J (MAX), the junction-to-ambient thermal resistance θ_{JA}, and the ambient temperature T_A. The maximum allowable continuous power dissipation at any ambient temperature is calculated by P_D (MAX) = (T_J (MAX)-T_A)/θ_{JA}.
3) Measured on JESD51-7, 4-layer PCB.

MPS Proprietary Information. Patent Protected. Unauthorized Photocopy and Duplication Prohibited.
© 2022 MPS. All Rights Reserved.

ELECTRICAL CHARACTERISTICS

Parameter	Symbol	Condition	Min	Typ	Max	Units
Recommended Operating Conditions						
Supply voltage	V_{DD}		3.0	3.3	3.6	V
Supply current	I_{DD}	From -40°C to +125°C	10.2	11.7	13.8	mA
Operating temperature	Top		-40		125	°C
Applied magnetic field	B		40	60		mT

MPS Proprietary Information. Patent Protected. Unauthorized Photocopy and Duplication Prohibited.
© 2022 MPS. All Rights Reserved.

GENERAL CHARACTERISTICS

VDD = 3.3V, 45mT < B < 100mT, temp = -40°C to +125°C, unless otherwise noted.

Parameter	Symbol	Condition	Min	Typ	Max	Units
Absolute Output – Serial						
Effective resolution		3σ deviation of the noise distribution	13.0	13.8	14.5	bits
Noise RMS			0.003	0.004	0.007	deg
Refresh rate			850	980	1100	kHz
Data output length			16		16	bits
Response Time						
Power-up time (4)					260	ms
Latency (4)		Constant speed propagation delay	8		10	µs
Filter cutoff frequency (4)	Fcutoff			23		Hz
Accuracy						
INL at 25°C		At room temperature over the full field range		0.7		deg
INL between -40°C to +125°C (5)		Over the full temperature range and field range		1.1		deg
Output Drift						
Temperature induced drift at room temperature (5)				0.015	0.04	deg/°C
Temperature induced variation (5)		From 25°C to 85°C		0.5	1.2	deg
		From 25°C to 125°C		1.0	2.1	deg
Magnetic field induced (5)				0.005		deg/mT
Voltage supply induced (5)					0.3	deg/V
Absolute Output – PWM						
PWM frequency	Fpwm		840	970	1090	Hz
PWM resolution			13	13.8	14.0	bits
Incremental Output – ABZ						
ABZ update rate				16		MHz
Resolution - edges per turn		Programmable	4		4096	
Pulses per channel per turn	PPT+1	Programmable	1		1024	
ABZ hysteresis (5)	H				0.1	deg
Systematic jitter (5)		For PPT = 1023, between 0 and 100krpm, up to 60mT			11	%
		For PPT = 127, between 0 and 100krpm			7	%
Random jitter (3σ)		For PPT = 255, between 0 and 100krpm			4.2	%
		For PPT = 127, between 0 and 100krpm			0.5	%
Overall ABZ jitter (5)		Up to 60mT			0.2	deg

MPS Proprietary Information. Patent Protected. Unauthorized Photocopy and Duplication Prohibited.
© 2022 MPS. All Rights Reserved.

GENERAL CHARACTERISTICS *(continued)*

VDD = 3.3V, 45mT < B < 100mT, temp = -40°C to +125°C, unless otherwise noted.

Parameter	Symbol	Condition	Min	Typ	Max	Units
Magnetic Field Detection Thresholds						
Accuracy (5)				5		mT
Hysteresis (5)	MagHys			6		mT
Temperature drift (5)				-600		ppm/°C
Digital I/O						
Input high voltage	V_{IH}		2.5		5.5	V
Input low voltage	V_{IL}		-0.3		0.8	V
Output low voltage (5)	V_{OL}	I_{OL} = 4mA			0.4	V
Output high voltage (5)	V_{OH}	I_{OH} = 4mA	2.4			V
Pull-up resistor	R_{PU}		46	66	97	kΩ
Pull-down resistor	R_{PD}		43	55	97	kΩ
Rising edge slew rate (4)	T_R	CL = 50pF		0.7		V/ns
Falling edge slew rate (4)	T_F	CL = 50pF		0.7		V/ns

NOTES:
4) Guaranteed by design.
5) Guaranteed by characteristic test.

MPS Proprietary Information. Patent Protected. Unauthorized Photocopy and Duplication Prohibited.
© 2022 MPS. All Rights Reserved.

TYPICAL CHARACTERISTICS

VDD = 3.3V, Temp = 25°C, unless otherwise noted.

ABZ Jitter at PPT = 255

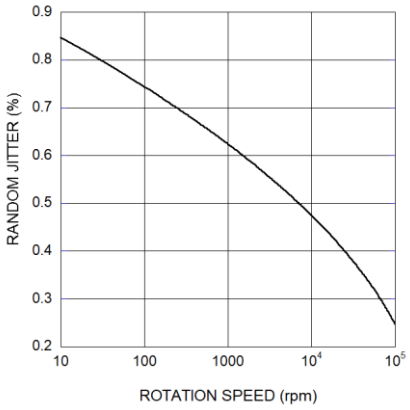

Current Consumption at VDD = 3.3V

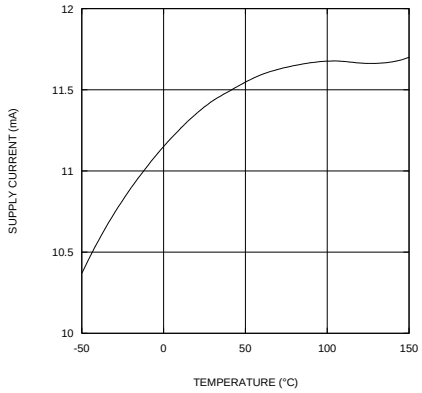

Filter Transfer Function

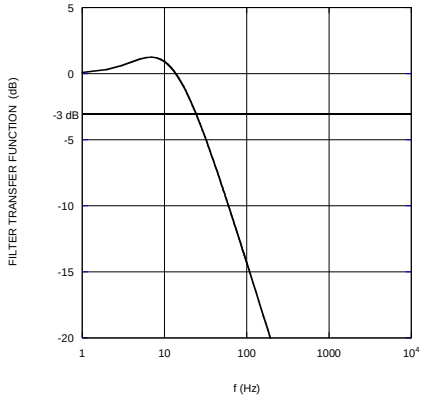

Error Curves at 50mT

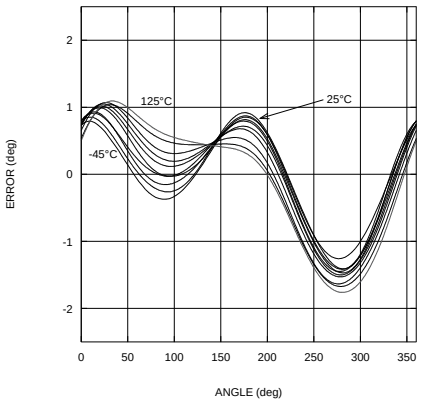

Non-Linearity (INL and Harmonics)

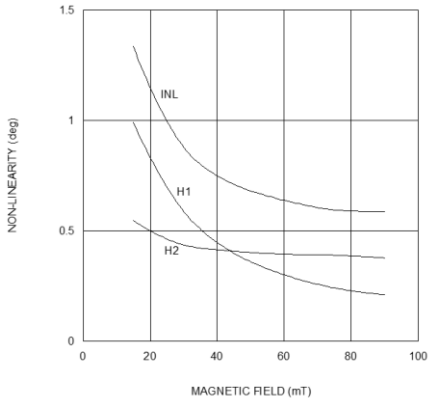

Effective Resolution (3σ)

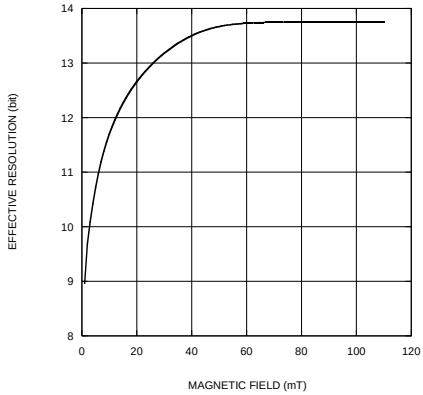

Noise Spectrum at 50mT

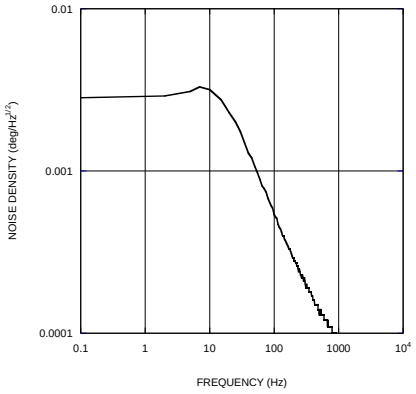

MPS Proprietary Information. Patent Protected. Unauthorized Photocopy and Duplication Prohibited.
© 2022 MPS. All Rights Reserved.

PIN FUNCTIONS

Package Pin #	Name	Description
1	SSD	**Data out (SSI).**
2	A	**Incremental output.**
3	Z	**Incremental output.**
4	MOSI	**Data in (SPI).** MOSI has an internal pull-down resistor.
5	CS	**Chip select (SPI).** CS has an internal pull-up resistor.
6	B	**Incremental output.**
7	MISO	**Data out (SPI).** MISO has an internal pull-down resistor that is enabled at a high impedance state.
8	GND	**Supply ground.**
9	PWM	**PWM output.**
10	TEST	**Factory use only.** Connect TEST to ground.
11	MGL	**Digital output indicating field strength below MGLT level.**
12	SCLK	**Clock (SPI).** Internal pull-down.
13	VDD	**3.3V supply.**
14	NC	**No connection.** Leave NC unconnected.
15	SSCK	**Clock (SSI).** Internal pull-down.
16	MGH	**Digital output indicating field strength above MGHT level.**

MPS Proprietary Information. Patent Protected. Unauthorized Photocopy and Duplication Prohibited.
© 2022 MPS. All Rights Reserved.

BLOCK DIAGRAM

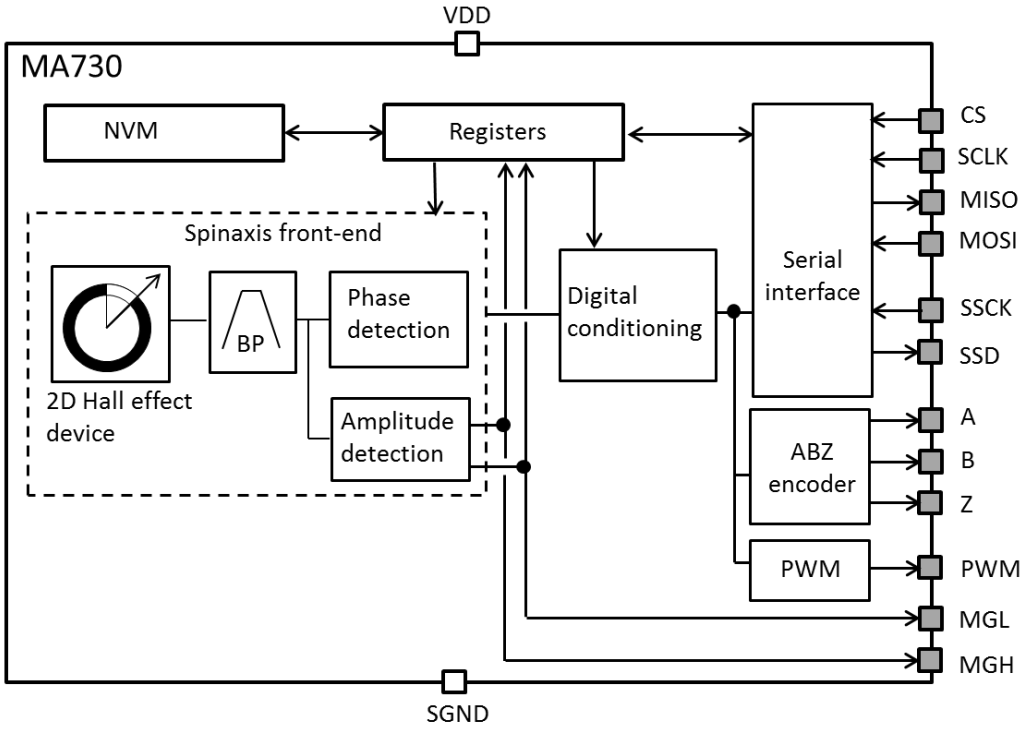

Figure 1: Functional Block Diagram

MPS Proprietary Information. Patent Protected. Unauthorized Photocopy and Duplication Prohibited.
© 2022 MPS. All Rights Reserved.

OPERATION

Sensor Front-End

The magnetic field is detected with integrated Hall devices located in the center of the package. The angle is measured using the *Spin*axis™ method, which digitizes the direction of the field directly without complex arctangent computations or feedback loop-based circuits (interpolators).

The *Spin*axis™ method is based on phase detection and generates a sinusoidal signal with a phase that represents the angle of the magnetic field. The angle is then obtained by a time-to-digital converter, which measures the time between the zero crossing of the sinusoidal signal and the edge of a constant waveform (see Figure 2). The time-to-digital is output from the front-end to the digital conditioning block.

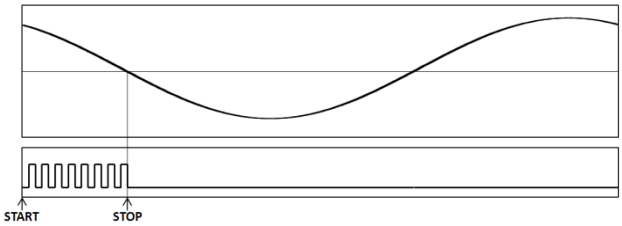

Top: Sine Waveform
Bottom: Clock of Time-to-Digital Converter
Figure 2: Phase Detection Method

The output of the front-end delivers a digital number proportional to the angle of the magnetic field at the rate of 1MHz in a straightforward and open-loop manner.

Digital Filtering

The front-end signal is further treated to achieve the final effective resolution. This treatment does not add any latency in steady conditions. The filter transfer function can be calculated with Equation (1):

$$H(s) = \frac{1 + 2\tau s}{(1 + \tau s)^2} \quad (1)$$

Where τ is the filter time constant related to the cutoff frequency by τ = 0.38/*Fcutoff*. See the General Characteristics table on page 5 for the value of *Fcutoff*.

Sensor – Magnet Mounting

The sensitive volume of the MA730 is confined in a region less than 100µm wide and has multiple integrated Hall devices. This volume is located both horizontally and vertically within 50µm of the center of the QFN package. The sensor detects the angle of the magnetic field projected in a plane parallel to the package's upper surface. This means that the only relevant magnetic field is the in-plane component (X and Y components) in the middle point of the package.

By default, when looking at the top of the package, the angle increases when the magnetic field rotates clockwise. Figure 3 shows the zero angle of the unprogrammed sensor, where the cross indicates the sensitive point. Both the rotation direction and the zero angle can be programmed.

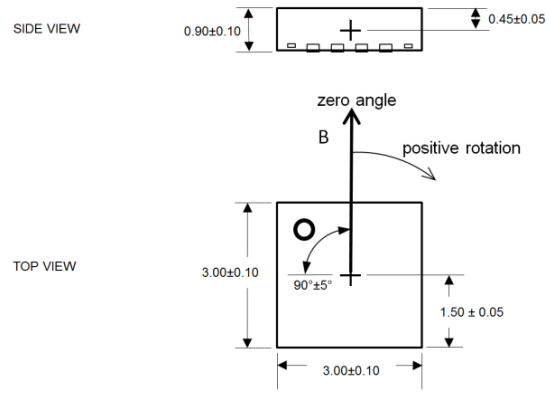

Figure 3: Detection Point and Default Positive Direction

This type of detection provides flexibility for the design of an angular encoder. The sensor only requires the magnetic vector to lie essentially within the sensor plane with a field amplitude of at least 40mT. Note that the MA730 can work with fields smaller than 40mT, but the linearity and resolution performance may deviate from the specifications. The most straightforward mounting method is to place the MA730 sensor on the rotation axis of a permanent magnet (i.e.: a diametrically magnetized cylinder) (see Figure 4). The recommended magnet is a Neodymium alloy (N35) cylinder with dimensions Ø5x3mm inserted into an aluminum shaft with a 1.5mm air gap between the magnet and the sensor (surface of package). For good linearity, the sensor is positioned with a precision of 0.5mm.

MPS Proprietary Information. Patent Protected. Unauthorized Photocopy and Duplication Prohibited.
© 2022 MPS. All Rights Reserved.

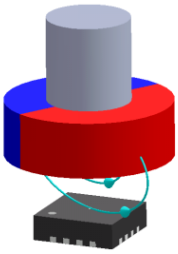

Figure 4: End-of-Shaft Mounting

If the end-of-shaft position is not available, the sensor can be positioned away from the rotation axis of a cylinder or ring magnet (see Figure 5). In this case, the magnetic field angle is no longer directly proportional to the mechanical angle. The MA730 can be adjusted to compensate for this effect and recover the linear relation between the mechanical angle and the sensor output. With multiple pole pair magnets, the MA730 indicates multiple rotations for each mechanical turn.

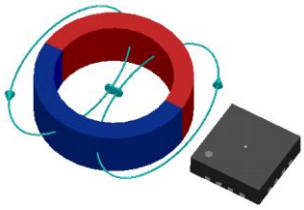

Figure 5: Side-Shaft Mounting

Electrical Mounting and Power Supply Decoupling

It is recommended to place a 1µF decoupling capacitor close to the sensor with a low impedance path to GND (see Figure 6).

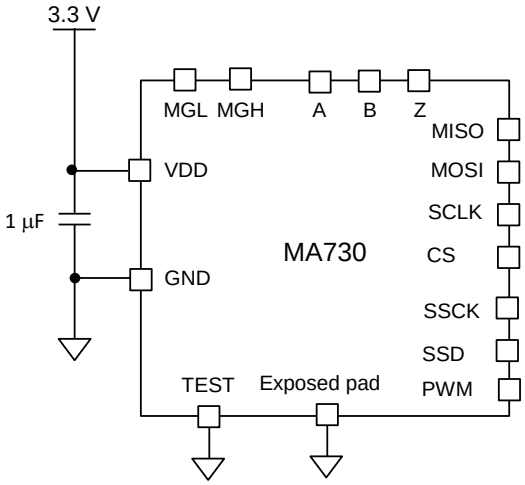

Figure 6: Connection for Supply Decoupling

In general, the MagAlpha works well with or without the exposed pad connected to anything. For optimal conditions (electrically, thermally, and mechanically), it is recommended that the exposed pad be connected to ground.

Serial Interface

The sensor supports the SPI serial interface for angle reading and register programming. Alternatively, the SSI bus can be used for angle reading (programming through SSI is not supported).

SPI

SPI is a four-wire, synchronous, serial communication interface. The MagAlpha supports SPI Mode 3 and Mode 0 (see Table 1 and Table 2). The SPI Mode (0 or 3) is detected automatically by the sensor and therefore does not require any action from the user. The maximum clock rate supported on SPI is 25MHz. There is no minimum clock rate. Note that real-life data rates depend on the PCB layout quality and signal trace length. See Figure 7 and Table 3 for SPI timing.

All commands to the MagAlpha (whether for writing or reading register content) must be transferred through the SPI MOSI pin and must be 16 bits long. See the SPI Communication section on page 13 for details.

Table 1: SPI Specification

	Mode 0	Mode 3
SCLK idle state	Low	High
Data capture	On SCLK rising edge	
Data transmission	On SCLK falling edge	
CS idle state	High	
Data order	MSB first	

Table 2: SPI Standard

	Mode 0	Mode 3
CPOL	0	1
CPHA	0	1
Data order (DORD)	0 (MSB first)	

MPS Proprietary Information. Patent Protected. Unauthorized Photocopy and Duplication Prohibited.
© 2022 MPS. All Rights Reserved.

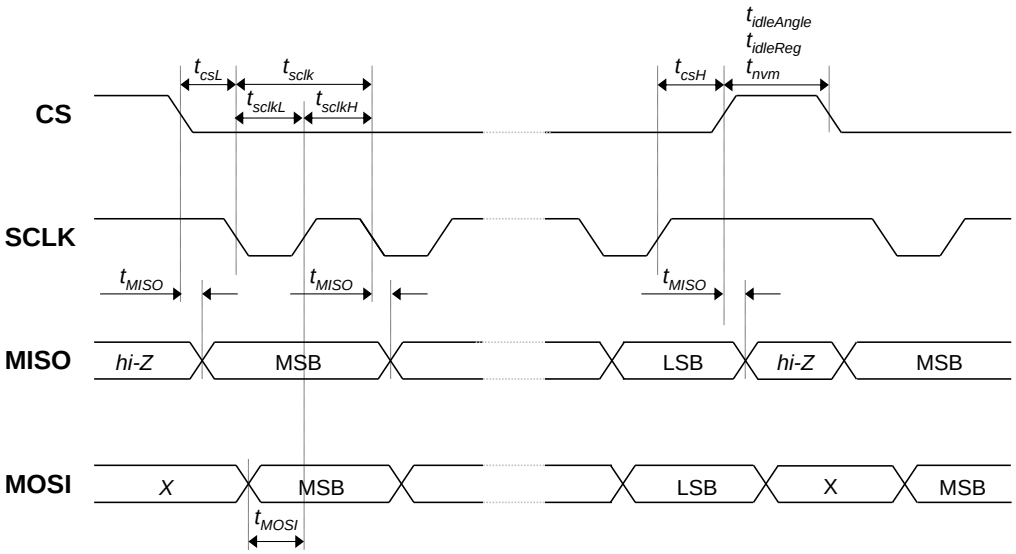

Figure 7: SPI Timing Diagram

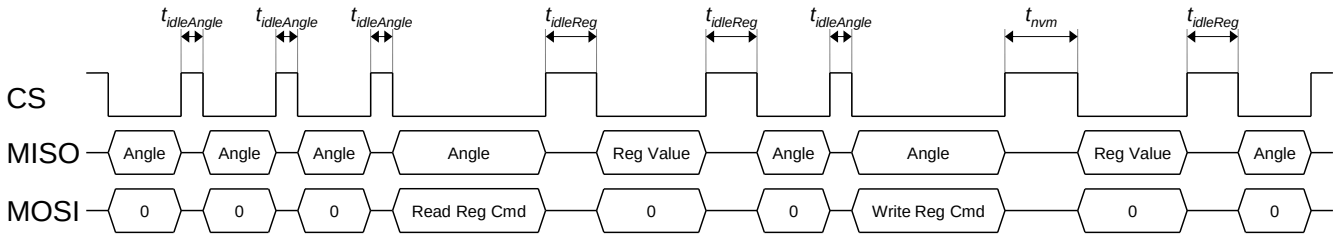

Figure 8: Minimum Idle Time

Table 3: SPI Timing

Parameter (6)	Description	Min	Max	Unit
$t_{idleAngle}$	Idle time between two subsequent angle transmissions	150		ns
$t_{idleReg}$	Idle time before and after a register readout	750		ns
t_{nvm}	Idle time between a write command and a register readout (delay necessary for non-volatile memory update)	20		ms
t_{csL}	Time between CS falling edge and SCLK falling edge	80		ns
t_{sclk}	SCLK period	40		ns
t_{sclkL}	Low level of SCLK signal	20		ns
t_{sclkH}	High level of SCLK signal	20		ns
t_{csH}	Time between SCLK rising edge and CS rising edge	25		ns
t_{MISO}	SCLK setting edge to data output valid		15	ns
t_{MOSI}	Data input valid to SCLK reading edge	15		ns

NOTE:
6) All values are guaranteed by design.

MPS Proprietary Information. Patent Protected. Unauthorized Photocopy and Duplication Prohibited.
© 2022 MPS. All Rights Reserved.

SPI Communication

The sensor supports three types of SPI operation:

- Read angle
- Read configuration register
- Write configuration register

Each operation has a specific frame structure described below.

SPI Read Angle

Every 1µs, new data is transferred into the output buffer. The master device triggers the reading by pulling CS low.

When a trigger event is detected, the data remains in the output buffer until the CS signal is de-asserted (see Table 4).

Table 4: Sensor Data Timing

Event	Action
CS falling edge	Start reading and freeze output buffer
CS rising edge	Release of the output buffer

See Figure 9 for a diagram of a full SPI angle reading. See Figure 10 for a partial SPI angle reading. A full angle reading requires 16 clock pulses. The sensor MISO line returns:

	MSB	LSB
MISO	***Angle(15:0)***	
MOSI	***0***	

The MagAlpha family has sensors with different features and levels of resolution. See the data output length section in the General Characteristics table on page 5 for the number of useful bits delivered at the serial output. If the data length is smaller than 16, the rest of the bits sent are zeros. For example, a data output length of 12 bits means that the serial output delivers a 12-bit angle value with four bits of zeros padded at the end (MISO state remains zero). If the master sends 16 clock counts, the MagApha replies with:

	MSB				LSB
MISO	***Angle(15:4)***	***0***	***0***	***0***	***0***
MOSI	***0***				

Angle reading can be therefore optimized without any loss of information by reducing the number of clock counts. In the case of a 12-bit data output length, only 12 clock counts are required to get the full sensor resolution.

	MSB	LSB
MISO	***Angle(15:4)***	
MOSI	***0***	

If less resolution is needed, the angle can be read by sending even fewer clock counts (since the MSB is first).

In case of fast reading, the MagAlpha continues sending the same data until the data is refreshed. See the refresh rate section in the General Characteristics table on page 5.

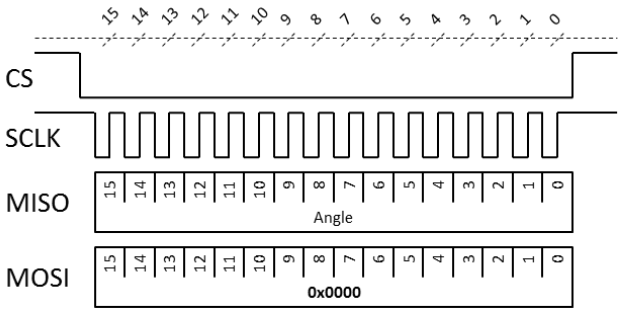

Figure 9: Diagram of a Full 16-Bit SPI Angle Reading

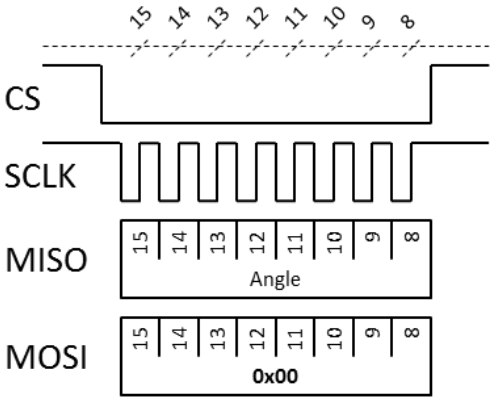

Figure 10: Diagram of a Partial 8-Bit SPI Angle Reading

MPS Proprietary Information. Patent Protected. Unauthorized Photocopy and Duplication Prohibited.
© 2022 MPS. All Rights Reserved.

SPI Read Register

A read register operation is constituted of two 16-bit frames. The first frame sends a read request, which contains the three-bit read command (010) followed by the five-bit register address. The last eight bits of the frame must be all set to zero. The second frame returns the eight-bit register value (MSB byte).

The first 16-bit SPI frame (read request) is:

	MSB															LSB
MISO	Angle(15:0)															
	command			reg. address												
MOSI	0	1	0	A_4	A_3	A_2	A_1	A_0	0	0	0	0	0	0	0	0

The second 16-bit SPI frame (response) is:

	reg. value															
MISO	V_7	V_6	V_5	V_4	V_3	V_2	V_1	V_0	0	0	0	0	0	0	0	0
	MSB															LSB
MOSI	0															

See Figure 11 for a complete transmission overview.

For example, to get the value of the magnetic level high and low flags (MGH and MGL), read register 27 (bit 6, bit 7) by sending the following first frame:

	MSB															LSB
MISO	Angle(15:0)															
	command			reg. address												
MOSI	0	1	0	1	1	0	1	1	0	0	0	0	0	0	0	0

In the second frame, the MagAlpha replies:

	reg. value															
MISO	MGH	MGL	X	X	X	X	X	X	0	0	0	0	0	0	0	0
	MSB															LSB
MOSI	0															

See Figure 12 for a complete example overview.

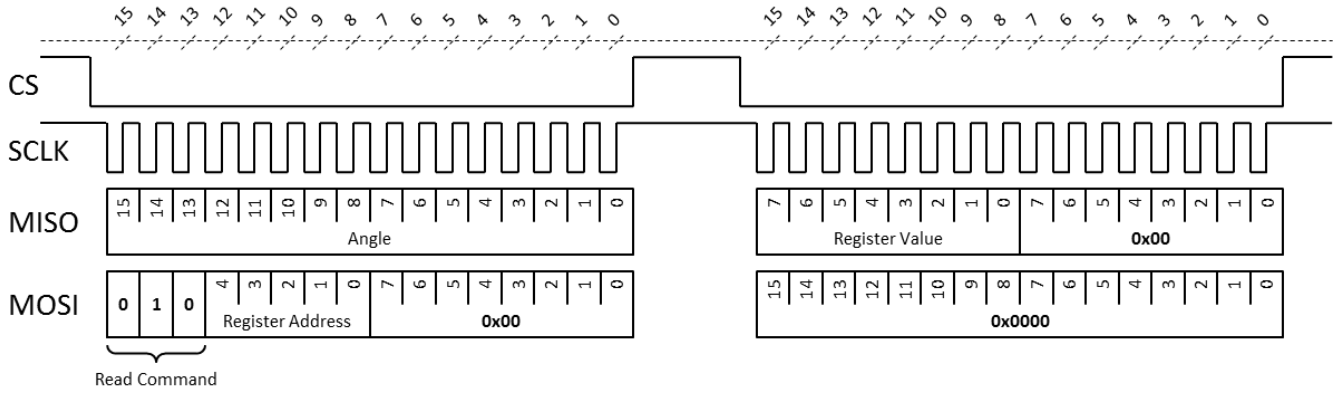

Figure 11: Two 16-Bit Frames Read Register Operation

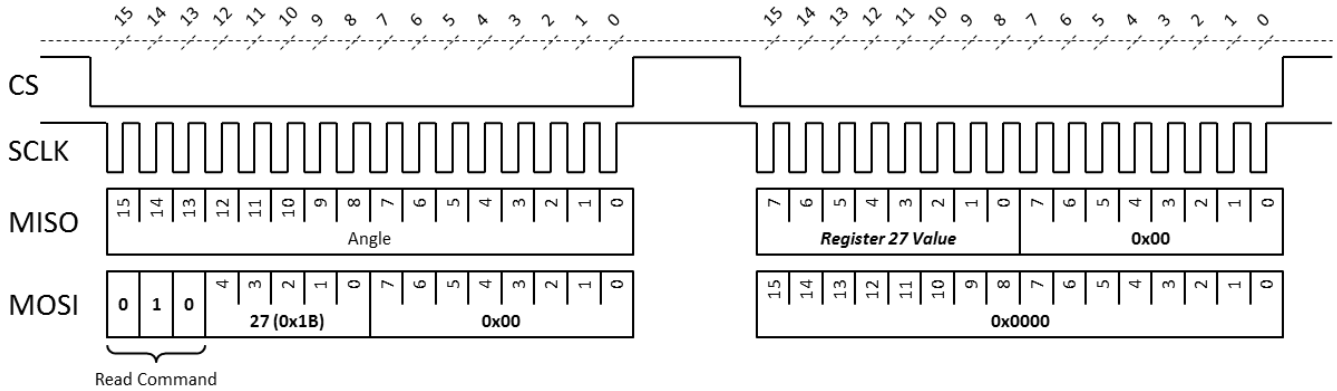

Figure 12: Example Read Magnetic Level Flags High and Low (MGH, MGH) on Register 27, Bit 6 to Bit 7

MPS Proprietary Information. Patent Protected. Unauthorized Photocopy and Duplication Prohibited.
© 2022 MPS. All Rights Reserved.

SPI Write Register

Table 7 shows the programmable 8-bit registers. Data written to these registers are stored in the on-chip non-volatile memory and reloaded at power-on automatically. The factory default register values are shown in Table 8.

A write register operation is constituted of two 16-bit frames. The first frame sends a write request, which contains the 3-bit write command (100) followed by the 5-bit register address and the 8-bit value (MSB first). The second frame returns the newly written register value (acknowledge).

The on-chip memory is guaranteed to endure 1,000 write cycles at 25°C.

It is critical to wait 20ms between the first and second frame. This is the time taken to write the non-volatile memory. Failure to implement this wait period results in the register's previous value being read. Note that this delay is only required after a write request. A read register request and read angle do not require this wait time.

The first 16-bit SPI frame (write request) is:

	MSB															LSB
MISO	Angle(15:0)															
	command			reg. address					reg. value							
MOSI	1	0	0	A_4	A_3	A_2	A_1	A_0	V_7	V_6	V_5	V_4	V_3	V_2	V_1	V_0

The second 16-bit SPI frame (response) is:

	reg. value															
MISO	V_7	V_6	V_5	V_4	V_3	V_2	V_1	V_0	0	0	0	0	0	0	0	0

	MSB	LSB
MOSI	0	

The readback register content can be used to verify the register programming. See Figure 13 for a complete transmission overview.

For example, to set the value of the output rotation direction (RD) to counterclockwise (high), write register 9 by sending the following first frame:

	MSB															LSB
MISO	Angle(15:0)															
	command			reg. address					reg. value							
MOSI	1	0	0	0	1	0	0	1	1	0	0	0	0	0	0	0

Send the second frame after a 20ms wait time (see Figure 8). If the register is written correctly, the reply is:

	reg. value															
MISO	1	0	0	0	0	0	0	0	0	0	0	0	0	0	0	0

	MSB	LSB
MOSI	0	

See Figure 14 for a complete example.

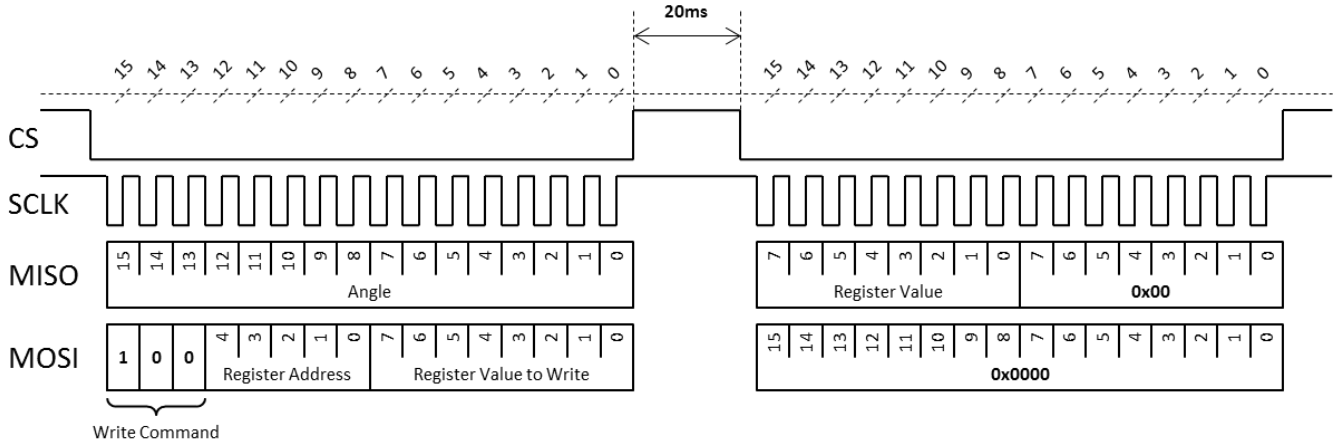

Figure 13: Overview of Two 16-Bit Frames Write Register Operation

MPS Proprietary Information. Patent Protected. Unauthorized Photocopy and Duplication Prohibited.
© 2022 MPS. All Rights Reserved.

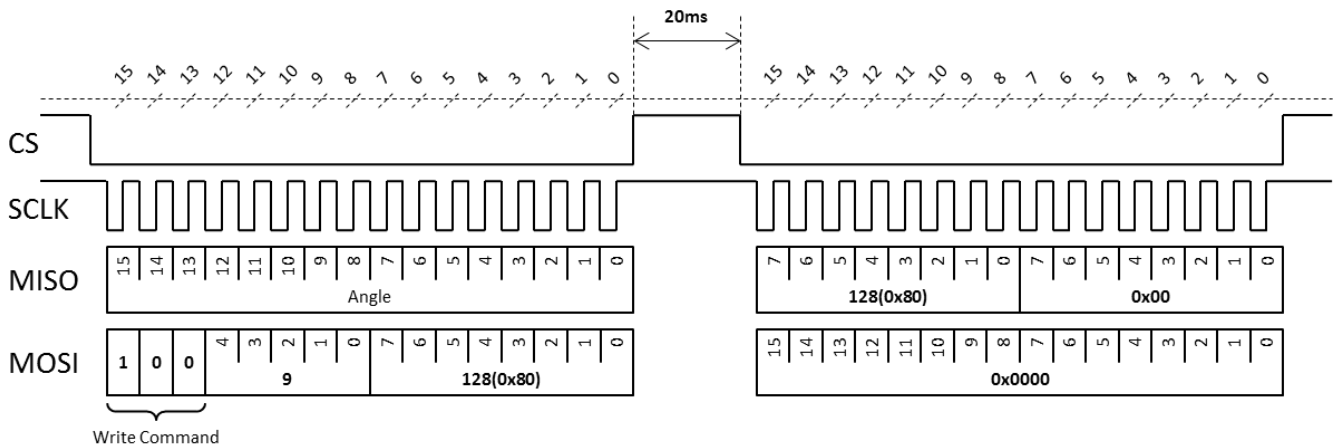

Figure 14: Example Write Output Rotation Direction (RD) to Counterclockwise (High), on Register 9, Bit 7

SSI

The SSI is a 2-wire synchronous serial interface for data reading only. The sensor operates as a slave to the external SSI master and only supports angle reading. It is not possible to read or write registers using SSI.

SSI Communication

Unlike SPI, the sensor SSI only supports angle reading operation. It is not possible to read or write registers using the SSI. Figure 15 and Table 5 show the SSI timing communication.

The SSI implemented in this sensor is different from the standard SSI. For this reason, it may not work with regular SSI devices.

This sensor uses an SSI with a low SSCK idle state instead of the high SSCK idle state used in the standard protocol. This sensor also requires a dummy rising edge on the SSCK signal at the beginning of the SSI frame, while the standard SSI does not.

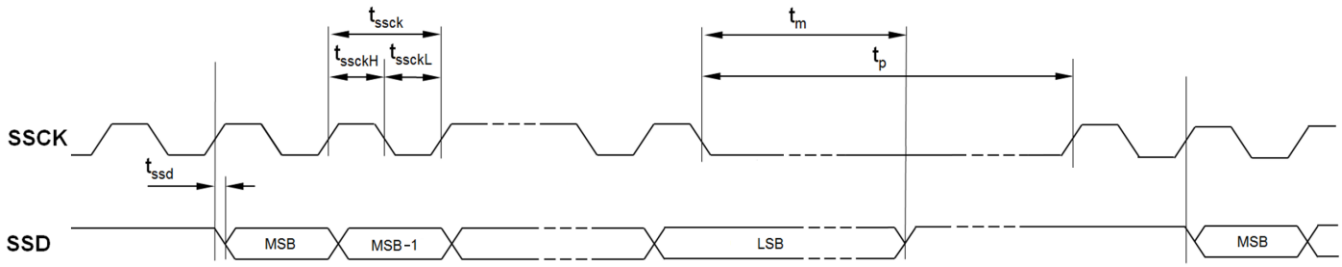

Figure 15: SSI Timing

Table 5: SSI Timing

Parameter	Description	Min	Max	Unit
t_{ssd}			15	ns
t_{ssck}	SSCK period	0.2	16	µs
t_{ssckL}	Low level of SSCK signal	0.1	8	µs
t_{ssckH}	High level of SSCK signal	0.1	8	µs
t_m	Transfer timeout (monoflop time)	25		µs
t_p	Dead time: SSCK high time for next data reading	40		µs

MPS Proprietary Information. Patent Protected. Unauthorized Photocopy and Duplication Prohibited.
© 2022 MPS. All Rights Reserved.

SSI Read Angle

The bit order of the transmitted data is MSB first and LSB last. Every 1µs, new data is transferred into the output buffer. The master device triggers the reading by driving SSCK high. A full reading requires up to 17 clock counts (see Figure 16).

The first clock is a dummy clock to start the transmission. The data length is up to 16 bits long. See the data output length section in the General Characteristics table on page 5 for the number of useful bits delivered at the serial output.

The first data MSB is transmitted on the second clock count. If the data length is less than 16, the 16-bit output word is completed by zeros. Therefore, the reading can also be performed with fewer than 16 clock counts. For example, for a part with a 12-bit data length, it is only necessary to send the first dummy clock to start the transmission plus 12 clocks to read the angle data.

When a trigger event is detected, the data remains in the output buffer until the clock falling edge for the LSB bit 0 and the transfer timeout time has passed (see Table 6).

Table 6: Sensor Data Timing

Trigger event	Release of the output buffer
First SSCK pulse rising edge	SSCK falling edge + time out t_m (Fig 15)

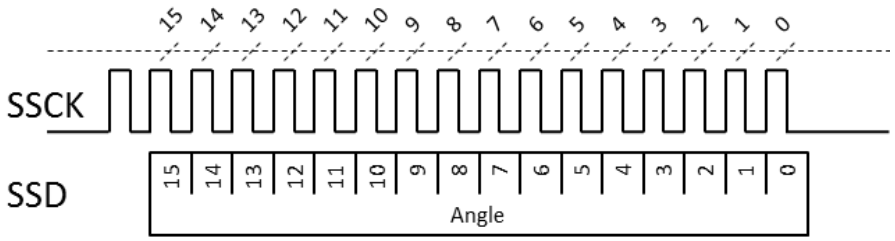

Figure 16: Diagram of a Full 16-Bit SSI Angle Reading (with First Dummy Clock)

For consecutive angle readings, see the timing diagram in Figure 17.

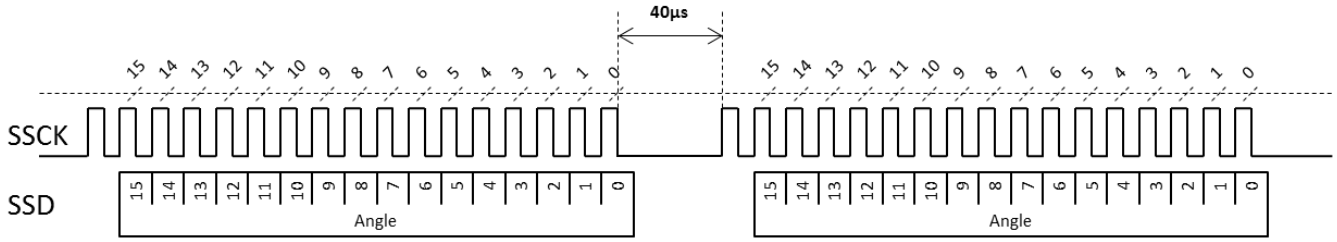

Figure 17: Diagram of Two Consecutive 16-Bit SSI Angle Reading with the Required Dead Time between the Frames

MPS Proprietary Information. Patent Protected. Unauthorized Photocopy and Duplication Prohibited.
© 2022 MPS. All Rights Reserved.

REGISTER MAP

Table 7: Register Map

No	Hex	Bin	Bit 7 MSB	Bit 6	Bit 5	Bit 4	Bit 3	Bit 2	Bit 1	Bit 0 LSB
0	0x0	00000	Z(7:0)							
1	0x1	00001	Z(15:8)							
2	0x2	00010	BCT(7:0)							
3	0x3	00011	-	-	-	-	-	-	ETY	ETX
4	0x4	00100	PPT(1:0)		ILIP(3:0)				-	-
5	0x5	00101	PPT(9:2)							
6	0x6	00110	MGLT(2:0)			MGHT(2:0)			-	-
9	0x9	01001	RD	-	-	-	-	-	-	-
27	0x1B	11011	MGH	MGL	-	-	-	-	-	-

Table 8: Factory Default Values

No	Hex	Bin	Bit 7 MSB	Bit 6	Bit 5	Bit 4	Bit 3	Bit 2	Bit 1	Bit 0 LSB
0	0x0	00000	0	0	0	0	0	0	0	0
1	0x1	00001	0	0	0	0	0	0	0	0
2	0x2	00010	0	0	0	0	0	0	0	0
3	0x3	00011	0	0	0	0	0	0	0	0
4	0x4	00100	1	1	0	0	0	0	0	0
5	0x5	00101	1	1	1	1	1	1	1	1
6	0x6	00110	0	0	0	1	1	1	0	0
9	0x9	01001	0	0	0	0	0	0	0	0

Table 9: Programming Parameters

Parameters	Symbol	Number of Bits	Description	See Table
Zero setting	Z	16	Set the zero position	10
Bias current trimming	BCT	8	For side-shaft configuration: reduce the bias current of the X or Y Hall device	13
Enable trimming X	ETX	1	Biased current trimmed in the X direction Hall device	14
Enable trimming Y	ETY	1	Biased current trimmed in the Y direction Hall device	14
Pulses per turn	PPT	10	Number of pulses per turn of the ABZ output	17
Index length / index position	ILIP	4	Parametrization of the ABZ index pulse	Fig 26
Magnetic field high threshold	MGHT	3	Sets the field strength high threshold	16
Magnetic field low threshold	MGLT	3	Sets the field strength low threshold	16
Rotation direction	RD	1	Determines the sensor positive direction	12

MPS Proprietary Information. Patent Protected. Unauthorized Photocopy and Duplication Prohibited.
© 2022 MPS. All Rights Reserved.

REGISTER SETTINGS

Zero Setting

The zero position of the MagAlpha ($a_0 a_0$) can be programmed with 16 bits of resolution. The angle streamed out by the MagAlpha (a_{out}) is given by Equation (2):

$$a_{out} = a_{raw} - a_0 \quad (2)$$

Where a_{raw} is the raw angle provided by the MagAlpha front-end.

The parameter Z(15:0), which is zero by default, is the complementary angle of the zero setting. It can be written in decimals using Equation (3):

$$a_0 = 2^{16} - Z(15:0) \quad (3)$$

Table 10 shows the zero setting parameter.

Table 10: Zero Setting Parameter

Z(15:0)	Zero pos. a_0 16-bit (dec)	Zero pos. a_0 (deg)
0	65536	360.000
1	65535	359.995
2	65534	359.989
…	…	…
65534	2	0.011
65535	1	0.005

Example

To set the zero position to 20 degrees, the Z(15:0) parameter must be equal to the complementary angle and can be calculated with Equation (4):

$$Z(15:0) = 2^{16} - \frac{20\deg}{360\deg} 2^{16} = 61895 \quad (4)$$

In binary, this is written as 1111 0001 1100 0111.

Table 11 shows the content of registers 0 and 1.

Table 11: Register 0 and 1 Content

Reg	Bit 7	Bit 6	Bit 5	Bit 4	Bit 3	Bit 2	Bit 1	Bit 0
0	1	1	0	0	0	1	1	1
1	1	1	1	1	0	0	0	1

Rotation Direction

By default, when looking at the top of the package, the angle increases when the magnetic field rotates clockwise (CW) (see Figure 18 and Table 12).

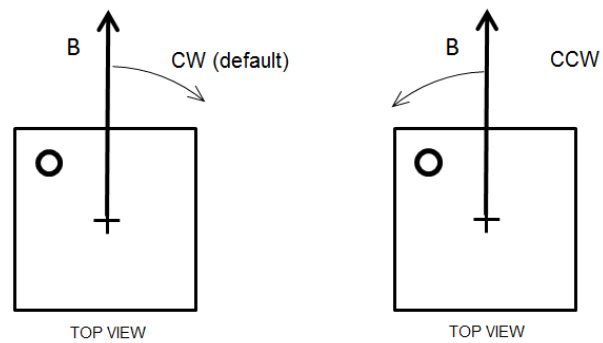

Figure 18: Positive Rotation Direction of the Magnetic Field

Table 12: Rotation Direction Parameter

RD	Positive Direction
0	Clockwise (CW)
1	Counterclockwise (CCW)

BCT Settings (Bias Current Trimming)

Side Shaft

When the MA730 is mounted on the side of the magnet, the relation between the field angle and the mechanical angle is no longer directly linear. This effect is related to the fact that the tangential magnetic field is usually smaller than the radial field. Define the field ratio *k* with Equation (5):

$$k = B_{rad} / B_{\tan} \quad (5)$$

Where B_{rad} and B_{tan} are the maximum radial and tangential magnetic fields (see Figure 19).

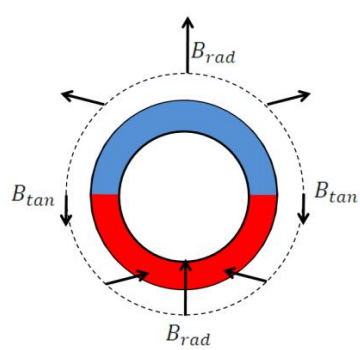

Figure 19: Side-Shaft Field

MPS Proprietary Information. Patent Protected. Unauthorized Photocopy and Duplication Prohibited.
© 2022 MPS. All Rights Reserved.

The ratio *k* depends on the magnet geometry and the distance to the sensor. Having a *k* ratio different from one results in the sensor output response not being linear with respect to the mechanical angle. Note that the error curve has the shape of a double sinewave (see Figure 21). E is the amplitude of this error.

The X-axis or the Y-axis bias current can be reduced in order to recover an equal Hall signal for all angles and therefore suppress the error. The parameters ETX and ETY control the direction in which sensitivity is reduced. The current reduction is set by the parameter bias current trimming BCT(7:0), which is an integer from 0 to 255.

In side-shaft configuration (i.e.: the sensor center is located beyond the magnet outer diameter), *k* is greater than one. For optimum compensation, the sensitivity of the radial axis should be reduced by setting the BCT parameter as shown in Equation (6):

$$BCT(7:0) = 258\left(1 - \frac{1}{k}\right) \quad (6)$$

The graph in Figure 20 shows the optimum BCT value for a particular *k* ratio.

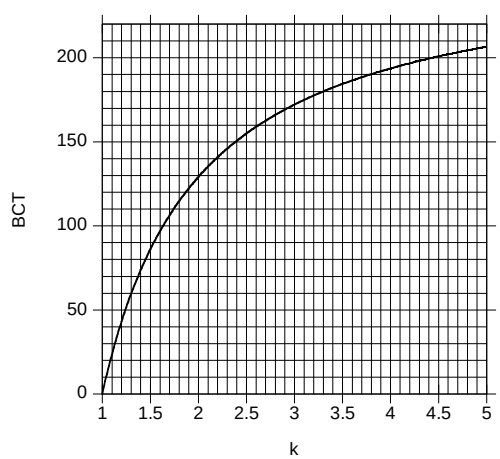

Figure 20: Relation between the *k* Ratio and the Optimum BCT to Recover Linearity

Table 13 shows some typical BCT values.

Table 13: Example of BCT Settings

E (deg)	Magnet Ratio (*k*)	BCT(7:0)
0	1.0	0
11.5	1.5	86
19.5	2.0	129
25.4	2.5	155
30.0	3.0	172
33.7	3.5	184
36.9	4.0	194
39.5	4.5	201
41.8	5.0	207

Determining k with the MagAlpha

It is possible to deduce the *k* ratio from the error curve obtained with the default BCT setting (BCT = 0). For this purpose, rotate the magnet over one revolution and record the MagAlpha output. Then plot the error curve (the MagAlpha output minus the real mechanical position vs. the real mechanical position) and extract two parameters: the maximum error (E) and the position of this maximum with respect to a zero crossing a_m (see Figure 21). *k* can be calculated with Equation (7):

$$k = \frac{\tan(E + a_m)}{\tan(a_m)} \quad (7)$$

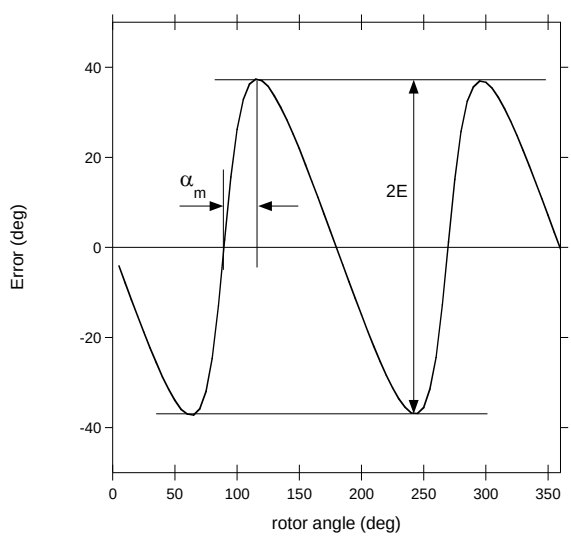

Figure 21: Error Curve in Side-Shaft Configuration with BCT = 0

Some examples are given in Table 13. Alternatively, the *k* parameter can be obtained from the graph in Figure 22.

MPS Proprietary Information. Patent Protected. Unauthorized Photocopy and Duplication Prohibited.
© 2022 MPS. All Rights Reserved.

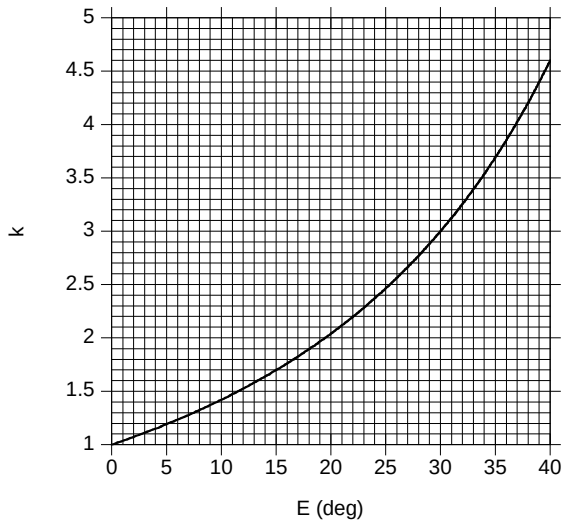

Figure 22: Relation between the Error Measured with BCT = 0 and the Magnet Ratio *k*

Sensor Orientation

The dot marked on the package shows whether the radial field is aligned with the sensor coordinate X or Y (see Figure 23).

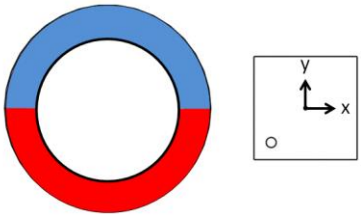

Figure 23: Package Top View with X and Y Axes

Determine which axis needs to be reduced (see the qualitative field distribution around a ring in Figure 19). For instance, with the arrangement depicted in Figure 23, the field along the sensor Y direction is tangential and weaker. The X-axis should be reduced (ETX = 1 and ETY = 0). Note that if both ETX and ETY are set to 1, the current bias is reduced in both directions the same way (i.e.: without side-shaft correction) (see Table 14).

Table 14: Trimming Direction Parameters

ETX	Enable Trimming of the X Axis
0	Disabled
1	Enabled
ETY	**Enable Trimming of the Y Axis**
0	Disabled
1	Enabled

Magnetic Field Thresholds

The magnetic flags (MGL and MGH) indicate that the magnetic field at the sensor position is out of a range defined by the lower (MGLT) and upper magnetic field thresholds (MGHT) (see Figure 24).

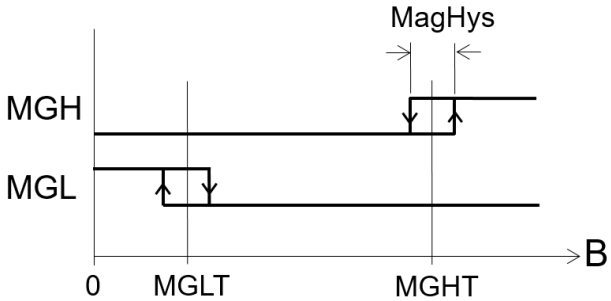

Figure 24: MGH and MGL Signals as a Function of the Field Strength

MagHys, the typical hysteresis on the signals MGH and MGL is 6mT. The MGLT and MGHT thresholds are coded on three bits and stored in register 6 (see Table 15).

Table 15: Register 6

Register 6							
Bit 7	Bit 6	Bit 5	Bit 4	Bit 3	Bit 2	Bit 1	Bit 0
MGLT			MGHT			-	-

The 3-bit values of MGLT and MGHT correspond to the magnetic field (see Table 16).

Table 16: MGLT and MGHT Binary to mT Relation

MGLT or MGHT (8)	Field threshold in mT (7)	
	From low to high magnetic field	From high to low magnetic field
000	26	20
001	41	35
010	56	50
011	70	64
100	84	78
101	98	92
110	112	106
111	126	120

NOTES:

7) Valid for VDD = 3.3V. If different, then the field threshold is scaled by the factor VDD/3.3V.
8) MGLT can have a larger value than MGHT.

The alarm flags MGL and MGH can be read in register 27 (bit 6 and bit 7), and their logic state is also given at the digital output pins 11 and 16.

MPS Proprietary Information. Patent Protected. Unauthorized Photocopy and Duplication Prohibited.
© 2022 MPS. All Rights Reserved.

To read the MGL and MGH flags via the SPI, send the 8-bit write command to register 27:

command			*reg. address*					*MSB*			*value*				*LSB*
0	*1*	*0*	*1*	*1*	*0*	*1*	*1*	*0*	*0*	*0*	*0*	*0*	*0*	*0*	*0*

The MA730 answers with the register 27 content in the next transmission:

Register 27 [7:0]							
MGH	**MGL**	x	x	**MG1L**	**MG2L**	x	x

The logic state of the MGL and MGH flags has no effect on the angle output.

MGL Application Note

Pulses with a duration of about 1.3µs to 1.5µs appear randomly in the MGL signal. They appear on both the pin and register values (Register 27, bit 6).

These pulses appear around angle values of 44, 138, 224, and 318 degrees (sensor output) or in an interval of ±1.5 degree around these values. These pulses have an amplitude of 3.3V (VDD). The minimum interval between two pulses is 100µs.

MGL Workarounds

1. Invert the MGH signal to replace MGL. The MGL and MGH magnetic thresholds only differ by a small hysteresis (see Table 16 on page 21). An inverted MGH signal can be used to replace the MGL output in the application.
2. Read the MGL signal level twice. Using two readings, which must be between 2µs and 100µs apart, allows the user to distinguish erroneous from real transitions. Table 17 shows examples of different cases.
3. Read register 27 with the SPI and compute a corrected MGL value using MG1L and MG2L. The corrected MGL signal = NOT (MG1L OR MG2L). This means that not corrected MGL must be set to 1 only when both MG1L and MG2L are equal to 0. See the C implementation below:

```
correctedMGL = !(MG1L | MG2L)
```

Table 17: MGL Multiple Reading Workaround

	MGL First Reading	MGL Second Reading (e.g. 20µs After the First Reading)	True MGL Value
Case 1	0	Second reading is not needed	0
Case 2	1	1	1
Case 3	1	0	0

ABZ Incremental Encoder Output

The MA730 ABZ output emulates a 12-bit incremental encoder (such as an optical encoder) providing logic pulses in quadrature (see Figure 25). Compared to signal A, signal B is shifted by a quarter of the pulse period. Over one revolution, signal A pulses *n* times, where *n* is programmable from 1 to 1024 pulses per revolution. The number of pulses per channel per revolution is programmed by setting the parameter PPT, which consists of 8 bits split between registers 0x4 and 0x5 (see Table 7). The factory default value is 1023. Table 18 describes how to program PPT(9:0) to set the required resolution.

Table 18: PPT

PPT(9:0)	Pulses per Revolution	Edges per Revolution	
0000000000	1	4	MIN
0000000001	2	8	
0000000010	3	12	
0000000011	4	16	
…	…	…	…
1111111100	1021	4084	
1111111101	1022	4088	
1111111110	1023	4092	
1111111111	1024	4096	MAX

For example, to set 120 pulses per revolution (i.e. 480 edges), set PPT to 120 - 1 = 119 (binary: 0001110111). Table 19 shows how registers 4 and 5 must be set.

Table 19: Example PPT Setting for 120 Pulses

	B7	B6	B5	B4	B3	B2	B1	B0
R4	1	1	0	0	0	0	0	0
R5	0	0	0	1	1	1	0	1

MPS Proprietary Information. Patent Protected. Unauthorized Photocopy and Duplication Prohibited.
© 2022 MPS. All Rights Reserved.

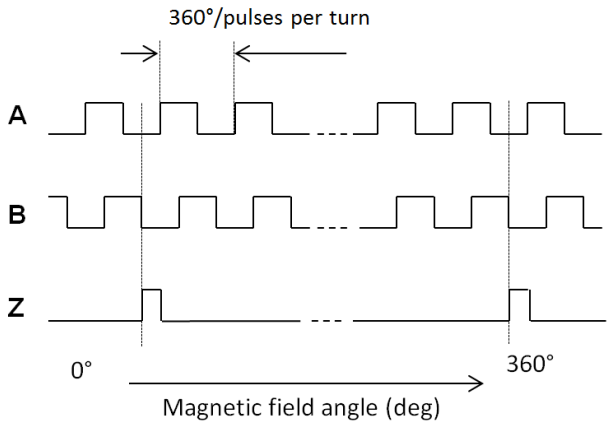

Figure 25: Timing of the ABZ Output

Signal Z (zero or index) raises only once per turn at the zero-angle position.

The position and length of the Z pulse is programmable via bits ILIP[3:0] in register 0x4 (see Figure 26).

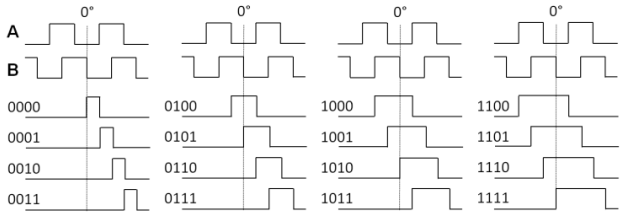

Figure 26: ILIP Parameter Effect on Index Shape

By default, the ILIP parameter is 0000. The index rising edge is aligned with the channel B falling edge. The index length is half the A or B pulse length.

ABZ Hysteresis

A hysteresis larger than the output noise is introduced on the ABZ output to prevent any spurious transitions (see Figure 27).

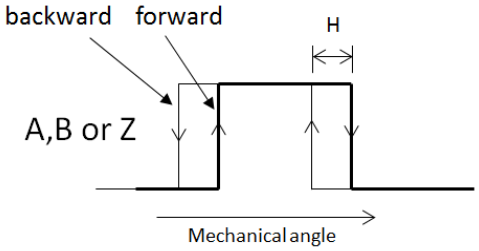

Figure 27: Hysteresis of the Incremental Output

ABZ Jitter

The ABZ state is updated at a frequency of 16MHz, enabling accurate operation up to a very high rpm (above 10^5 rpm).

The jitter characterizes how far a particular ABZ edge can occur at an angular position different from the ideal position (see Figure 28).

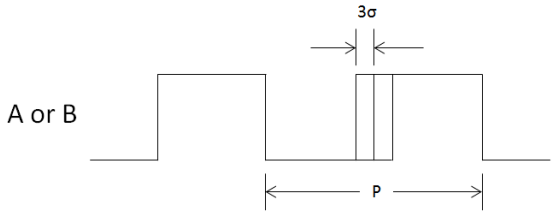

Figure 28: ABZ Jitter

The measurable jitter is composed by a systematic jitter (i.e. always the same deviation at a given angle) and a random jitter.

The random jitter reflects the sensor noise. Therefore, the edge distribution is the same as the SPI output noise. Like the sensor resolution, it is defined as the 3σ width of this distribution.

In fact, the random jitter is a function of the rotation speed. At a lower speed, the random jitter is smaller than the sensor noise.

This is a consequence of the fact that the probability of measuring an edge at a certain distance from the ideal position depends on the number of ABZ updates at this position.

The minimum field for ABZ reading is 40mT.

MPS Proprietary Information. Patent Protected. Unauthorized Photocopy and Duplication Prohibited.
© 2022 MPS. All Rights Reserved.

PWM Absolute Output

This output provides a logic signal with a duty cycle proportional to the angle of the magnetic field. The PWM frequency is indicated in the General Characteristics table on page 5. The duty cycle is bounded by a minimum value (1/514 of the period) and a maximum value (513/514 of the period), so the duty cycle varies from 1/514 to 513/514 with a resolution of 14 bits (see Figure 29). The angle can be retrieved by measuring the on time. Since the absolute PWM frequency can vary from chip to chip or with the temperature, accurate angle detection requires the measurement of the duty cycle (i.e.: the measurement of both the on time (t_{on}) and the off time (t_{off})). The angle can be calculated with Equation (8):

$$angle(in\,\deg) = \frac{360}{512}\left(514\frac{t_{ON}}{t_{ON}+t_{OFF}} - 1\right) \quad (8)$$

Figure 29 shows one period of the PWM signal. The period (T) is $1/F_{PWM}$, where F_{PWM} is the PWM frequency indicated in the general characteristic table.

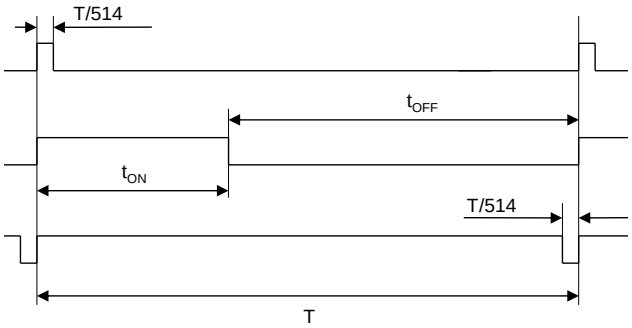

Top Signal: 0°
Bottom Signal: Full Scale (i.e.: 360°(1-1/16384))
Figure 29: PWM Output Timing

MPS Proprietary Information. Patent Protected. Unauthorized Photocopy and Duplication Prohibited.
© 2022 MPS. All Rights Reserved.

TYPICAL APPLICATION CIRCUITS

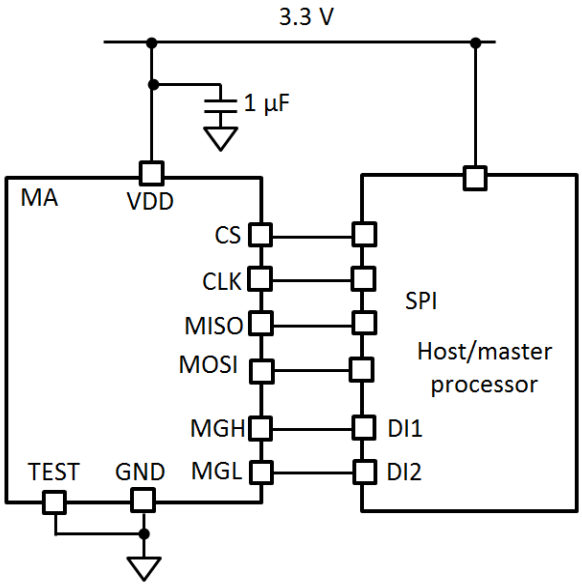

Figure 30: Typical Configurations Using SPI Interface and MGH/MGL Signals

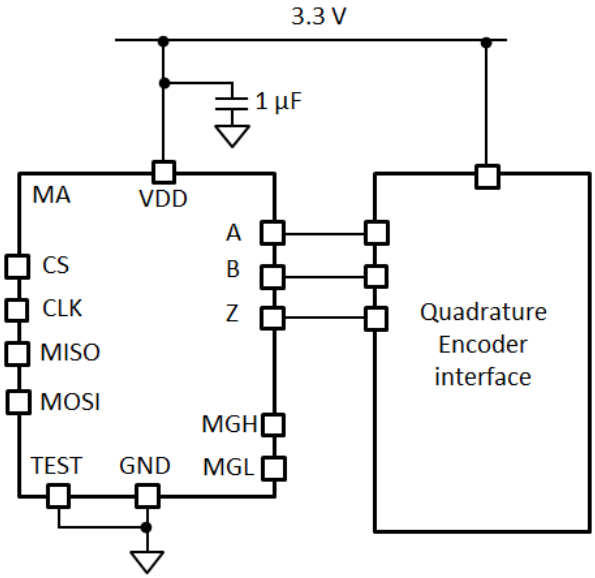

Figure 31: Typical Configuration Using ABZ Interface

MPS Proprietary Information. Patent Protected. Unauthorized Photocopy and Duplication Prohibited.
© 2022 MPS. All Rights Reserved.

PACKAGE INFORMATION

QFN-16 (3mmx3mm)

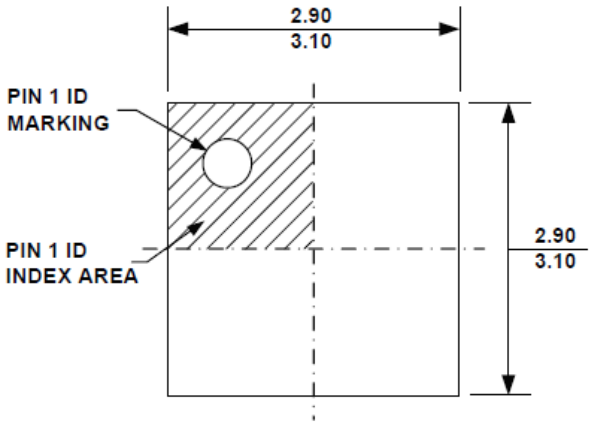

TOP VIEW

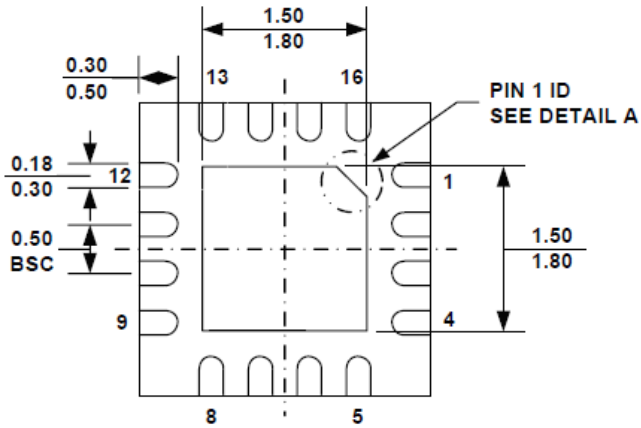

BOTTOM VIEW

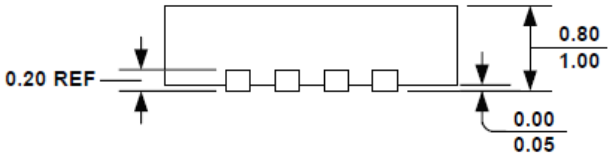

SIDE VIEW

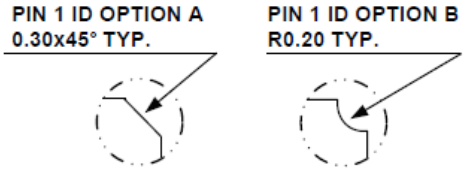

DETAIL A

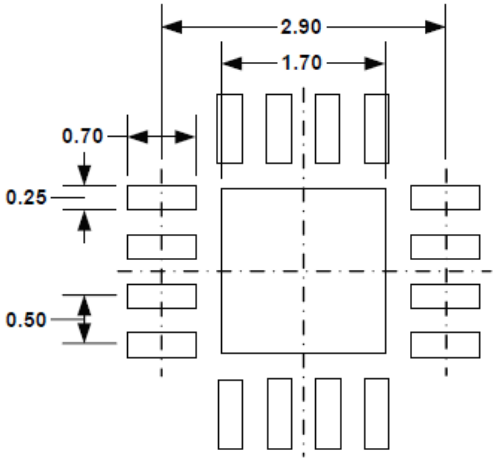

RECOMMENDED LAND PATTERN

NOTE:

1) ALL DIMENSIONS ARE IN MILLIMETERS.
2) EXPOSED PADDLE SIZE DOES NOT INCLUDE MOLD FLASH.
3) LEAD COPLANARITY SHALL BE 0.10 MILLIMETER MAX.
4) DRAWING CONFORMS TO JEDEC MO-220, VARIATION VEED-4.
5) DRAWING IS NOT TO SCALE.

MPS Proprietary Information. Patent Protected. Unauthorized Photocopy and Duplication Prohibited.
© 2022 MPS. All Rights Reserved.

APPENDIX A: DEFINITIONS

Effective Resolution (3σ noise level)

Smallest angle increment distinguishable from the noise. The resolution is measured by computing three times σ (the standard deviation in degrees) taken over 1,000 data points at a constant position. The resolution in bits is obtained with $\log_2(360/6\sigma)$.

Refresh Rate

Rate at which new data points are stored in the output buffer.

ABZ Update Rate

Rate at which a new ABZ state is computed. The inverse of this rate is the minimum time between two ABZ edges.

Latency

Time elapsed between the instant when the data is ready to be read and the instant at which the shaft passes that position. The lag in degrees is $lag = latency \cdot v$, where v is the angular velocity in deg/s.

Power-Up Time

Time until the sensor delivers valid data starting at power-up.

Integral Non-Linearity (INL)

Maximum deviation between the average sensor output (at a fixed position) and the true mechanical angle (see Figure A1).

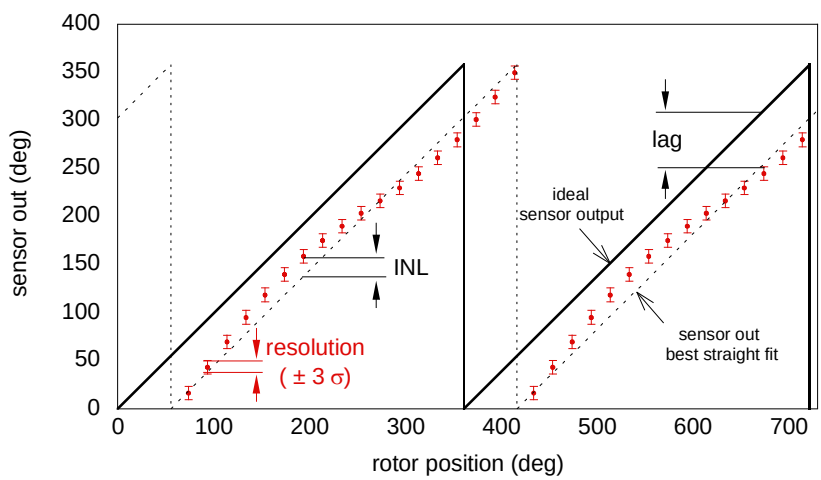

Figure A1: Resolution, INL, Lag

INL can be obtained from the error curve *err(a) = out(a) - a*, where *out(a)* is the average over 1000 sensor output, and *a* is the mechanical angle indicated by a high precision encoder (<0.001 deg). INL is then calculated with Equation (A1):

$$INL = \frac{\max(err(a)) - \min(err(a))}{2} \quad \text{(A1)}$$

Drift

Angle variation rate when one parameter is changed (e.g.: temperature, VDD) and all the others, including the shaft angle, are maintained constant.

MPS Proprietary Information. Patent Protected. Unauthorized Photocopy and Duplication Prohibited.
© 2022 MPS. All Rights Reserved.

APPENDIX B: SPI COMMUNICATION CHEATSHEET

Read Angle

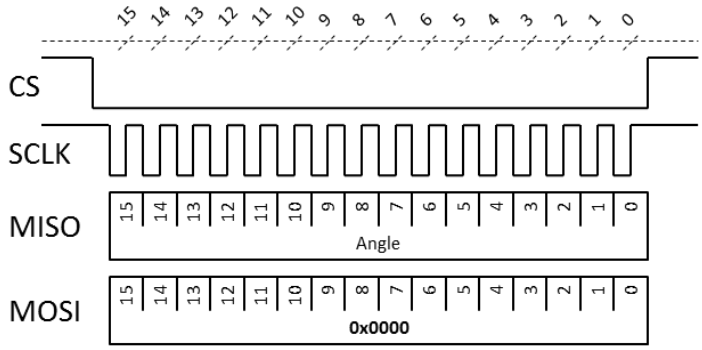

Read Register

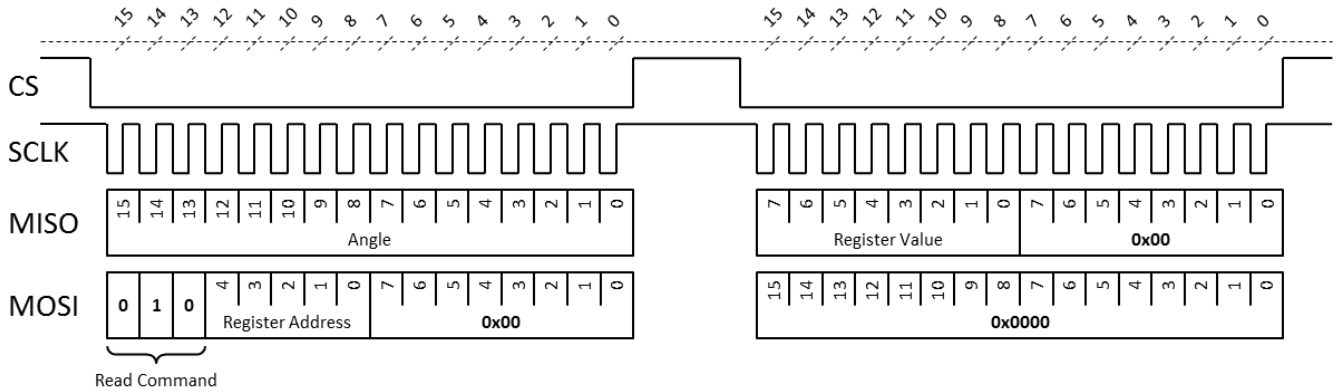

Write Register

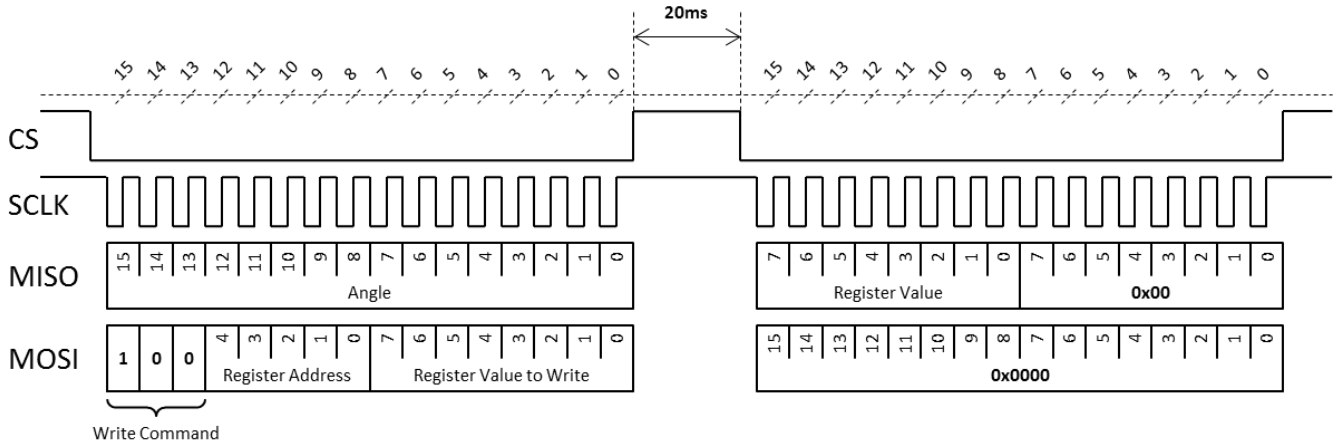

MPS Proprietary Information. Patent Protected. Unauthorized Photocopy and Duplication Prohibited.
© 2022 MPS. All Rights Reserved.

REVISION HISTORY

Revision #	Revision Date	Description	Pages Updated
1.0	9/27/2017	Initial Release	-
1.01	10/13/2017	Removed the “2” in the denominator in Equation (1).	10
		Removed the “[]” after “Bit” in Table 11.	20
		Removed the “[]” after “Bit” in Table 15.	22
1.1	8/8/2022	Updated legal notice.	1
		Updated orderable suffix from “–Z” to “-Z”.	2
		Added pull-up resistor in General Characteristics table.	6
		Update Non-Linearity and ABZ Jitter plots.	7
		Updated page headers.	10–11
		Add information regarding the non-standard SSI interface in the SSI Communication section.	16
		Updated minimum SSI limits for SSCK period, Low level of SSCK signal, and High level of SSCK signal in Table 5.	16
		Updated Figure 24.	21
		Added MGL application details, MGL Workarounds section, and Table 15.	22
		Updated ABZ Incremental Encoder Output section.	22–23
		Minor formatting updates.	All

Notice: The information in this document is subject to change without notice. Users should warrant and guarantee that third-party Intellectual Property rights are not infringed upon when integrating MPS products into any application. MPS will not assume any legal responsibility for any said applications.

MPS Proprietary Information. Patent Protected. Unauthorized Photocopy and Duplication Prohibited.
© 2022 MPS. All Rights Reserved.