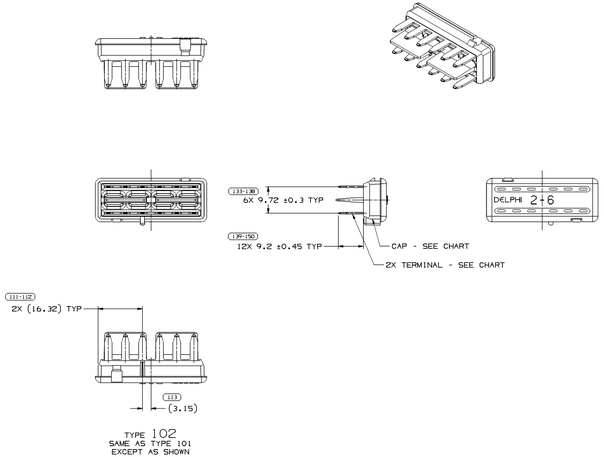

TYPE 102
SAME AS TYPE 101
EXCEPT AS SHOWN

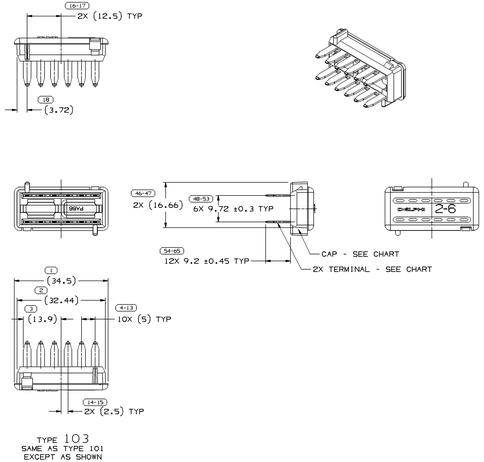

TYPE 103
SAME AS TYPE 101
EXCEPT AS SHOWN

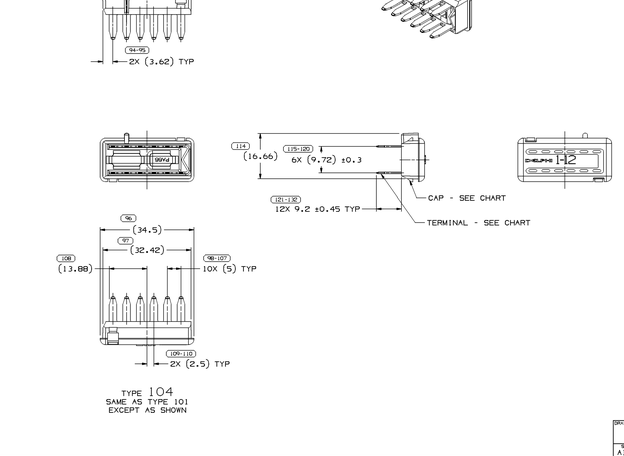

TYPE 104
SAME AS TYPE 101
EXCEPT AS SHOWN

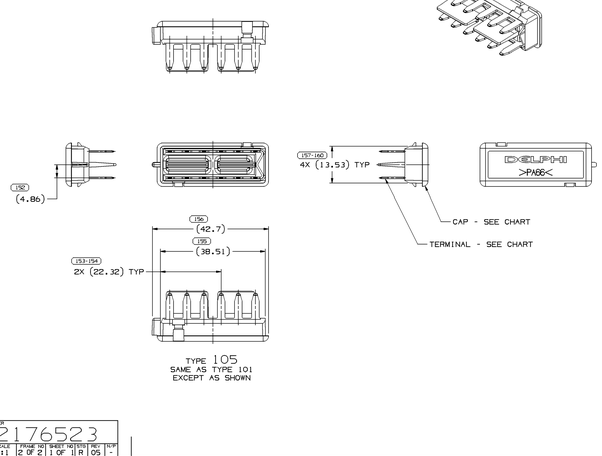

TYPE 105
SAME AS TYPE 101
EXCEPT AS SHOWN

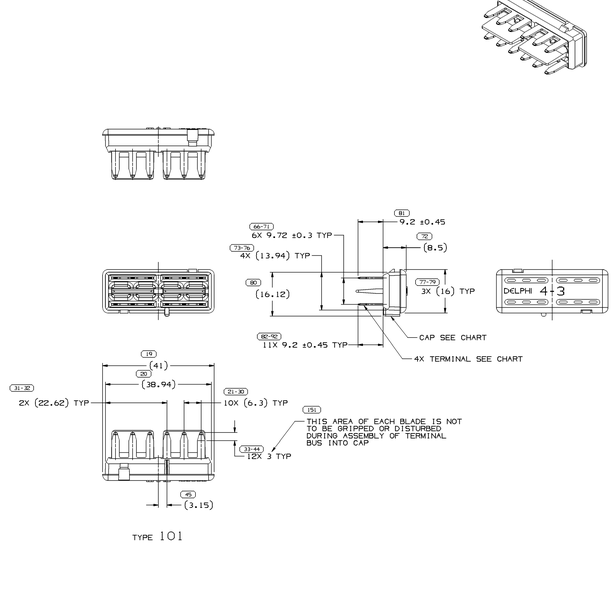

TYPE 101

NOTES

1. UNLESS OTHERWISE SPECIFIED AND/OR INDICATED: DIMENSIONS ARE TO FACE OF VIEW SHOWN AND AUTOMATICALLY ROUNDED BY COMPUTER FOR INSPECTION. (SEE MATH MODEL FOR PRECISE DIMENSIONS.) FOR ALL OTHER DIMENSIONS NOT SHOWN BUT REQUIRED FOR TOOL BUILD, SEE MATH MODEL FOR PRECISE TOOL PATH DATA.

PART NO	REV	N/P	STATUS	TYPE	MATERIAL SPECIFICATION AND COLOR	TERMINAL NO	CAP NO	MATING CONNECTOR
13536389	01	AA	INACTIVE	105	M3592024 PA66 HS IM-CRM	13536386	13536388	13536385
15305292	A5	-		104	M3592024 PA66 HS IM-CRM	12191205	15305293	15305291
15305289	A4	-		103	M3592015 PA66 HS IM-GRN LT	12176666	15305290	15305288
12191208	C2	-	OBSOLETE	104	R0071714 PA66 HS IM-CRM	12191205	12191206	12191207
12176665	D2	-	OBSOLETE	103	R0071787 PA66 HS IM-GRN LT	12176666	12176664	12176663
12176479	C3	-		102	M3592001 PA66 HS IM-BLK	12176480	12176477	12176474
12176478	C4	-		101	M3592010 PA66 HS IM-BRN	12176481	12176476	12176473

SYMBOL DEFINITION		MISSING NUMBERS
A DIMENSION WITHOUT AN INSPECTION REPORT SYMBOL ( ) DOES NOT REQUIRE INSPECTION. IT MAY BE CONTROLLED ON AN INDIVIDUAL COMPONENT DRAWING.	TOTAL NO. OF SYMBOLS ON DRAWING: 43	
	LAST NO. USED: 160	

CHG STATUS DATE	STS	REV	N/P	CHG	ZONE	REVISION HISTORY	AUTH	DR	APVD 1	APVD 2
02MR99	R	001	-	-		CLEANED REVISION COLUMN; 12176478 - WRIT. SPEC WAS R0071754 - CHANGE LEVEL ADVANCED	192369	RDM	001	GD
09AU05	R	02	-	-		ALL ACTIVE PARTS - REVISED MATERIAL SPEC TO LATEST M-SPEC	270592	RH	RH	WTM
26AU05	R	03	-	-		12176478, 15305289 & 15305292 - UPDATED PDM ATTRIBUTES	271679	TAI	TAI	RL
01SE05	R	04	-	-		13536389 - RELEASED	270771	RH	RH	GR
03MR06	R	05	-	-		13536389 - INACTIVE	278026	ACG	JVW	DEP

DRAWING NUMBER 12176523
SIZE A1x3 | SCALE 2:1 | FRAME NO 2 OF 2 | SHEET NO 1 OF 1 | REV R | CHG NO 05 | N/P -

NOTES

1. UNLESS OTHERWISE SPECIFIED AND/OR INDICATED: DIMENSIONS ARE TO FACE OF VIEW SHOWN AND AUTOMATICALLY ROUNDED BY COMPUTER FOR INSPECTION. (SEE MATH MODEL FOR PRECISE DIMENSIONS.) FOR ALL OTHER DIMENSIONS NOT SHOWN BUT REQUIRED FOR TOOL BUILD, SEE MATH MODEL FOR PRECISE TOOL PATH DATA.

(81) PROCESS SENSITIVE DIMENSION

DIMENSIONS ENCLOSED IN ( ) INDICATE REFERENCE DIMENSIONS, NO GD TOLERANCE LIMITS ARE ESTABLISHED

DECIMAL PLACES	1	2	3	4	ANGLES	FRACTIONS	1/16	1/32	1/64	1/128
TOL	±.5	±.25	±.125	±.05	±0°	±1/16	±1/32	±1/64	±1/128	±1/256

TOLERANCE UNLESS OTHERWISE SPECIFIED
[10,15] [20,25] [30,35] [40,45] [50,55] [60,65] [70,75] [80,85] [90,95] [100,105]
MODE OF TOLERANCE: ISO

THIRD ANGLE PROJECTION

DO NOT SCALE

USE MATH DATA

DELPHI
DELPHI PACKARD ELECTRIC SYSTEMS
WARREN, OH

		DATE
DR		
APVD1	DAVE STEELE	05MY95
APVD2	DAVE STEELE	05MY95
APVD3	G. DETTER	10MY95
APVD4		
APVD5		

SUBSTANCES OF CONCERN: NO RECYCLED CONTENT PER DELPHI (DP4900)

DRAWING NAME: TAXI ASM COV CONN M/P

DRAWING NUMBER 12176523
SIZE A1x3 | SCALE 2:1 | FRAME NO 1 OF 2 | SHEET NO 1 OF 1 | REV R | CHG NO 05 -

12176523