Innovative Service Around the Globe YAGEO

DATA SHEET

SURFACE MOUNT MULTILAYER CERAMIC CAPACITORS

Automotive grade

NP0/X7R

6.3 V TO 630 V

0.2 pF to 680nF

RoHS compliant & Halogen Free

YAGEO

Product Specification – July 5, 2021 V.13

SCOPE

This specification describes Automotive grade NP0/X7R series chip capacitors with lead-free terminations and used for automotive equipments.

APPLICATIONS

All general purpose applications
Entertainment applications
Comfort / security applications
Information applications

FEATURES

- AEC-Q200 qualified
- MSL class: MSL 1
- AC series soldering is compliant with J-STD-020D
- High component and equipment reliability
- The capacitors are 100% performed by automatic optical inspection prior to taping.

ORDERING INFORMATION - GLOBAL PART NUMBER

All part numbers are identified by the series, size, tolerance, TC material, packing style, voltage, process code, termination and capacitance value.

GLOBAL PART NUMBER

AC	xxxx	x	x	xxx	x	B	x	xxx
	(1)	(2)	(3)	(4)	(5)		(6)	(7)

(1) SIZE – INCH BASED (METRIC)

0201 (0603) / 0402 (1005) / 0603 (1608) / 0805 (2012) / 1206 (3216)/ 1210 (3225) / 1812 (4532)

(2) TOLERANCE

B = ±0.1 pF
C = ±0.25 pF
D = ±0.5 pF
F = ±1%
G = ±2%
J = ±5%
K = ±10%
M = ±20%

(3) PACKING STYLE (SEE FIG. 9 FOR DETAIL)

R = Paper/PE taping reel; Reel 7 inch
K = Blister taping reel; Reel 7 inch
P = Paper/PE taping reel; Reel 13 inch
F = Blister taping reel; Reel 13 inch

(4) TC MATERIAL

NPO
X7R

(5) RATED VOLTAGE

5 = 6.3 V
6 = 10 V
7 = 16 V
8 = 25 V
9 = 50 V
0 = 100 V
A = 200 V
Y = 250 V
B = 500 V
Z = 630 V

(6) PROCESS

N = NP0
B = Class 2 MLCC

(7) CAPACITANCE VALUE

2 significant digits+number of zeros
The 3rd digit signifies the multiplying factor, and letter R is decimal point
Example: 121 = 12 x 10^1 = 120 pF

CONSTRUCTION

The capacitor consists of a rectangular block of ceramic dielectric in which a number of interleaved metal electrodes are contained. This structure gives rise to a high capacitance per unit volume.

The inner electrodes are connected to the two end terminations and finally covered with a layer of plated tin (Matte Sn). The terminations are lead-free. A cross section of the structure is shown in Fig.1.

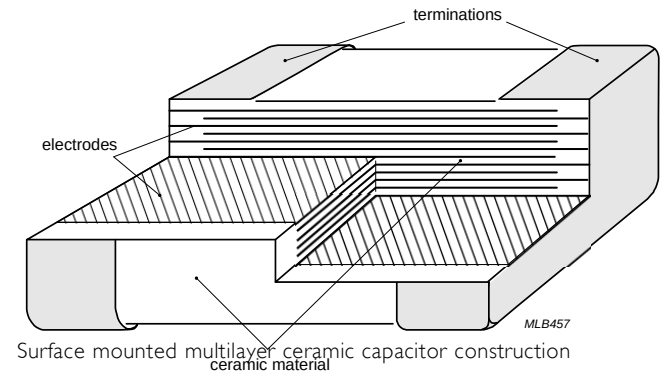

Fig. 1 Surface mounted multilayer ceramic capacitor construction

DIMENSION

Table 1 For outlines see fig. 2

TYPE	L_1 (mm)	W (mm)	T (MM)	L_2 / L_3 (mm)		L_4 (mm)
				min.	max.	min.
0201	0.6 ±0.03	0.3±0.03	0.3±0.03	0.10	0.20	0.20
0402	1.0 ±0.05	0.5 ±0.05	0.5 ±0.05	0.15	0.35	0.40
0603	1.6 ±0.10	0.8 ±0.10	0.8 ±0.10	0.20	0.60	0.40
0805	2.0 ±0.10	1.25 ±0.10	0.6 ±0.10	0.25	0.75	0.70
			0.85 ±0.10			
	2.0 ±0.20	1.25 ±0.20	1.25 ±0.20			
1206	3.2 ±0.15	1.6 ±0.15	0.6 ±0.10	0.25	0.75	1.40
			0.85 ±0.10			
	3.2 ±0.30	1.6 ±0.20	1.25 ±0.20			
			1.6 ±0.20			
	3.2 ±0.30	1.6 ±0.30	1.6 ±0.30			
1210	3.2 ±0.20	2.5 ±0.20	0.85 ±0.10	0.25	0.75	1.40
			1.25 ±0.20			
	3.2 ±0.30	2.5 ±0.20	1.6 ±0.20			
			2.0 ±0.20			
	3.2 ±0.40	2.5 ±0.30	2.5 ±0.20			
1808	4.5 ±0.40	2.0 ±0.30	1.25 ±0.20	0.25	0.75	2.20
1812	4.5 ±0.40	3.2 ±0.30	0.85 ±0.10	0.25	0.75	2.20
			1.25 ±0.20			
			1.60 ±0.20			
2020	5.7 ±0.40	5.0 ±0.30	2.0 ±0.20	0.25	0.75	3.40

OUTLINES

For dimension see Table 1

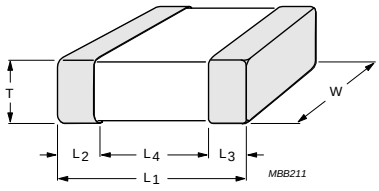

Fig. 2 Surface mounted multilayer ceramic capacitor dimension

CAPACITANCE RANGE & THICKNESS FOR NP0

Table 2 Sizes from 0201 to 0805

CAP.	0201	0402	0603			0805		
	25 V / 50 V	50 V	50 V	100 V	250 V	50 V	100 V	250V
0.2 pF	0.3±0.03							
0.47 pF	0.3±0.03	0.5±0.05	0.8±0.1	0.8±0.1	0.8±0.1	0.6±0.1	0.6±0.1	0.6±0.1
0.56 pF	0.3±0.03	0.5±0.05	0.8±0.1	0.8±0.1	0.8±0.1	0.6±0.1	0.6±0.1	0.6±0.1
0.68 pF	0.3±0.03	0.5±0.05	0.8±0.1	0.8±0.1	0.8±0.1	0.6±0.1	0.6±0.1	0.6±0.1
0.82 pF	0.3±0.03	0.5±0.05	0.8±0.1	0.8±0.1	0.8±0.1	0.6±0.1	0.6±0.1	0.6±0.1
1.0 pF	0.3±0.03	0.5±0.05	0.8±0.1	0.8±0.1	0.8±0.1	0.6±0.1	0.6±0.1	0.6±0.1
1.2 pF	0.3±0.03	0.5±0.05	0.8±0.1	0.8±0.1	0.8±0.1	0.6±0.1	0.6±0.1	0.6±0.1
1.5 pF	0.3±0.03	0.5±0.05	0.8±0.1	0.8±0.1	0.8±0.1	0.6±0.1	0.6±0.1	0.6±0.1
1.8 pF	0.3±0.03	0.5±0.05	0.8±0.1	0.8±0.1	0.8±0.1	0.6±0.1	0.6±0.1	0.6±0.1
2.2 pF	0.3±0.03	0.5±0.05	0.8±0.1	0.8±0.1	0.8±0.1	0.6±0.1	0.6±0.1	0.6±0.1
2.7 pF	0.3±0.03	0.5±0.05	0.8±0.1	0.8±0.1	0.8±0.1	0.6±0.1	0.6±0.1	0.6±0.1
3.3 pF	0.3±0.03	0.5±0.05	0.8±0.1	0.8±0.1	0.8±0.1	0.6±0.1	0.6±0.1	0.6±0.1
3.9 pF	0.3±0.03	0.5±0.05	0.8±0.1	0.8±0.1	0.8±0.1	0.6±0.1	0.6±0.1	0.6±0.1
4.7 pF	0.3±0.03	0.5±0.05	0.8±0.1	0.8±0.1	0.8±0.1	0.6±0.1	0.6±0.1	0.6±0.1
5.6 pF	0.3±0.03	0.5±0.05	0.8±0.1	0.8±0.1	0.8±0.1	0.6±0.1	0.6±0.1	0.6±0.1
6.8 pF	0.3±0.03	0.5±0.05	0.8±0.1	0.8±0.1	0.8±0.1	0.6±0.1	0.6±0.1	0.6±0.1
8.2 pF	0.3±0.03	0.5±0.05	0.8±0.1	0.8±0.1	0.8±0.1	0.6±0.1	0.6±0.1	0.6±0.1
10 pF	0.3±0.03	0.5±0.05	0.8±0.1	0.8±0.1	0.8±0.1	0.6±0.1	0.6±0.1	0.6±0.1
12 pF	0.3±0.03	0.5±0.05	0.8±0.1	0.8±0.1	0.8±0.1	0.6±0.1	0.6±0.1	0.6±0.1
15 pF	0.3±0.03	0.5±0.05	0.8±0.1	0.8±0.1	0.8±0.1	0.6±0.1	0.6±0.1	0.6±0.1
18 pF	0.3±0.03	0.5±0.05	0.8±0.1	0.8±0.1	0.8±0.1	0.6±0.1	0.6±0.1	0.6±0.1
22 pF	0.3±0.03	0.5±0.05	0.8±0.1	0.8±0.1	0.8±0.1	0.6±0.1	0.6±0.1	0.6±0.1
27 pF	0.3±0.03	0.5±0.05	0.8±0.1	0.8±0.1	0.8±0.1	0.6±0.1	0.6±0.1	0.6±0.1
33 pF	0.3±0.03	0.5±0.05	0.8±0.1	0.8±0.1	0.8±0.1	0.6±0.1	0.6±0.1	0.6±0.1
39 pF		0.5±0.05	0.8±0.1	0.8±0.1	0.8±0.1	0.6±0.1	0.6±0.1	0.6±0.1
47 pF		0.5±0.05	0.8±0.1	0.8±0.1	0.8±0.1	0.6±0.1	0.6±0.1	0.6±0.1
56 pF		0.5±0.05	0.8±0.1	0.8±0.1	0.8±0.1	0.6±0.1	0.6±0.1	0.6±0.1
68 pF		0.5±0.05	0.8±0.1	0.8±0.1	0.8±0.1	0.6±0.1	0.6±0.1	0.6±0.1
82 pF		0.5±0.05	0.8±0.1	0.8±0.1	0.8±0.1	0.6±0.1	0.6±0.1	0.6±0.1
100 pF		0.5±0.05	0.8±0.1	0.8±0.1	0.8±0.1	0.6±0.1	0.6±0.1	0.6±0.1

NOTE

1. Values in shaded cells indicate thickness class in mm
2. Capacitance value of non E-12 series is on request

CAPACITANCE RANGE & THICKNESS FOR NP0

Table 3 Sizes from 0402 to 0805 (continued)

CAP.	0402	0603			0805		
	50 V	50 V	100 V	250 V	50 V	100 V	250 V
120 pF	0.5±0.05	0.8±0.1	0.8±0.1	0.8±0.1	0.6±0.1	0.6±0.1	0.6±0.1
150 pF	0.5±0.05	0.8±0.1	0.8±0.1	0.8±0.1	0.6±0.1	0.6±0.1	0.6±0.1
180 pF	0.5±0.05	0.8±0.1	0.8±0.1	0.8±0.1	0.6±0.1	0.6±0.1	0.6±0.1
220 pF	0.5±0.05	0.8±0.1	0.8±0.1	0.8±0.1	0.6±0.1	0.6±0.1	0.85±0.1
270 pF	0.5±0.05	0.8±0.1	0.8±0.1	0.8±0.1	0.6±0.1	0.6±0.1	0.85±0.1
330 pF	0.5±0.05	0.8±0.1	0.8±0.1	0.8±0.1	0.6±0.1	0.6±0.1	0.85±0.1
390 pF	0.5±0.05	0.8±0.1	0.8±0.1	0.8±0.1	0.6±0.1	0.6±0.1	0.85±0.1
470 pF	0.5±0.05	0.8±0.1	0.8±0.1	0.8±0.1	0.6±0.1	0.6±0.1	0.85±0.1
560 pF	0.5±0.05	0.8±0.1	0.8±0.1	0.8±0.1	0.6±0.1	0.85±0.1	0.85±0.1
680 pF	0.5±0.05	0.8±0.1	0.8±0.1	0.8±0.1	0.6±0.1	0.85±0.1	0.85±0.1
820 pF	0.5±0.05	0.8±0.1	0.8±0.1		0.6±0.1	0.85±0.1	0.85±0.1
1.0 nF	0.5±0.05	0.8±0.1	0.8±0.1		0.6±0.1	0.85±0.1	0.85±0.1
1.2 nF		0.8±0.1	0.8±0.1		0.85±0.1	0.85±0.1	
1.5 nF		0.8±0.1	0.8±0.1		0.85±0.1	0.85±0.1	
1.8 nF		0.8±0.1	0.8±0.1		0.85±0.1	0.85±0.1	
2.2 nF		0.8±0.1	0.8±0.1		1.25±0.2	1.25±0.2	
2.7 nF					1.25±0.2	1.25±0.2	
3.3 nF					1.25±0.2	1.25±0.2	
3.9 nF					1.25±0.2	1.25±0.2	
4.7 nF					1.25±0.2	1.25±0.2	
5.6 nF					1.25±0.2	1.25±0.2	
6.8 nF					1.25±0.2	1.25±0.2	
8.2 nF					1.25±0.2	1.25±0.2	
10 nF					1.25±0.2	1.25±0.2	

NOTE

1. Values in shaded cells indicate thickness class in mm
2. Capacitance value of non E-12 series is on request

CAPACITANCE RANGE & THICKNESS FOR NP0

Table 4 Sizes from 1206 to 1210

CAP.	1206					1210			
	50 V	100 V	250 V	500 V	630 V	50 V	100 V	250 V	500 V
10 pF	0.6±0.1	0.6±0.1	0.6±0.1	0.6±0.1	1.25±0.2				
12 pF	0.6±0.1	0.6±0.1	0.6±0.1	0.6±0.1	1.25±0.2				
15 pF	0.6±0.1	0.6±0.1	0.6±0.1	0.6±0.1	1.25±0.2				
18 pF	0.6±0.1	0.6±0.1	0.6±0.1	0.6±0.1	1.25±0.2				
22 pF	0.6±0.1	0.6±0.1	0.6±0.1	0.6±0.1	1.25±0.2				
27 pF	0.6±0.1	0.6±0.1	0.6±0.1	0.6±0.1	1.25±0.2				
33 pF	0.6±0.1	0.6±0.1	0.6±0.1	0.6±0.1	1.25±0.2				
39 pF	0.6±0.1	0.6±0.1	0.6±0.1	0.6±0.1	1.25±0.2				
47 pF	0.6±0.1	0.6±0.1	0.6±0.1	0.6±0.1	1.25±0.2				
56 pF	0.6±0.1	0.6±0.1	0.6±0.1	0.6±0.1	1.25±0.2				
68 pF	0.6±0.1	0.6±0.1	0.6±0.1	0.6±0.1	1.25±0.2				
82 pF	0.6±0.1	0.6±0.1	0.6±0.1	0.6±0.1	1.25±0.2				
100 pF	0.6±0.1	0.6±0.1	0.6±0.1	0.6±0.1	1.25±0.2				
120 pF	0.6±0.1	0.6±0.1	0.6±0.1	0.6±0.1	1.25±0.2				
150 pF	0.6±0.1	0.6±0.1	0.6±0.1	0.6±0.1	1.25±0.2				
180 pF	0.6±0.1	0.6±0.1	0.6±0.1	0.6±0.1	1.25±0.2				
220 pF	0.6±0.1	0.6±0.1	0.6±0.1	0.6±0.1	1.25±0.2				
270 pF	0.6±0.1	0.6±0.1	0.6±0.1	0.6±0.1	1.25±0.2				
330 pF	0.6±0.1	0.6±0.1	0.6±0.1	0.6±0.1	1.25±0.2				
390 pF	0.6±0.1	0.6±0.1	0.6±0.1	0.6±0.1	1.25±0.2				
470 pF	0.6±0.1	0.6±0.1	0.6±0.1	0.6±0.1	1.25±0.2				
560 pF	0.6±0.1	0.6±0.1	0.6±0.1	0.6±0.1	1.25±0.2				
680 pF	0.6±0.1	0.6±0.1	0.6±0.1	0.6±0.1	1.25±0.2				
820 pF	0.6±0.1	0.6±0.1	0.85±0.1	0.85±0.1	1.25±0.2				
1.0 nF	0.6±0.1	0.6±0.1	0.85±0.1	0.85±0.1	1.25±0.2	1.25±0.2	1.25±0.2	1.25±0.2	1.25±0.2
1.2 nF	0.6±0.1	0.6±0.1	0.85±0.1			1.25±0.2	1.25±0.2	1.25±0.2	1.25±0.2
1.5 nF	0.6±0.1	0.6±0.1	0.85±0.1			1.25±0.2	1.25±0.2	1.25±0.2	1.25±0.2
1.8 nF	0.6±0.1	0.6±0.1				1.25±0.2	1.25±0.2	1.25±0.2	1.25±0.2
2.2 nF	0.6±0.1	0.6±0.1				1.25±0.2	1.25±0.2	1.25±0.2	
2.7 nF	0.6±0.1	0.6±0.1				1.25±0.2	1.25±0.2	1.25±0.2	

NOTE

1. Values in shaded cells indicate thickness class in mm
2. Capacitance value of non E-12 series is on request

CAPACITANCE RANGE & THICKNESS FOR X7R

Table 5 Sizes from 0201 to 0603

CAP.	0201		0402					0603				
	25V	50 V	10V	16 V	25 V	50 V	100 V	10V	16 V	25 V	50 V	100 V
100 pF	0.3±0.03	0.3±0.03										
150 pF	0.3±0.03	0.3±0.03										
220 pF	0.3±0.03	0.3±0.03	0.5±0.05	0.5±0.05	0.5±0.05	0.5±0.05	0.5±0.05					
330 pF	0.3±0.03	0.3±0.03	0.5±0.05	0.5±0.05	0.5±0.05	0.5±0.05	0.5±0.05					
470 pF	0.3±0.03	0.3±0.03	0.5±0.05	0.5±0.05	0.5±0.05	0.5±0.05	0.5±0.05					
680 pF	0.3±0.03	0.3±0.03	0.5±0.05	0.5±0.05	0.5±0.05	0.5±0.05	0.5±0.05					
1.0 nF	0.3±0.03	0.3±0.03	0.5±0.05	0.5±0.05	0.5±0.05	0.5±0.05	0.5±0.05	0.8±0.1	0.8±0.1	0.8±0.1	0.8±0.1	0.8±0.1
1.5 nF	0.3±0.03		0.5±0.05	0.5±0.05	0.5±0.05	0.5±0.05	0.5±0.05	0.8±0.1	0.8±0.1	0.8±0.1	0.8±0.1	0.8±0.1
2.2 nF	0.3±0.03		0.5±0.05	0.5±0.05	0.5±0.05	0.5±0.05		0.8±0.1	0.8±0.1	0.8±0.1	0.8±0.1	0.8±0.1
3.3 nF	0.3±0.03		0.5±0.05	0.5±0.05	0.5±0.05	0.5±0.05		0.8±0.1	0.8±0.1	0.8±0.1	0.8±0.1	0.8±0.1
4.7 nF	0.3±0.03		0.5±0.05	0.5±0.05	0.5±0.05	0.5±0.05		0.8±0.1	0.8±0.1	0.8±0.1	0.8±0.1	0.8±0.1
6.8 nF	0.3±0.03		0.5±0.05	0.5±0.05	0.5±0.05	0.5±0.05		0.8±0.1	0.8±0.1	0.8±0.1	0.8±0.1	0.8±0.1
10 nF	0.3±0.03		0.5±0.05	0.5±0.05	0.5±0.05	0.5±0.05		0.8±0.1	0.8±0.1	0.8±0.1	0.8±0.1	0.8±0.1
15 nF			0.5±0.05	0.5±0.05	0.5±0.05	0.5±0.05		0.8±0.1	0.8±0.1	0.8±0.1	0.8±0.1	0.8±0.1
22 nF			0.5±0.05	0.5±0.05	0.5±0.05	0.5±0.05		0.8±0.1	0.8±0.1	0.8±0.1	0.8±0.1	0.8±0.1
33 nF			0.5±0.05	0.5±0.05	0.5±0.05	0.5±0.05		0.8±0.1	0.8±0.1	0.8±0.1	0.8±0.1	0.8±0.1
47 nF			0.5±0.05	0.5±0.05	0.5±0.05	0.5±0.05		0.8±0.1	0.8±0.1	0.8±0.1	0.8±0.1	0.8±0.1
68 nF			0.5±0.05	0.5±0.05	0.5±0.05	0.5±0.05		0.8±0.1	0.8±0.1	0.8±0.1	0.8±0.1	0.8±0.1
100 nF			0.5±0.05	0.5±0.05	0.5±0.05	0.5±0.05		0.8±0.1	0.8±0.1	0.8±0.1	0.8±0.1	0.8±0.1
150 nF								0.8±0.1	0.8±0.1	0.8±0.1	0.8±0.1	
220 nF								0.8±0.1	0.8±0.1	0.8±0.1	0.8±0.1	
330 nF								0.8±0.1	0.8±0.1	0.8±0.1		
470 nF								0.8±0.1	0.8±0.1	0.8±0.1		
680 nF								0.8±0.1	0.8±0.1	0.8±0.1		

NOTE

1. Values in shaded cells indicate thickness class in mm
2. Capacitance value of non E-6 series is on request

CAPACITANCE RANGE & THICKNESS FOR X7R

Table 6 Size 0805

CAP.	0805						
	10 V	16 V	25 V	50 V	100 V	250 V	500 V
1.0 nF	0.85±0.1	0.85±0.1	0.85±0.1	0.85±0.1	0.85±0.1	0.85±0.1	0.85±0.1
1.5 nF	0.85±0.1	0.85±0.1	0.85±0.1	0.85±0.1	0.85±0.1	0.85±0.1	0.85±0.1
2.2 nF	0.85±0.1	0.85±0.1	0.85±0.1	0.85±0.1	0.85±0.1	0.85±0.1	0.85±0.1
3.3 nF	0.85±0.1	0.85±0.1	0.85±0.1	0.85±0.1	0.85±0.1	0.85±0.1	0.85±0.1
4.7 nF	0.85±0.1	0.85±0.1	0.85±0.1	0.85±0.1	0.85±0.1	0.85±0.1	0.85±0.1
6.8 nF	0.85±0.1	0.85±0.1	0.85±0.1	0.85±0.1	0.85±0.1	1.25±0.2	
10 nF	0.85±0.1	0.85±0.1	0.85±0.1	0.85±0.1	0.85±0.1	1.25±0.2	
15 nF	0.85±0.1	0.85±0.1	0.85±0.1	0.85±0.1	0.85±0.1	1.25±0.2	
22 nF	0.85±0.1	0.85±0.1	0.85±0.1	0.85±0.1	0.85±0.1	1.25±0.2	
33 nF	0.85±0.1	0.85±0.1	0.85±0.1	0.85±0.1	1.25±0.2		
47 nF	0.85±0.1	0.85±0.1	0.85±0.1	0.85±0.1	1.25±0.2		
68 nF	0.85±0.1	0.85±0.1	0.85±0.1	0.85±0.1 1.25±0.2	1.25±0.2		
100 nF	0.85±0.1	0.85±0.1	0.85±0.1	0.85±0.1 1.25±0.2	1.25±0.2		
150 nF	0.85±0.1	0.85±0.1	0.85±0.1	1.25±0.2			
220 nF	0.85±0.1	0.85±0.1	0.85±0.1	1.25±0.2			
330 nF	1.25±0.2	1.25±0.2	1.25±0.2	1.25±0.2			
470 nF	1.25±0.2	1.25±0.2	1.25±0.2	1.25±0.2			
680 nF	1.25±0.2	1.25±0.2	1.25±0.2	1.25±0.2			

NOTE

1. Values in shaded cells indicate thickness class in mm
2. Capacitance value of non E-6 series is on request

CAPACITANCE RANGE & THICKNESS FOR X7R

Table 7 Size 1206

CAP.	1206								
	6.3 V	10V	16V	25V	50 V	100 V	250 V	500 V	630 V
1 nF	-	-	-	-	-	-	-	1.25±0.2	1.25±0.2
2.2 nF	-	-	-	-	-	-	-	1.25±0.2	1.25±0.2
4.7 nF	-	-	-	-	-	-	-	1.25±0.2	1.25±0.2
10 nF	-	-	-	-	-	-	-	1.25±0.2	1.25±0.2
22 nF	0.85±0.1	0.85±0.1	0.85±0.1	0.85±0.1	0.85±0.1	0.85±0.1	1.25±0.2	-	-
33 nF	0.85±0.1	0.85±0.1	0.85±0.1	0.85±0.1	0.85±0.1	0.85±0.1	1.60±0.2	-	-
47 nF	0.85±0.1	0.85±0.1	0.85±0.1	0.85±0.1	0.85±0.1	0.85±0.1	1.60±0.2	-	-
68 nF	0.85±0.1	0.85±0.1	0.85±0.1	0.85±0.1	0.85±0.1	1.25±0.2	1.60±0.2	-	-
100 nF	0.85±0.1	0.85±0.1	0.85±0.1	0.85±0.1	0.85±0.1	1.25±0.2	1.60±0.2	-	-
150 nF	0.85±0.1	0.85±0.1	0.85±0.1	0.85±0.1	1.25±0.2	1.25±0.2	-	-	-
220 nF	0.85±0.1	0.85±0.1	0.85±0.1	0.85±0.1	1.25±0.2	1.25±0.2	-	-	-
330 nF	0.85±0.1	0.85±0.1	0.85±0.1	0.85±0.1	1.60±0.2	1.60±0.2			
470 nF	1.00±0.1	1.00±0.1	1.00±0.1	1.00±0.1	1.60±0.2	1.60±0.2			
680 nF	1.15±0.1	1.15±0.1	1.15±0.1	1.60±0.2	1.60±0.2	1.60±0.2			

Table 8 Size 1210

CAP.	1210							1812	
	6.3V	10 V	16 V	25 V	50V	100 V	250 V	50V	100V
100 nF	0.85±0.1	0.85±0.1	0.85±0.1	0.85±0.1	0.85±0.1	0.85±0.1	1.25±0.2		
150 nF	0.85±0.1	0.85±0.1	0.85±0.1	0.85±0.1	1.25±0.2	1.25±0.2			
220 nF	0.85±0.1	0.85±0.1	0.85±0.1	0.85±0.1	1.25±0.2	1.25±0.2			
330 nF	0.85±0.1	0.85±0.1	0.85±0.1	0.85±0.1	1.25±0.2	2.0±0.2			
470 nF	1.25±0.2	1.25±0.2	1.25±0.2	1.25±0.2	1.25±0.2	2.0±0.2		1.60±0.2	1.60±0.2
680 nF	1.25±0.2	1.25±0.2	1.25±0.2	1.25±0.2	1.25±0.2	2.0±0.2		1.60±0.2	1.60±0.2

NOTE

1. Values in shaded cells indicate thickness class in mm
2. Capacitance value of non E-6 series is on request

THICKNESS CLASSES AND PACKING QUANTITY

Table 9

SIZE CODE	THICKNESS CLASSIFICATION	PACKING CODE		TAPE WIDTH	QUANTITY PER REEL			
					Ø180 MM / 7 INCH		Ø330 MM / 13 INCH	
		7 INCH	13 INCH		Paper	Blister	Paper	Blister
0201	0.3 ±0.03 mm	R	P	8 mm	15,000	---	50,000	---
0402	0.5 ±0.05 mm	R	P	8 mm	10,000	---	50,000	---
0603	0.8 ±0.1 mm	R	P	8 mm	4,000	---	15,000	---
0805	0.6 ±0.1 mm	R	P	8 mm	4,000	---	20,000	---
	0.85 ±0.1 mm	R	P	8 mm	4,000	---	15,000	---
	1.25 ±0.2 mm	K	F	8 mm	---	3,000	---	10,000
1206	0.6 ±0.1 mm	R	P	8 mm	4,000	---	20,000	---
	0.85 ±0.1 mm	R	P	8 mm	4,000	---	15,000	---
	1.0/1.15 ±0.1 mm	K	F	8 mm	---	3,000	---	10,000
	1.25 ±0.2 mm	K	F	8 mm	---	3,000	---	10,000
1210	0.85 ±0.1 mm	K	F	8 mm	---	4,000	---	10,000
	1.15 ±0.1 mm	K	F	8 mm	---	3,000	---	10,000
	1.25 ±0.2 mm	K	F	8 mm	---	3,000	---	10,000
	2.0 ±0.2 mm	K		8 mm	---	2,000	---	---
	2.5 ±0.2 mm	K		8 mm	---	1,000	---	---
1812	0.6 / 0.85±0.1 mm	K		12 mm	---	2,000	---	---
	1.15±0.1 mm	K		12 mm	---	1,000	---	---
	1.25±0.2 mm	K		12 mm	---	1,000	---	---
	1.6 ±0.2 mm	K		12 mm	---	2,000	---	---

PAPER/PE TAPE SPECIFICATION

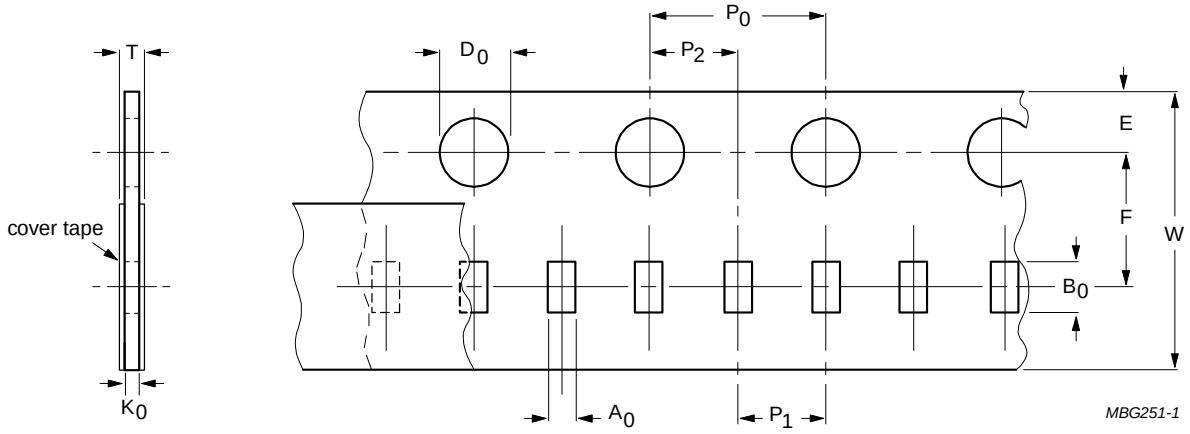

Fig. 3 Paper/PE tape

Table 10 Dimensions of paper/PE tape for relevant chip size; see Fig.3

Unit: mm

SIZE CODE	SYMBOL A_0	B_0	W	E	F	P_0 (1)	P_1	P_2	ØD_0	K_0	T
0201	0.39 ± 0.06	0.70 ± 0.06	8.0 ± 0.20	1.75 ± 0.1	3.50 ± 0.05	4.0 ± 0.05	2.0 ± 0.05	2.0 ± 0.05	1.55 ± 0.03	0.38 ± 0.05	(0.47 / 0.55)±0.10
0402	0.70 ± 0.15	1.21 ± 0.12	8.0 ± 0.20	1.75 ± 0.1	3.50 ± 0.05	4.0 ± 0.05	2.0 ± 0.05	2.0 ± 0.05	1.50 +0.1 /-0	(0.75 / 0.60)±0.10	(0.85 / 0.70)±0.10
0603	1.05 ± 0.14	1.86 ± 0.13	8.0 ± 0.20	1.75 ± 0.1	3.50 ± 0.05	4.0 ± 0.10	4.0 ± 0.10	2.0 ± 0.05	1.50 +0.1 /-0	(1.05 / 0.95 / 0.75)±0.10	(1.15 / 1.05 / 0.85)±0.10
0805	1.50 ± 0.15	2.26 ± 0.20	8.0 ± 0.20	1.75 ± 0.1	3.50 ± 0.05	4.0 ± 0.10	4.0 ± 0.10	2.0 ± 0.05	1.50 +0.1 /-0	(1.05 / 0.95 / 0.75)±0.10	(1.15 / 1.05 / 0.85)±0.10
1206	1.90 ± 0.15	3.50 ± 0.20	8.0 ± 0.20	1.75 ± 0.1	3.50 ± 0.05	4.0 ± 0.10	4.0 ± 0.10	2.0 ± 0.05	1.50 +0.1 /-0	(0.95 / 0.75)±0.10	(1.05 / 0.85)± 0.10

NOTE

1. P_0 pitch tolerance over any 10 pitches is ±0.2 mm

BLISTER TAPE SPECIFICATION

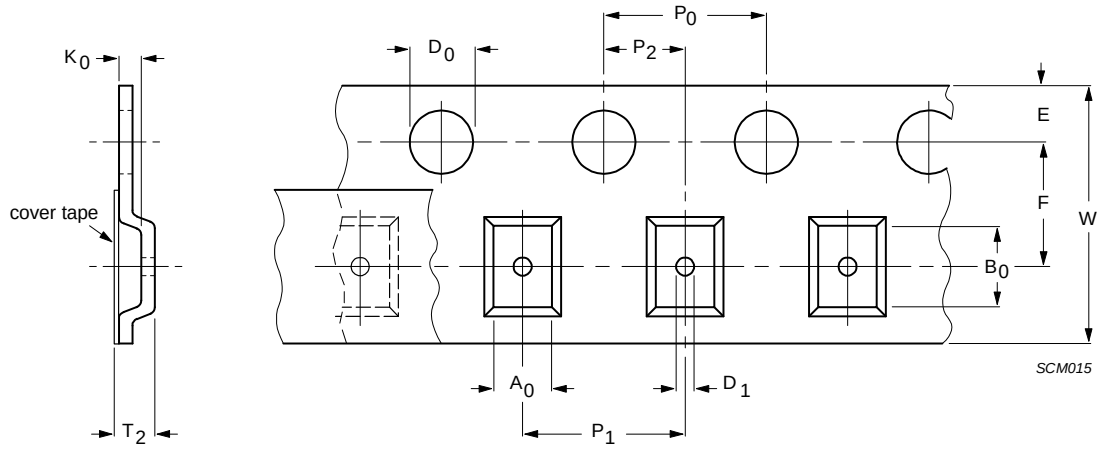

direction of unreeling

K_0: so chosen that the orientation of the component cannot change
For W = 8 mm: T2 = 3.5 mm max.
For W = 12 mm: T2 = 6.5 mm max.

Fig. 4 Blister tape

Table 11 Dimensions of blister tape for relevant chip size; see Fig.4

SIZE CODE	SYMBOL															Unit: mm
	A_0		B_0		K_0		W	E	F	$ØD_0$	$ØD_1$	P_0 (2)	P_1	P_2	T2	
	Min.	Max.	Min.	Max.	Min.	Max.					Min.				Min.	Max.
0805	1.29	1.65	2.09	2.60	1.25	1.62	8.1 ±0.20	1.75 ±0.1	3.5 ±0.05	1.5 +0.1/-0.0	1 +0.1/-0.0	4.0 ±0.10	4.0 ±0.10	2.0 ±0.05	1.30	1.67
1206	1.65	2.12	3.30	3.75	1.22	2.15	8.1 ±0.20	1.75 ±0.1	3.5 ±0.05	1.5 +0.1/-0.0	1 +0.1/-0.0	4.0 ±0.10	4.0 ±0.10	2.0 ±0.05	1.27	2.20
1210	2.55	3.02	3.31	3.88	0.97	2.92	8.1 ±0.20	1.75 ±0.1	3.5 ±0.05	1.5 +0.1/-0.0	1 +0.1/-0.0	4.0 ±0.10	4.0 ±0.10	2.0 ±0.05	1.02	2.97
1808	2.05	2.55	4.80	5.45	1.30	2.45	12.1 ±0.20	1.75 ±0.1	5.5 ±0.05	1.5 +0.1/-0.0	1.5 +0.1/-0.0	4.0 ±0.10	4.0 ±0.10	2.0 ±0.05	1.35	2.50
1812	3.35	3.75	4.70	5.33	0.70	2.40	12.1 ±0.20	1.75 ±0.1	5.5 ±0.05	1.5 +0.1/-0.0	1.5 +0.1/-0.0	4.0 ±0.10	8.0 ±0.10	2.0 ±0.05	0.75	2.45

NOTE

1. Typical capacitor displacement in pocket
2. P_0 pitch tolerance over any 10 pitches is ±0.2 mm

REEL SPECIFICATION

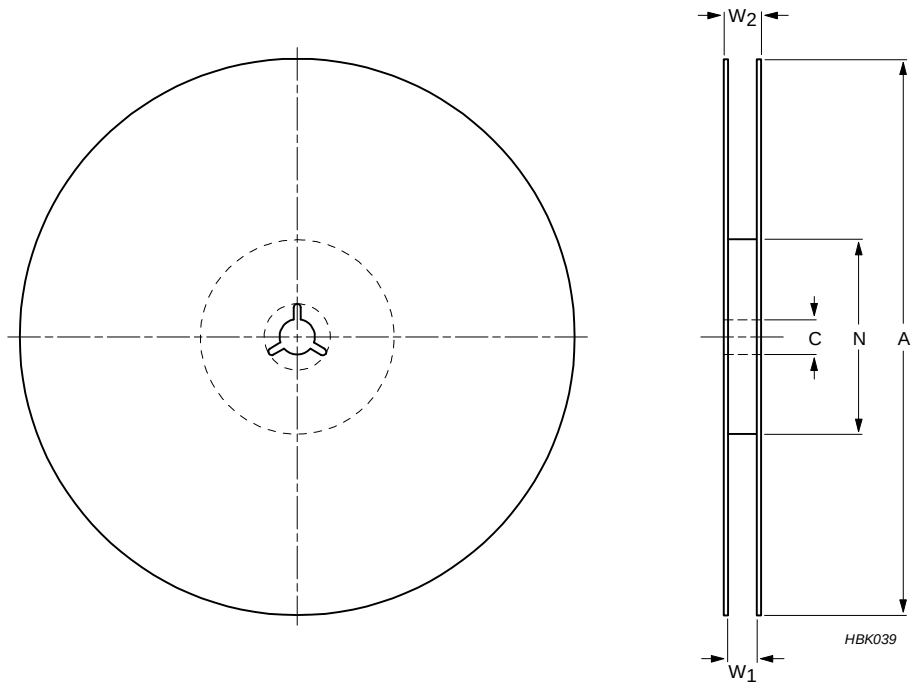

Fig. 5 Reel

Table12 Reel dimensions; see Fig.5

TAPE WIDTH	SYMBOL				Unit: mm
	A	N	C	W_1	$W_{2max.}$
8 (Ø178 mm/7")	178 ±1.0	60 ±1.0	13 +0.50/-0.20	9.4 ±1.5	14.4
8 (Ø330 mm/13")	330 ±1.0	100 ±1.0	13 +0.50/-0.20	9.0 ±0.2	14.4
12 (Ø178 mm/7")	178 ±1.0	60 ±1.0	13 +0.50/-0.20	13.4 ±1.5	18.4

PROPERTIES OF REEL

Material: polystyrene

Surface resistance: $<10^{10}$ Χ/sq.

ELECTRICAL CHARACTERISTICS

NP0/X7R DIELECTRIC CAPACITORS; NI/SIN TERMINATIONS

Unless otherwise specified, all test and measurements shall be made under standard atmospheric conditions for testing as given in 5.3 of IEC 60068-1:

- Temperature: 15 °C to 35 °C
- Relative humidity: 25% to 75%
- Air pressure: 86 kPa to 106 kPa

Before the measurements are made, the capacitor shall be stored at the measuring temperature for a time sufficient to allow the entire capacitor to reach this temperature.

The period as prescribed for recovery at the end of a test is normally sufficient for this purpose.

Table 13

DESCRIPTION		VALUE
Capacitance range		0.2 pF to 680 nF
Capacitance tolerance		
NP0	C < 10 pF	±0.1 pF, ±0.25 pF, ±0.5 pF
	C ≥ 10 pF	±1%, ±2%, ±5%
X7R		±5% (1), ±10%, ±20%
Dissipation factor (D.F.)		
NP0	C < 30 pF	≤ 1 / (400 + 20C)
	C ≥ 30 pF	≤ 0.1 %

X7R	0201	0402	0603	0805	1206	1210	1812	
≤10V		220pF to 100nF	1nF to 680nF	1nF to 680nF	22nF to 680nF	100nF to 680nF		≤ 5%
								≤ 10%
16V		220pF to 22nF	1nF to 220nF	1nF to 470nF	22nF to 680nF	100nF to 680nF		≤ 3.5%
		27nF to 100nF	470nF to 680nF	680nF	680nF			≤ 5%
25V	100pF to 470pF	220pF to 10nF	1nF to 39nF	1nF to 180nF	22nF to 680nF	100nF to 680nF		≤ 2.5%
		12nF to 27nF	47nF to 220nF	220nF to 470nF	680nF			≤ 3.5%
	560pF to 10nF	33nF to 100nF	330nF to 680nF	330nF to 680nF	680nF			≤ 5%
50V	100pF to 470nF	220pF to 10nF	1nF to 39nF	1nF to 180nF	22nF to 470nF	100nF to 680nF	470nF to 680nF	≤ 2.5%
	560pF to 1nF		47nF to 220nF	220nF to 470nF				≤ 3.5%
		12nF to 100nF		680nF	680nF			≤ 5%
								≤ 10%
100V		220pF to 1.5nF	1nF to 10nF	1nF to 100nF	22nF to 470nF	100nF to 270nF	470nF to 680nF	≤ 2.5%
			12nF to 100nF		560nF to 680nF	330nF to 680nF		≤ 5%
250V				1nF to 22nF	22nF to 100nF	100nF		≤ 2.5%
500V				1nF to 4.7nF	1nF to 10nF			≤ 2.5%
630V					1nF to 10nF			≤ 2.5%

Insulation resistance after 1 minute at U_r (DC)	I.R. ≥ 10 GΩ or I.R. × C ≥ 500 seconds whichever is less I.R. X C ≥ 100 seconds (2)
Operating temperature range: NP0/X7R	–55 °C to +125 °C

NOTE

1. Capacitance tolerance ±5% doesn't available for X7R full product range, please contact local sales force before order
2. 0603/ 25 V/ 330nF to 680nF

SOLDERING RECOMMENDATION

Table 14

SOLDERING METHOD	SIZE 0201	0402	0603	0805	1206	≥ 1210
Reflow	Reflow only	≥ 0.1 μF	≥ 1.0 μF	≥ 2.2 μF	≥ 4.7 μF	Reflow only
Reflow/Wave		< 0.1 μF	< 1.0 μF	< 2.2 μF	< 4.7 μF	---

SOLDERING CONDITIONS

The lead free MLCCs are able to stand the reflow soldering conditions as below:

- Temperature: above 220 °C
- Endurance: 95 to 120 seconds
- Cycles: 3 times

The test of "soldering heat resistance" is carried out in accordance with the schedule of "MIL-STD-202F-method 210F", "The robust construction of chip capacitors allows them to be completely immersed in a solder bath of 270 °C for 10 seconds". Therefore, it is possible to mount MLCCs on one side of a PCB and other discrete components on the reverse (mixed PCBs). Surface Mount Capacitors are tested for solderability at 245 °C during 2 seconds. The test condition for no leaching is 260°C for 30 seconds.

TESTS AND REQUIREMENTS

Table 15 Test procedures and requirements

TEST	TEST METHOD		PROCEDURE	REQUIREMENTS
Mounting	IEC 60384-21/22	4.3	The capacitors may be mounted on printed-circuit boards or ceramic substrates	No visible damage
Capacitance	IEC 60384-21/22	4.5.1	Class 1: At 20 °C, 24 hours after annealing f = 1 MHz for C ≤ 1nF, measuring at voltage 1 V_{rms} at 20 °C f = 1 KHz for C > 1nF, measuring at voltage 1 V_{rms} at 20 °C Class 2: At 20 °C, 24 hours after annealing f = 1 KHz, measuring at voltage 1 V_{rms} at 20 °C	Within specified tolerance
Dissipation Factor (D.F.)	IEC 60384-21/22	4.5.2	Class 1: At 20 °C, 24 hours after annealing f = 1 MHz for C ≤ 1nF, measuring at voltage 1 V_{rms} at 20 °C f = 1 KHz for C > 1nF, measuring at voltage 1 V_{rms} at 20 °C Class 2: At 20 °C, 24 hours after annealing f = 1 KHz, measuring at voltage 1 V_{rms} at 20 °C	In accordance with specification
Insulation Resistance	IEC 60384-21/22	4.5.3	At U_r (DC) for 1 minute	In accordance with specification

TEST	TEST METHOD		PROCEDURE	REQUIREMENTS
High Temperature Exposure	AEC-Q200	3	Unpowered ; 1000hours @ T=150 °C Measurement at 24±2 hours after test conclusion.	No visual damage D.F.: within initial specified value IR: within initial specified value
Temperature Cycling	AEC-Q200	4	Preconditioning: 150 +0/–10 °C for 1 hour, then keep for 24 ±1 hours at room temperature 1000 cycles with following detail: 30 minutes at lower category temperature 30 minutes at upper category temperature Recovery time 24 ±2 hours	No visual damage D.F. meet initial specified value IR meet initial specified value
Destructive Physical Analysis	AEC-Q200	5	Note: Only applies to SMD ceramics. Electrical test not required.	
Moisture Resistance	AEC-Q200	6	T=24 hrs/per cycle; 10 continuous cycles unpowered. ment at 24 ±2 hours after Measuretest condition.	No visual damage ΔC/C NP0: Within ±3% or 3 pF, whichever is greater X7R: ±15% D.F. Within initial specified value IR NP0: ≥ 10,000 MΩ X7R: Meet initial specified value

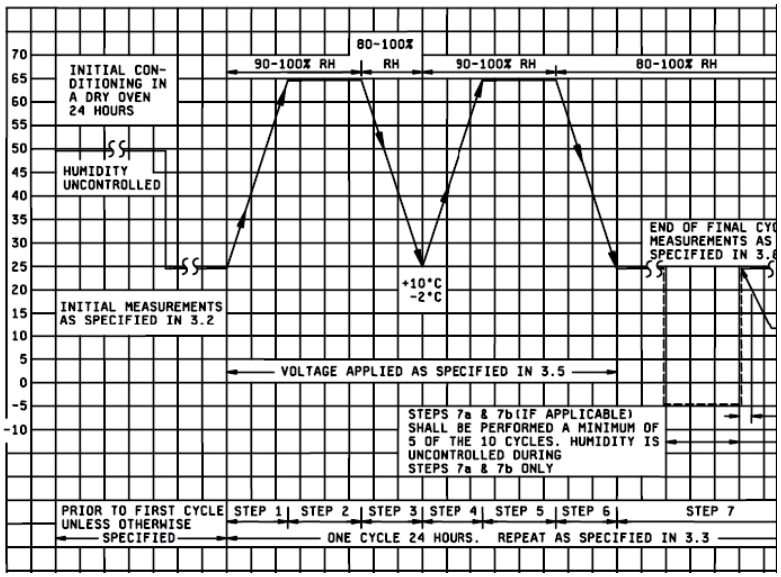

Fig. 6 Moisture resistant

TEST	TEST METHOD	PROCEDURE	REQUIREMENTS
Biased Humidity	AEC-Q200 7	1. Preconditioning, class 2 only: 150 +0/-10 °C /1 hour, then keep for 24 ±1 hour at room temp 2. Initial measure: Spec. refer to initial spec. C. D. I.R. Measuring voltage: 1.5V ± 0.1 VDC Note: Series with 100 KΩ 3. Test condition: 85 °C, 85% R.H. connected with 100 KΩ resistor, applied 1.5V/U_r for 1,000 hours. 4. Recovery: NP0: 6 to 24 hours X7R: 24 ±2 hours 5. Final measure: C. D. I.R.	No visual damage after recovery ΔC/C NP0: Within ±2% or 1 pF, whichever is greater X7R: ±15% D.F. NP0: ≤ 2 x specified value. X7R: ≤ 16V: ≤ 7% or specified value whichever is greater ≥ 25V: ≤ 5% or specified value whichever is greater I.R. Initial requirement: NP0: C ≤ 10 nF: I.R ≥ 10,000 MΩ or C > 10 nF: (I.R-100 KΩ) x C ≥ 100s. X7R: C ≤ 25 nF: I.R ≥ 4,000 MΩ or C > 25 nF: (I.R-100 KΩ) x C ≥ 100s. Final measurement: The insulation resistance shall greater than 10% of initial spec.

Operational Life	AEC-Q200	8	1. Preconditioning, class 2 only: 150 +0/-10 °C /1 hour, then keep for 24 ±1 hour at room temp 2. Initial measure: Spec: refer to initial spec C, D, IR 3. Endurance test: Temperature: X7R: 125 °C Specified stress voltage applied for 1,000 hours: Applied 2.0 x U_r for general products * High voltage series follows with below stress condition: Applied 1.5 x Ur for 200V, 250V series Applied 1.3 x Ur for 500V, 630V series Applied 1.2 x Ur for 1KV, 2KV, 3KV series 4. Recovery time: 24 ±2 hours 5. Final measure: C, D, IR Note: If the capacitance value is less than the minimum value permitted, then after the other measurements have been made the capacitor shall be preconditioned according to *"IEC 60384 4.1"* and then the requirement shall be met. * Applied 1.5 x Ur 0402/X7R/50V/>10nF 0603/X7R/25V/>220nF	No visual damage ΔC/C NP0: Within ±2% or 1 pF, whichever is greater X7R: ±15% D.F. NP0: ≤ 2 x specified value. X7R: ≤ 16V: ≤ 7% or specified value whichever is greater ≥ 25V: ≤ 5% or specified value whichever is greater IR NP0: ≥ 4,000 MΩ or IR x C_r ≥ 40s whichever is less X7R: ≥ 1,000 MΩ or IRx C_r ≥ 50s whichever is less * * IRx Cr ≥ 10s 0603/25V/>220nF
External Visual	AEC-Q200	9	Any applicable method using × 10 magnification	In accordance with specification
Physical Dimension	AEC-Q200	10	Verify physical dimensions to the applicable device specification.	In accordance with specification
Mechanical Shock	AEC-Q200	13	Three shocks in each direction shall be applied along the three mutually perpendicular axes of the test specimen (18 shocks) Peak value: 1,500 g's Duration: 0.5 ms Velocity change: 15.4 ft/s Waveform: Half-sin	ΔC/C NP0: Within ±0.5% or 0.5 pF, whichever is greater X7R: ±10% D.F. Within initial specified value IR Within initial specified value
Vibration	AEC-Q200	14	5 g's for 20 minutes, 12 cycles each of 3 orientations. Test from 10-2000 Hz.	ΔC/C NP0: Within ±0.5% or 0.5 pF, whichever is greater X7R: ±10% D.F: meet initial specified value IR meet initial specified value

Resistance to Soldering Heat	AEC-Q200	15	Precondition: 150 +0/–10 °C for 1 hour, then keep for 24 ±1 hours at room temperature Preheating: for size ≤ 1206: 120 °C to 150 °C for 1 minute Preheating: for size >1206: 100 °C to 120 °C for 1 minute and 170 °C to 200 °C for 1 minute Solder bath temperature: 260 ±5 °C Dipping time: 10 ±0.5 seconds Recovery time: 24 ±2 hours	Dissolution of the end face plating shall not exceed 25% of the length of the edge concerned ΔC/C Class1: NP0: Within ±1% or 0.5 pF, whichever is greater. Class2: X7R: ±10% D.F. within initial specified value IR within initial specified value
Thermal Shock	AEC-Q200	16	1. Preconditioning, class 2 only: 150 +0/-10 °C /1 hour, then keep for 24 ±1 hour at room temp 2. Initial measure: Spec: refer to initial spec C, D, IR 3. Rapid change of temperature test: NP0/X7R: -55 °C to +125 °C; 300 cycles 15 minutes at lower category temperature; 15 minutes at upper category temperature. 4. Recovery time: Class1: 6 to 24 hours Class2: 24 ±2 hours 5. Final measure: C, D, IR	No visual damage ΔC/C NP0: Within ±1% or 1 pF, whichever is greater X7R: ±15% D.F: meet initial specified value IR meet initial specified value
ESD	AEC-Q200	17	Per AEC-Q200-002	A component passes a voltage level if all components stressed at that voltage level pass.

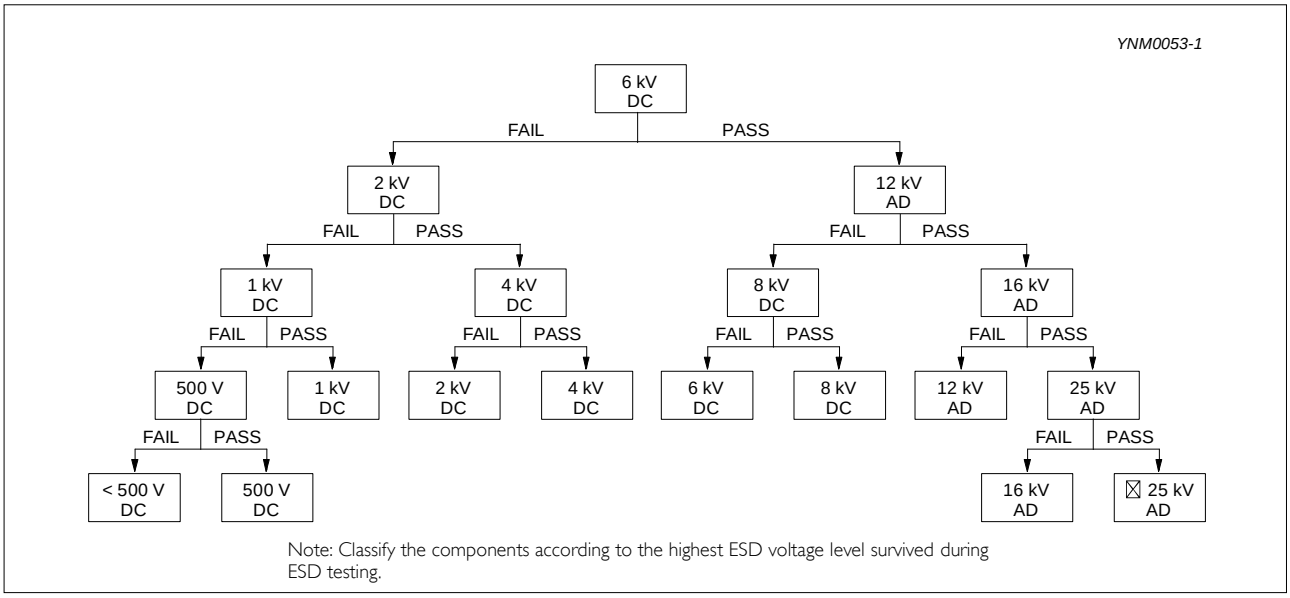

Fig. 7 Passive component HBM ESD test flow diagram (DC = Direct Contact Discharge, AD = Air Discharge)

Solderability	AEC-Q200	18	1. Preheat at 155°C for 4 hours. After preheating, immerse the capacitor in a solution of ethanol and rosin (25% rosin in weight proportion). Immerse in eutectic solder solution for 5+0/-0.5 seconds at 235±5°C. 2. Should be placed into steam aging for 8 hours±15 minutes. After preheating, immerse the capacitor in a solution of ethanol and rosin (25% rosin in weight proportion). Immerse in eutectic solder solution for 5+0/-0.5 seconds at 235±5°C. 3. Should be placed into steam aging for 8 hours±15 minutes. After preheating, immerse the capacitor in a solution of Ethanol and rosin (25% rosin in weight proportion). Immerse in eutectic solder solution for 120±5 seconds at 260±5°C.	The solder should cover over 95% of the critical area of each termination.
Electrical Characterization	AEC-Q200	19	Parametrically test per lot and sample size requirements, summary to show Min, Max, Mean and Standard deviation at room as well as Min and Max operating temperatures. NP0: -55 °C to +125 °C X7R: -55 °C to +125 °C Normal temperature: 20 °C	ΔC/C NP0: ±30 ppm/°C X7R: ±15%
Board Flex	AEC-Q200	21	Part mounted on a 100 mm X 40 mm FR4 PCB board, which is 1.6 ±0.2 mm thick and has a layer-thickness 35 μm ± 10 μm. Part should be mounted using the following soldering reflow profile. Conditions: Class1: Bending 3 mm at a rate of 1 mm/s, radius jig 340 mm Class2: Bending 2 mm at a rate of 1 mm/s, radius jig 340 mm Test Substrate:	No visible damage ΔC/C Class1: NP0: Within ±1% or 0.5 pF, whichever is greater Class2: X7R: ±10%

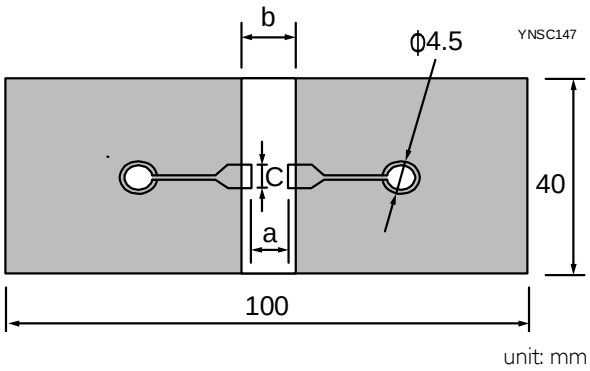

	Dimension(mm)		
Type	a	b	c
0201	0.3	0.9	0.3
0402	0.4	1.5	0.5
0603	1.0	3.0	1.2
0805	1.2	4.0	1.65
1206	2.2	5.0	1.65
1210	2.2	5.0	2.0
1808	3.5	7.0	3.7

Terminal Strength	AEC-Q200	22	With the component mounted on a PCB obtained with the device to be tested, apply a 17.7N (1.8Kg) force to the side of a device being tested. This force shall be applied for 60+1 seconds. Also the force shall be applied gradually as not to apply a shock to the component being tested. * Apply 2N force for 0402 size.	Magnification of 20X or greater may be employed for inspection of the mechanical integrity of the device body, terminals and body/terminal junction. Before, during and after the test, the device shall comply with all electrical requirements stated in this specification.
Beam Load Test	AEC-Q200	23	Place the part in the beam load fixture. Apply a force until the part breaks or the minimum acceptable force level required in the user specification(s) is attained.	≤ 0805 Thickness > 0.5mm: 20N Thickness ≤ 0.5mm: 8N ≥ 1206 Thickness ≥1.25 mm: 54N Thickness < 1.25 mm: 15N
Voltage Proof			1. Specified stress voltage applied for 1~5 seconds 2. Ur ≤ 100 V: series applied 2.5 Ur 3. 100 V < Ur ≤ 200 V series applied (1.5 Ur + 100) 4. 200 V < Ur ≤ 500 V series applied (1.3 Ur + 100) 5. Ur > 500 V: 1.3 Ur 6. Ur ≥ 1000 V: 1.2 Ur Charge/Discharge current is less than 50 mA	No breakdown or flashover

REVISION HISTORY

REVISION	DATE	CHANGE NOTIFICATION	DESCRIPTION
Version 13	Jul. 05, 2021	-	- Move out "Array" and "High Cap" to individual specification Add 0603 NPO 50V/100V 1.2nF to 2.2nF 0402 X7R 50V 15nF to 100nF 0603 X7R 25V 330nF to 680nF 0603 X7R 50V 150nF to 220nF 0603 X7R 100V 68nF to 100nF
Version 12	Feb. 26, 2021		- Add 0201/ X7R/ 50V / 100 pF to 1nF 0603/ X7R/ 16V / 680nF to 1μF 0603/ X7R/ 25V / 150nF / 220nF/ 1μF 1210/ X7R/ 50V / 4.7μF
Version 11	Jun. 29, 2018	-	- Add 0201 NPO 25V/ 50V, 0.2pF to 33pF, Add 0402 NPO 50V 270pF to 1nF, Add 0805 X7R 25V 2.2uF
Version 10	May. 2, 2018	-	- Add 0603 NPO 100V 820pF to 1nF, - Add 0805 NPO 50V to 100V, 1.2nF to 10nF, - Add 0805 X7R 16V 2.2uF, 50V 680nF to 1uF, - Add 1206 X7R 100V 330nF to 2.2uF, 250V 33nF to 100nF
Version 9	Mar. 22, 2018	-	- Add 0402 X7R 100nF 25~50V
Version 8	Nov. 22, 2017	-	- Add X7R/0201/25V/100pF~10nF
Version 7	Jul. 7, 2017	-	- Add X7R/0805/330nF to 470nF/50V, X7R/1206/10uF/6.3V
Version 6	Mar. 31, 2017	-	- Add NPO/0603/1nF/50V, X7R/0603/1uF/10V, X7R/0603/470nF/16V, X7R/0603/220nF/25V
Version 5	Nov. 15, 2016	-	- Add Soldering Condition
Version 4	Jun. 14, 2016	-	- Add X7R/0805/2.2uF/10V and NPO/1206/1.2nF to 1.5nF/250V
Version 3	Jul. 21, 2015	-	- Tests and Requirements update
Version 2	Jul. 17, 2014	-	- Tests and Requirements update
Version 1	Apr. 19, 2013	-	- Capacitance range update
Version 0	Dec. 25, 2012	-	- New

LEGAL DISCLAIMER

YAGEO, its distributors and agents (collectively, "YAGEO"), hereby disclaims any and all liabilities for any errors, inaccuracies or incompleteness contained in any product related information, including but not limited to product specifications, datasheets, pictures and/or graphics. YAGEO may make changes, modifications and/or improvements to product related information at any time and without notice.

YAGEO makes no representation, warranty, and/or guarantee about the fitness of its products for any particular purpose or the continuing production of any of its products. To the maximum extent permitted by law, YAGEO disclaims (i) any and all liability arising out of the application or use of any YAGEO product, (ii) any and all liability, including without limitation special, consequential or incidental damages, and (iii) any and all implied warranties, including warranties of fitness for a particular purpose, non -infringement and merchantability.

YAGEO products are designed for general purpose applications under normal operation and usage conditions. Please contact YAGEO for the applications listed below which require especially high reliability for the prevention of defects which might directly cause damage to the third party's life, body or property: Aerospace equipment (artificial satellite, rocket, etc.), Atomic energy-related equipment, Aviation equipment, Disaster prevention equipment, crime prevention equipment, Electric heating apparatus, burning equipment, Highly public information network equipment, data-processing equipment , Medical devices, Military equipment, Power generation control equipment, Safety equipment, Traffic signal equipment, Transportation equipment and Undersea equipment, or for any other application or use in which the failure of YAGEO products could result in personal injury or death, or serious property damage. Particularly **YAGEO Corporation and its affiliates do not recommend the use of commercial, automotive, and/or COTS grade products for high reliability applications or manned space flight.**

Information provided here is intended to indicate product specifications only. YAGEO reserves all the rights for revising this content without further notification, as long as products are unchanged. Any product change will be announced by PCN.