BackLED Plus

LED Chain Signage Modules

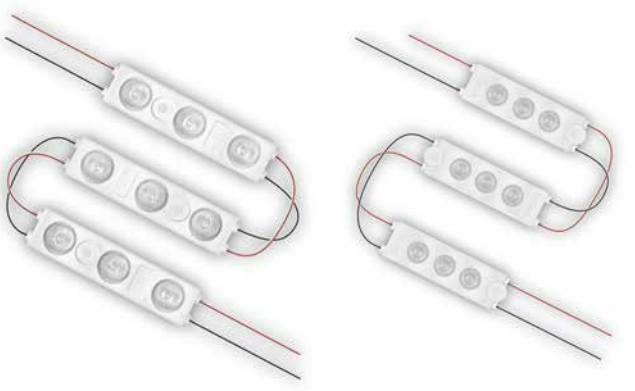

Key Features & Benefits

- Single board cuttable chain of LED modules with flexible connection cables
- The 150° distribution of our Flat-Ray optical lens ensures a bright, uniformly illuminated sign face
- Ideal for shallower signs – 3"-6" deep
- BackLED L Plus is designed for large stroke letters with high brightness requirements
- BackLED M Plus is designed for medium to smaller sized channel letters
- BackLED M Plus is available in either white or red LEDs
- Fully intergrated heat sink
- IP66 rated to protect against dust, moisture, and condensation in outdoor operation
- Fast accurate installation is simplified through pre-mounted adhesive tape and mounting holes
- Optimal operation on OPTOTRONIC® 12VDC and 12VDC dimmable power supplies

The BackLED Plus family of LED chain modules are ideal products to illuminate channel letter signage with shallower depth faces. These modules utilize Flat-Ray optical lens technology to ensure uniform illumination at the sign face, even at minimal depths. They are available in two sizes and four color temperatures to meet the requirements of any application. The BackLED L Plus modules are designed for high brightness requirements in large stroke letters.They ship in 21 foot chains consisting of 32 modules–each with 3 LEDs. The BackLED M Plus are available in white and red and are designed for medium to smaller sized channel letters. They ship in 20 foot chains consisting of 40 modules–each with 3 LEDs.

All modules are connected via flexible cables and are single board cuttable creating a custom fit for each installation. Fast, accurate installation is simplified through pre-mounted adhesive tape and mounting holes. These modules are IP66 rated creating a seal against dust and moisture.

All BackLED Plus modules are optimally paired with OPTOTRONIC® 12VDC power supplies, available in both dimming and non-dimming models. These modules are listed in the UL Sign Components Manual (SAM) for new signage installations and are UL Classified for retrofit installations when paired with our OTOTRONIC power supplies.

Product Offering

Type	Ordering Abbreviation	Lumens/ft.	Color
BackLED L Plus	BA-L-PL-830	190	3000K
BackLED L Plus	BA-L-PL-840	205	4000K
BackLED L Plus	BA-L-PL-850	209	5000K
BackLED L Plus	BA03LA-W4F-865	195	6500K
BackLED M Plus	BA03MA-W4F-830	100	3000K
BackLED M Plus	BA03MA-W4F-840	115	4000K
BackLED M Plus	BA03MA-W4F-865	135	6500K
BackLED M Plus	BA03MA-R2	27.5	Red (625nm)

Application Information

Applications

- Backlighting of small, medium or large channel letters
- Signage and illuminated advertising

Specifications and Certifications

Listed in the Sign Components Manual (SAM) (File# E258264)

BackLED Plus modules are UL Classified for sign retrofits when paired with our OPTOTRONIC power supplies. (UL File # E311887)

Specification Data

Catalog #	Type
Project	
Comments	
Prepared by	

Ordering Information

Item Number	Ordering Abbreviation	Length (ft.)	Number of Modules	Module Pitch (in)	Color Temperature	Voltage (V_{DC})	Power per Module (W)[1]	Lumens per Module	Watts/ft	Lumens/ft	LPW	Case Qty.
73664	BA-L-PL-830	21	32	7.9	3000K	12	1.56	125	2.38	190	80	5
73665	BA-L-PL-840	21	32	7.9	4000K	12	1.56	135	2.38	205	86	5
73744	BA-L-PL-850	21	32	7.9	5000K	12	1.56	137	2.38	209	88	5
71279	BA03LA-W4F-765	21	32	7.9	6500K	12	1.8	127	2.74	195	70	5
71282	BA03MA-W4F-830	20	40	6	3000K	12	0.72	50	1.44	100	69	5
71283	BA03MA-W4F-840	20	40	6	4000K	12	0.72	57	1.44	115	79	5
71284	BA03MA-W4F-765	20	40	6	6500K	12	0.72	68	1.44	135	94	5
71285	BA03MA-R2	20	40	6	625nm	12	0.72	14	1.44	27.5	19	5

Nominal ratings at ambient of 25°C.

Notes:
1. All data is related to the entire module. Data reflects statistical mean values. Actual data may differ depending on variances in the manufacturing process.

Performance values were taken at steady state. Instant-on measurements may be higher.

Ordering Guide

B	A	03	LA	-	W	4F	-	8	30
B=BackLED	A=Plus	Number of LEDs per Module	LA=Large MA=Medium		W=White	LED Generation		CRI > 80	Color Temperature 30=3000K 40=4000K 65=6500K

BA	-	L	-	PL	-	8	30
BA=BackLED		L=Large		PL=Plus (Flat Ray Technology)		CRI > 80	Color Temperature 30=3000K 40=4000K 50=5000K

Power Supply Information

Item Number	Ordering Description	BackLED L Plus Max. No. of Modules	BackLED M Plus Max. No. of Modules
51604	OT20W/12V/UNV	9	22
51632	OT60W/12V/UNV	28	72
51633	OT60W/12V/UNV/DIM	28	72

Minimum and Maximum Ratings

Parameter	BackLED L Plus Values	BackLED M Plus Values
Operating Temperature at Tc point	-25 to +75°C (-13 to +167°F)	-25 to +70°C (-13 to +158°F)
Storage Temperature Range	-25 to +85°C (-13 to +185°F)	-25 to +85°C (-13 to +185°F)
Voltage Range	11.5–13V_{DC}	11.5–13V_{DC}

Notes:
1. Exceeding maximum ratings for operating and storage temperature will reduce expected lifetime or destroy the LED module.
2. Exceeding maximum ratings for operating voltage will cause hazardous overload and will likely destroy the LED module.
3. The temperature of the LED module must be measured at the Tc point according to EN60598-1 in a thermally constant status with a temperature sensor or a temperature sensitive label.

Assembly Diagram

BackLED L Plus

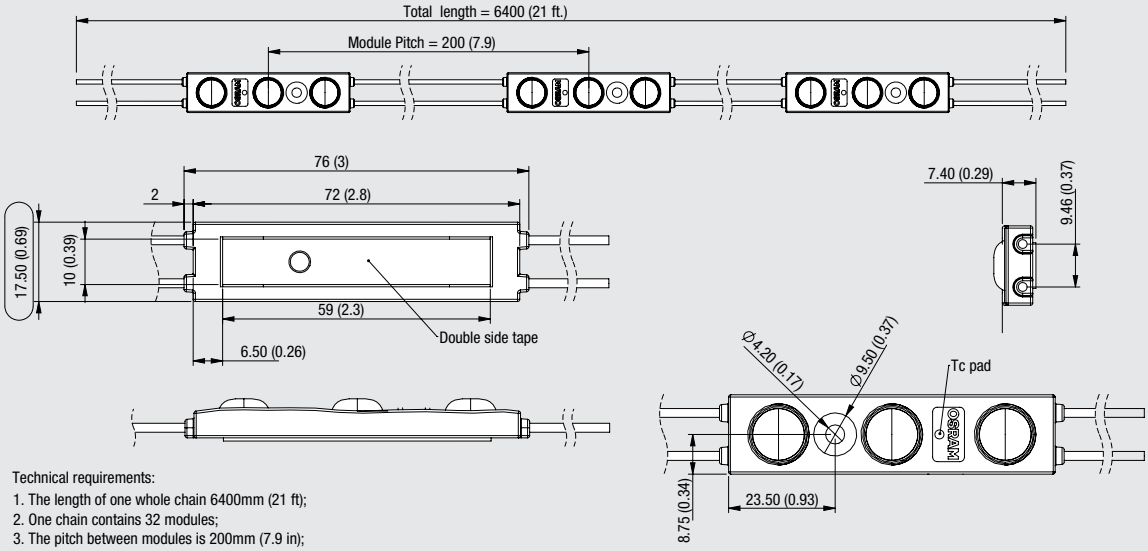

Technical requirements:
1. The length of one whole chain 6400mm (21 ft);
2. One chain contains 32 modules;
3. The pitch between modules is 200mm (7.9 in);
4. All dimensions in mm (in) unless noted.

BackLED M Plus

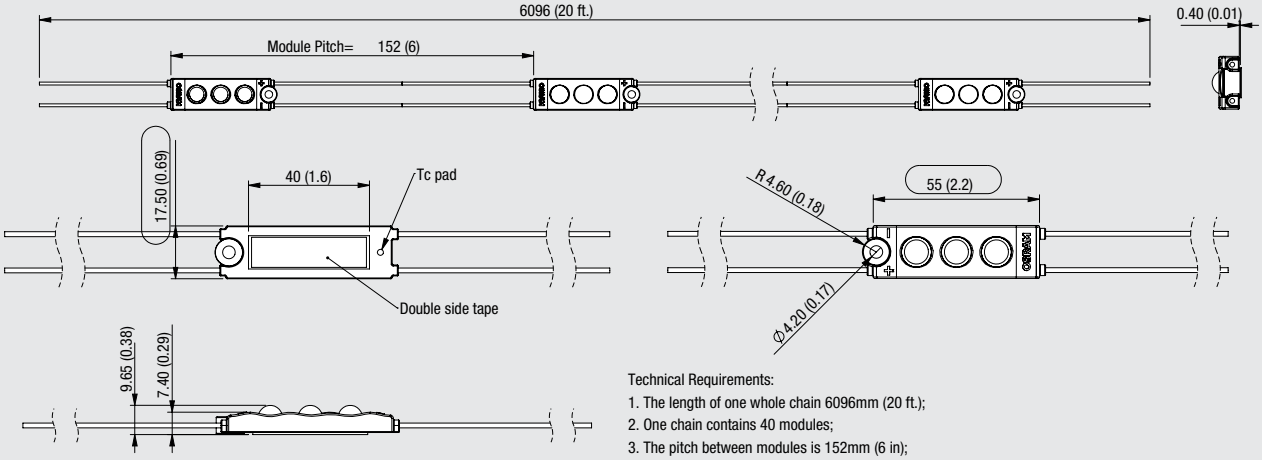

Technical Requirements:
1. The length of one whole chain 6096mm (20 ft.);
2. One chain contains 40 modules;
3. The pitch between modules is 152mm (6 in);
4. All dimensions in mm (in) unless noted.

Wiring Diagram

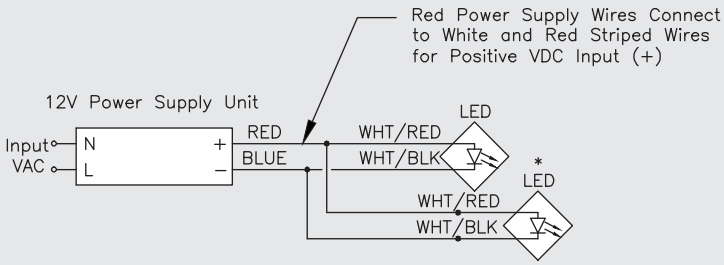

* See Power Supply information Table for Maximum loading guidelines

LEGEND:
- ● Splice Point
- ■ Potential Splice Point
- 1 LED Module (UON)

Safety Information

WARNING: ONLY QUALIFIED PERSONNEL SHOULD PERFORM INSTALLATION. TO AVOID ELECTRICAL SHOCK OR COMPONENT DAMAGE, DISCONNECT POWER BEFORE ATTEMPTING INSTALLATION OF THE POWER SUPPLIES AND/OR MODULES.

Failure to install the power supplies and/or LED modules in accordance with the National Electric Code (NEC), all applicable Federal, State and local electric codes as well as the specific Underwriters Laboratories (UL) safety standards for the installation, location and application may cause serious personal injury, death, property damage and/or product malfunction.

1. The LED module itself and all its components shall not be subjected to mechanical stress and assembly must not damage or destroy conducting paths on the circuit board.
2. Installation of LED modules shall be made with regard to all applicable electrical and safety standards.Only qualified personnel should be allowed to perform installations.
3. Observe correct electrical polarity, incorrect polarity may destroy the module.
4. Electrostatic Discharge (ESD) precautions shall be incorporated when handling or installing the module.(For more information, reference document # LED093 ESD Protection for LED Systems.)
5. Circuit boards should be attached securely to the intended substrate, but do not over-tighten screws or rivets. Heavy vibration should be avoided.

Assembly Information

1. Mounting tape is provided as an installation aid only, not for permanent adhesion. It is recommended all modules are secured to the mounting surface using screws of appropriate size.
2. Do not over-tighten mounting screws as over-torque could damage the module housing. Do not exceed 30 in-lbs torque.
3. The LED module shall not be subject to mechanical stress or heavy vibration.
4. When using power supplies other than OSRAM OPTOTRONIC®, power supply voltage must not fall below 12V_{DC}.
5. For complete installation instructions, refer to BackLED Plus Installation Instructions LED349.

Warranty

5 Year Full System Warranty. Please Refer to Signage Warranty (LED087).

OSRAM

Americas Headquarters

OSRAM SYLVANIA Inc.
200 Ballardvale Street
Wilmington, MA 01887 USA
Phone 1-800-LIGHTBULB (1-800-544-4828)
www.osram-americas.com

OSRAM, LED CREATING TOMORROW and OPTOTRONIC are registered trademarks of OSRAM GmbH.
Specifications subject to change without notice.

© 2015 OSRAM SYLVANIA