AR30 and DR30
General information

The full range of the contact blocks and transformer units suitable for the AR22 and DR22 series may also be fitted to the AR30 and DR30 series.

■ Features

Quick-replacement contact blocks and transformer units
The snap-on construction makes replacement and addition of contact blocks and transformer units very simple and straightforward.

Oil-and dust-proof operator module construction
The protection level of the AR30/DR30 operator modules conforms to IEC Standard IP65. The special seals protect the operator modules and switch mechanisms against oil, dust, and grime, thus ensuring high performance in dusty and moist environments.

Miniaturization
- Selector switches with 1NO+1NC: 41mm deep
  Pilot lights: 34mm deep
- The transformer now occupies far less space.

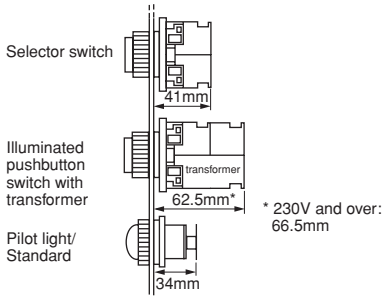

Illuminated pushbuttons

AF95-4

AR30E0L

AF95-6

AR30G3L

Pushbuttons

AF95-10

AR30E0R

AF95-12

AR30M0R

Pilot lights

AF95-18

DR30D0L

Selectors

AF95-13

AR30PR

Emergency stop pushbuttons

AF97-75

AR30V0L

AF97-69

AR30V0R

AF97-68

AR30V1R

Self-cleaning contacts
All the contacts are double break type and feature self-cleaning action.
Every time the switch is operated, the contact surfaces are wiped with a sliding movement, thus ensuring high contact reliability even at low voltage and small current levels (5V, 5mA).

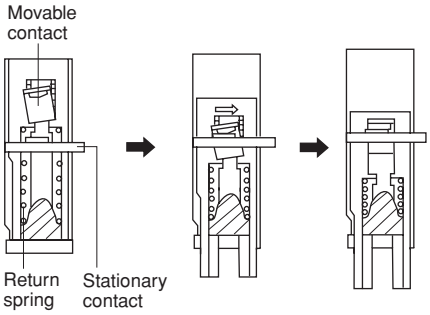

Metal nut
Safer model with metal nut is also available

Wiring
- Wiring from two directions is possible.
- Wiring in both vertical and lateral directions facilitates wiring in narrow spaces.
- Color coding of contact blocks makes wiring easy.
  1NO: Blue, 1NC: Red
  Lamp terminal and transformer unit: Black

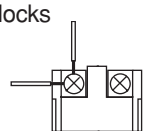

Safety
- A terminal cover is provided, assuring safety and security.
- FUJI's original Trigger Action mechanism is used in the emergency stop pushbuttons. They are suitable for emergency stop and safety. This mechanism prevents the contacts from moving until the button is pushed and locked.

Protection
- Excellent oil-tight construction (IP65) of the operator.
- Closure of the contact block has been improved.

■ Approvals

For further information related to approved type, *see page 04/59 to 04/62.*

■ Illuminated pushbutton switches

Operator	Type	Operator	Type	Operator	Type
Extended round head *See page 04/74, 04/97*	**AR30E0L, E5L** AF95-4	Extended with full guard (24mm dia. with openings) *See page 04/74, 04/97*	**AR30G2L, G7L** AF99-328	Push-lock, turn-reset (40mm dia. with white arrow) *See page 04/74, 04/98*	**AR30V5L** AF97-75
Extended with transparent full guard (24mm dia.) *See page 04/74, 04/97*	**AR30G4L, G9L** KKD05-164	Extended with full guard (24mm dia.) *See page 04/74, 04/97*	**AR30G3L, G8L** AF95-6	Push-pull *See page 04/74, 04/98*	**AR30Q7L** AF96-185

■ Pushbutton switches

Operator	Type	Operator	Type	Operator	Type
Flush round head *See page 04/76, 04/99*	**AR30F0R, F5R** AF95-11	Mushroom head (29mm dia.) *See page 04/76, 04/99*	**AR30M4R** AF95-8	Mushroom head with full guard (35mm dia. metal nut) *See page 04/76, 04/99*	**AR30GSR** AF96-239
Extended round head *See page 04/76, 04/99*	**AR30E0R, E5R** AF95-10	Extended with full guard (24mm dia.) *See page 04/76, 04/99*	**AR30G1R, G6R** AF95-16	Giant head *See page 04/76, 04/100*	**AR30B0R** AF95-579
Flush round head Symbol mark type *See page 04/76, 04/99*	**AR30FAR, FBR** AF98-195	Extended with half guard *See page 04/76, 04/99*	**AR30G0R, G5R** AF95-9	Giant head with guard *See page 04/76, 04/100*	**AR30B1R** AF95-582
Extended round head Symbol mark type *See page 04/76, 04/99*	**AR30EAR, EBR** AF98-194	Pin lock *See page 04/76, 04/99*	**AR30GPR** AF96-240	Giant head with full guard *See page 04/76, 04/100*	**AR30B2R** AF95-580
Mushroom head (40mm dia.) *See page 04/76, 04/99*	**AR30M0R, M5R** AF95-12	Mushroom head with full guard (40mm dia.) *See page 04/76, 04/99*	**AR30M3R, M8R** AF95-17	Giant head with full guard *See page 04/77, 04/100*	**AR30B3R** AF95-581

Note: AR30M8R: Not approved standard (CCC) : *See page 04/242*

■ Pushbutton switches

Operator	Type	Operator	Type	Operator	Type
Pushbutton with selector ring (2-position) *See page 04/78, 04/100*	**AR30S1R, S2R, S3R, S6R** AF97-506	Push-lock, turn-reset (40mm dia. with white arrow) *See page 04/77, 04/100*	**AR30V5R** AF97-69	Pushbutton with emergency operating cap *See page 04/77, 04/100*	**AR30FVR** AF96-187
Push, turn-lock *See page 04/77, 04/100*	**AR30N0R** AF95-583				

■ Emergency stop pushbutton switches (conform to EN418)

Operator	Type	Operator	Type	Operator	Type
Push-lock, turn-reset (Soft-touch 40mm dia. with white arrow) *See page 04/79, 04/101*	**AR30V0R** AF97-69	Push-lock, turn-reset (65mm dia.with white arrow) *See page 04/79, 04/101*	**AR30V1R** AF97-68	Push-lock, pull-reset (35mm dia.) *See page 04/79, 04/101*	**AR30Q2R** AF95-3
Push-lock, turn-reset (40mm dia.) *See page 04/79, 04/101*	**AR30V2R** AF95-176				

Notes: Provided with the ⊖ (Direct opening action)

■ Emergency stop illuminated pushbutton switches (conform to EN418)

Operator	Type	Operator	Type
Push-lock, turn-reset (Soft-touch 40mm dia. with white arrow) *See page 04/80, 04/101*	**AR30V0L** AF97-75	Push-lock, turn-reset (40mm dia.) *See page 04/80, 04/101*	**AR30V2L** AF95-2

Note: Provided with the ⊖ (Direct opening action)
((((: *See page 04/242*

■ Selector switches

Operator	Type	Operator	Type	Operator	Type
Knob *See page 04/81, 04/102*	**AR30PR, PCR** AF95-13	Key *See page 04/81, 04/102*	**AR30JR, JCR** AF95-15	Key (Long durability) *See page 04/81, 04/102*	**AR30JAR** AF95-15
Lever *See page 04/81, 04/102*	**AR30WR, WCR** AF95-14				

■ Illuminated selector switches

Operator	Type
Knob *See page 04/88, 04/102*	**AR30PL** AF95-5

■ Pilot lights

Lens	Type	Lens	Type	Lens	Type
Dome *See page 04/90, 04/103*	**DR30D0L** AF95-18	Dome with dimmer control *See page 04/90, 04/104*	**DR30D1L** AF02-63	Flush square (40mm sq. transparent lens) *See page 04/92, 04/105*	**DR30M4M *** AF97-63
Extended round *See page 04/90, 04/103*	**DR30E3L** AF95-20	Flush square (34mm sq. transparent lens) *See page 04/92, 04/105*	**DR30F4M *** AF97-65		
Faceted *See page 04/90, 04/104*	**DR30K0L** AF95-19	Flush rectangular (Transparent lens) *See page 04/92, 04/105*	**DR30F4N *** AF97-64		

Note: With resistor unit and resistor types: Not approved standard
* LED 12V AC type: Not approved standard
: *See page 04/242*

■ Joy stick selector switches

Handle	Type	Handle	Type	Handle	Type
Ball type *See page 04/93, 04/106*	**AR30A0, A5** AF97-48	Ball type with lock *See page 04/93, 04/106*	**AR30A1, A6** AF97-44	Rubber cap type *See page 04/93, 04/106*	**AR30A2, A7** AF97-57

■ Buzzers

Sound	Type	Sound	Type	Sound	Type
Electronic sound *See page 04/94, 04/107*	**DR30B5*** AF96-381	Magnetic sound *See page 04/94, 04/107*	**DR30B0** AF96-378	Electronic sound (IP54) *See page 04/94, 04/107*	**DR30B8 *** AF96-245
Electronic sound (economy) *See page 04/94, 04/107*	**DR30B6** KK02-17				

Note: * 6V AC, 110V DC types: Not approved standard

■ Numerical indicators

Display	Type	Display	Type
One-digit *See page 04/95, 04/108*	**DR30N1** KK02-55B	Two-digit *See page 04/95, 04/108*	**DR30N2** KK02-56B

Discontinued
Discontinued

Illuminated pushbuttons

AR30 E0L – 10 E3 R □
① ② ③ ④ ⑤ ⑥

① **Product category**
AR30: 30mm-dia. illuminated pushbutton
30mm-dia. emergency stop illuminated pushbutton

② **Operator**
• Illuminated pushbutton
E0L: Extended round head
E5L: Extended round head (Alternate)
G4L: Extended with transparent full guard (24mm dia.)
G9L: Extended with transparent full guard (24mm dia. alternate)
G2L: Extended with full guard (24mm dia. with openings)
G7L: Extended with full guard (24mm dia. with openings, alternate)
G3L: Extended with full guard (24mm dia.)
G8L: Extended with full guard (24mm dia. alternate)
V5L: Push-lock, turn-reset (40mm dia. with white arrow) *1
Q7L: Push-pull
• Emergency stop illuminated pushbutton
V0L: Push-lock, turn-reset (Soft-touch 40mm dia. with white arrow)
V2L: Push-lock, turn-reset (40mm dia.)

③ **Contact arrangement**

10: 1NO	30: 3NO
01: 1NC	03: 3NC
11: 1NO+1NC	33: 3NO+3NC
20: 2NO	40: 4NO
02: 2NC	04: 4NC
22: 2NO+2NC	50: 5NO
	05: 5NC

④ **Lamp voltage**
• Incandescent lamp
54: 5.5V AC/DC, without transformer
C4: 15V AC/DC, without transformer
D4: 20V AC/DC, without transformer
E4: 24V AC/DC, without transformer
H4: 100-110V AC, with transformer
L4: 115-127V AC, with transformer
M4: 200-220V AC, with transformer
Q4: 230-254V AC, with transformer
S4: 350-380V AC, with transformer
T4: 400-440V AC, with transformer
V4: 480V AC, with transformer
W4: 500-550V AC, with transformer
• LED lamp
A3: 6V AC, without transformer
63: 6V DC, without transformer
B3: 12V AC/DC, without transformer
C3: 15V AC/DC, without transformer
E3: 24V AC/DC, without transformer
H3: 100-110V AC, with transformer
L3: 115-127V AC, with transformer
M3: 200-220V AC, with transformer
Q3: 230-254V AC, with transformer
S3: 350-380V AC, with transformer
T3: 400-440V AC, with transformer
V3: 480V AC, with transformer
W3: 500-550V AC, with transformer

⑤ **Color of lens**

G: Green	Y: Yellow
R: Red *2	A: Orange
W: White	S: Blue

⑥ **Special product**
Z9: Resisting water-soluble cutting oils and heat
Z8: With a contact protection cover
Z4: Resisting sulfuration gas
ZB: Meeting IP2X finger-protection standards
ZM: Metal nut

Notes: *1 Products with no trigger action mechanism. These products cannot be used as emergency stop switches that comply with EN standards.
*2 Button color of emergency stop illuminated switches are Red only.
• The manufacturing range varies depending on the model. For details, refer to the contents of this catalog.

AR30 and DR30
Type number nomenclature

Pushbuttons

AR30 E0R – 10 R □ □
① ② ③ ④ ⑤ ⑥

① Product category
AR30: 30mm-dia. pushbutton
30mm-dia. emergency stop pushbutton

② Operator
- Pushbutton switch

F0R: Flush round head
F5R: Flush round head (Alternate)
E0R: Extended round head
E5R: Extended round head (Alternate)
FAR: Flush round head (Symbol mark type)
FBR: Flush round head (Symbol mark type, alternate)
EAR: Extended round head (Symbol mark type)
EBR: Extended round head (Symbol mark type, alternate)
M0R: Mushroom head (40mm dia.)
M5R: Mushroom head (40mm dia. Alternate)
M4R: Mushroom head (29mm dia.)
G1R: Extended with full guard (24mm dia.)
G6R: Extended with full guard (24mm dia. Alternate)
GPR: Pin lock
G0R: Extended with half guard
G5R: Extended with half guard (Alternate)
M3R: Mushroom head with full guard (40mm dia.)
M8R: Mushroom head with full guard (40mm dia. Alternate)
GSR: Mushroom head with full guard (35mm dia. metal nut)
B0R: Giant head
B1R: Giant head with guard
B2R: Giant head with full guard
B3R: Giant head with full guard
S1R: Pushbutton with selector ring (2-position)
S2R: Pushbutton with selector ring (2-position)
S3R: Pushbutton with selector ring (2-position)
S6R: Pushbutton with selector ring (2-position)
N0R: Push, turn-lock
V5R: Push-lock, turn-reset (40mm dia. with white arrow) *1
FVR: Pushbutton with emergency operating cap
- Emergency stop pushbutton switch

V0R: Push-lock, turn-reset (Soft-touch 40mm dia. with white arrow)
V2R: Push-lock, turn-reset (40mm dia.)
V1R: Push-lock, turn-reset (Soft-touch 65mm dia. with white arrow)
Q2R: Push-lock, pull-reset (35mm dia.)

③ Contact arrangement

10: 1NO	30: 3NO
01: 1NC	03: 3NC
11: 1NO+1NC	33: 3NO+3NC
20: 2NO	40: 4NO
02: 2NC	04: 4NC
22: 2NO+2NC	44: 4NO+4NC
	50: 5NO
	05: 5NC

④ Color of button

G: Green	Y: Yellow
R: Red*2	A: Orange
B: Black	S: Blue
W: White	C: Clear (For AR30FAR, FBR, EAR, EBR)
T: Green, Red, Black (For AR30F0R)	

⑤ Symbol mark (For AR30FAR, FBR, EAR, EBR)

Symbol mark	◯		I		Ⓣ		◯	I	Ⓣ
Color of button	White	Black	White	Black	White	Black	Clear		
Color of mark	Red		Green		Green		Black		
Code	01	02	03	04	11	12	02B	04B	12B

⑥ Special product
Z9: Resisting water-soluble cutting oils and heat
Z8: With a contact protection cover
Z4: Resisting sulfuration gas
ZB: Meeting IP2X finger-protection standards
ZM: Metal nut

Notes: *1 Products with no trigger action mechanism. These products cannot be used as emergency stop switches that comply with EN standards.
*2 Button color of emergency stop switches are Red only.
- The manufacturing range varies depending on the model. For details, refer to the contents of this catalog.

Selector and illuminated selector switches

AR30 PL – 2 □ 10 E3 G □ □
① ② ③ ④ ⑤ ⑥ ⑦ ⑧ ⑨

① **Product category**
AR30: 30mm dia. selector switch and illuminated selector switch

② **Operator**
- Selector switch

PR: Knob
PCR: Knob operated control type
WR: Lever
WCR: Lever operated control type
JR: Key
JCR: Key operated control type
JAR: Key (Long durability)
- Illuminated selector switch

PL: Knob

③ **Operation**
2: 2-position, maintained
0: 2-position, spring return
3: 3-position, maintained
6: 3-position, spring/manual return (Left to center)
7: 3-position, spring/manual return (Right to center)
1: 3-position, spring return
4: 4-position, maintained (For AR30PCR, WCR)
5: 5-position, maintained (For AR30PCR, WCR)

④ **Key removable position**
A: Left
B: Left and right
C: Left, right and center
D: Right
E: Center
F: Right and center
G: Left and center

⑤ **Contact arrangement**

10: 1NO	30: 3NO
01: 1NC	03: 3NC
11: 1NO+1NC	33: 3NO+3NC
20: 2NO	40: 4NO
02: 2NC	04: 4NC
22: 2NO+2NC	44: 4NO+4NC
	50: 5NO
	05: 5NC

Note: Control type: *See page 04/85 to 04/87*

⑥ **Lamp voltage**
- Incandescent lamp

54: 5.5V AC/DC, without transformer
C4: 15V AC/DC, without transformer
D4: 20V AC/DC, without transformer
E4: 24V AC/DC, without transformer
H4: 100-110V AC, with transformer
L4: 115-127V AC, with transformer
M4: 200-220V AC, with transformer
Q4: 230-254V AC, with transformer
S4: 350-380V AC, with transformer
T4: 400-440V AC, with transformer
V4: 480V AC, with transformer
W4: 500-550V AC, with transformer
- LED lamp

A3: 6V AC, without transformer
63: 6V DC, without transformer
B3: 12V AC/DC, without transformer
C3: 15V AC/DC, without transformer
E3: 24V AC/DC, without transformer
H3: 100-110V AC, with transformer
L3: 115-127V AC, with transformer
M3: 200-220V AC, with transformer
Q3: 230-254V AC, with transformer
S3: 350-380V AC, with transformer
T3: 400-440V AC, with transformer
V3: 480V AC, with transformer
W3: 500-550V AC, with transformer

⑦ **Color of knob**
B: Black (Not available for illuminated selector switch)
G: Green
R: Red
W: White (Not available for selector switch)
Y: Yellow (Not available for selector switch)
A: Orange (Not available for selector switch)
S: Blue (Not available for selector switch)

⑧ **Key type No.**
A, B, C, D, E or F
("A" is standard)

⑨ **Special product**
Z9: Resisting water-soluble cutting oils and heat
Z8: With a contact protection cover
Z4: Resisting sulfuration gas
ZB: Meeting IP2X finger-protection standards
ZM: Metal nut

Note: • The manufacturing range varies depending on the model. For details, refer to the contents of this catalog.

AR30 and DR30
Type number nomenclature

Pilot lights

DR30 D0L – E3 W □
① ② ③ ④ ⑤

① **Product category**
DR30: 30mm dia. pilot light

② **Lens**
D0L: Dome
E3L: Extended round
K0L: Faceted
D1L: Dome with dimmer control
F4M: Flush square (34mm sq. transparent lens)
F4N: Flush rectangular (Transparent lens)
M4M: Flush square (40mm sq. transparent lens)

③ **Lamp voltage**
- Incandescent lamp

54: 5.5V AC/DC, without transformer
C4: 15V AC/DC, without transformer
D4: 20V AC/DC, without transformer
E4: 24V AC/DC, without transformer
H4: 100-110V AC, with transformer
L4: 115-127V AC, with transformer
M4: 200-220V AC, with transformer
Q4: 230-254V AC, with transformer
S4: 350-380V AC, with transformer
T4: 400-440V AC, with transformer
V4: 480V AC, with transformer
W4: 500-550V AC, with transformer
FQ: 50V DC, with resistor*
HQ: 110V DC, with resistor*
MQ: 220V DC, with resistor*
H8: 100-110V AC, short-body with transformer
L8: 115-127V AC, short-body with transformer
M8: 200-220V AC, short-body with transformer

- LED lamp

A3: 6V AC, without transformer
63: 6V DC, without transformer
B3: 12V AC/DC, without transformer
C3: 15V AC/DC, without transformer
E3: 24V AC/DC, without transformer
H3: 100-110V AC, with transformer
L3: 115-127V AC, with transformer
M3: 200-220V AC, with transformer
Q3: 230-254V AC, with transformer
S3: 350-380V AC, with transformer
T3: 400-440V AC, with transformer
V3: 480V AC, with transformer
W3: 500-550V AC, with transformer
H7: 110V DC, with resistor unit
FR: 50V DC, with resistor*
HR: 110V DC, with resistor*
MR: 220V DC, with resistor*
H9: 100-110V AC, short-body with transformer
L9: 115-127V AC, short-body with transformer
M9: 200-220V AC, short-body with transformer

- LED unit

(For DR30F4M, F4N, M4M type)
65: 6V DC, without transformer
25: 12V AC, without transformer
B5: 12V AC/DC, without transformer
E5: 24V AC/DC, without transformer
H5: 100-110V AC, with transformer
L5: 115-127V AC, with transformer
M5: 200-220V AC, with transformer
Q5: 230-254V AC, with transformer
S5: 350-380V AC, with transformer
T5: 400-440V AC, with transformer
V5: 480V AC, with transformer
W5: 500-550V AC, with transformer
HE: 110V DC, with resistor unit

Note: * DR30D0L, K0L type only

④ **Color of lens or color plate**
G: Green
R: Red
W: White
Y: Yellow
A: Orange
S: Blue

⑤ **Special product**
Z9: Resisting water-soluble cutting oils and heat
Z4: Resisting sulfuration gas
ZB: Meeting IP2X finger-protection standards
ZM: Metal nut

Note: • The manufacturing range varies depending on the model. For details, refer to the contents of this catalog.

Joy stick selector switches

AR30A 0 N – A0A0 B
① ②③ ④ ⑤

① **Product category**
AR30A: 30mm-dia. Joy stick selector switch

② **Handle**
0: Ball type (without lock, manual return)
1: Ball type with lock (manual return)
2: Rubber cap type (without lock, manual return)
5: Ball type (without lock, spring return)
6: Ball type with lock (spring return)
7: Rubber cap type (without lock, spring return)

③ **Terminal**
N: Screw
H: Solder/tab

④ **Contact arrangement**

Contact arrangement		Blank	1NO	1NC	1NO+1NC	2NO	2NC	2NO+2NC
Code	Screw	0	A	B	1	D	E	–
	Solder/tab	0	–	–	1	–	–	2

Operating direction code of contacts

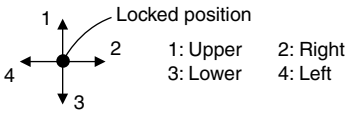

Ex. AR30A0N-A0A0B
1 2 3 4

⑤ **Handle color**
B: Black

■ **Ordering information**
Specify the following:
1. Type number
For the CCC approved product, add the suffix **(CCC)** to the type number

Example: Pushbutton switch AR30F0R-11B**(CCC)**

Buzzers

DR30B 5 – E B
① ② ③④

① **Product category**
DR30B: 30mm-dia. buzzer

② **Sound**
5: Electronic sound
6: Electronic sound (economy)
0: Magnetic sound
8: Electronic sound (IP54)

③ **Operating voltage**
A: 6V AC (Type “5”, “8”)
6: 6V DC (Type “5”, “8”)
E: 12-24V AC/DC (Type “6” : 24V DC)
F: 35-48V AC/DC (Type “5”, “8”)
G: 24V AC (Type “6”)
H: 100-110V AC
M: 200-220V AC
1: 100-110V DC (Type “5”, “8”)

④ **Color of head**
B: Black

Numerical indicators

DR30N 1 – N E R □
① ② ③④⑤⑥

① **Product category**
DR30N: 30mm-dia. numerical indicators

② **Display**
1: One-digit
2: Two-digit

③ **Input logic**
N: Negative logic
P: Positive logic

④ **Operating voltage**
B: 12V DC
E: 24V DC

⑤ **Luminous color**
R: Red
G: Green

⑥ **Terminal**
Blank: Solder
C: Solder (with connector)
R: With right angle connector

Discontinued

AR30 and DR30
Ratings and specifications

■ Standards approved

UL508	File No. E44592
CSA C22.2 No.14	File No. LR20479
TÜV: EN60947-5-1	Pushbutton, Illuminated pushbutton: R9551062 Selector, Illuminated selector: R9551060 Pilot lights: R9551061 Joy stick selector switch: R2050803 (Lever switch) Buzzer: J9950091
TÜV: EN60947-5-1 EN60947-5-5	Emergency stop pushbutton Emergency stop illuminated pushbutton : R50028146

■ Specifications (Indoor use)

Description	Pushbutton switch Illuminated pushbutton switch Emergency stop pushbutton switch Emergency stop illuminated pushbutton switch Selector switch Illuminated selector switch	Joy stick selector (Lever switch)	Pilot light	Numerical indicator
Rated insulation voltage	600V AC/DC *1	250V AC/DC	250V AC/DC *2	32V AC/DC
Mechanical durability	*See page 04/69*	250,000 operations	–	–
Electrical durability	500,000 operations at 220V AC 6A 1 million operations at 220V AC 3A	100,000 operations at 220V AC 1A (Res. load)	–	–
Operating frequency	1200 operations/hour (On-load factor: 40%)		–	–
Dielectric strength	2500V AC, 1 minute *3	2000V AC, 1 minute *4		1000V AC, 1 minute
Insulation resistance	100MΩ or more (500V DC megger)	100MΩ or more (500V DC megger)		
Rated impulse dielectric strength	6kV	–	6kV	–
Conditional short-circuit current	1000A	1000A	–	–
Short-circuit protective device	Fuse 15A	Fuse 1A	–	–
Pollution degree	3			
Vibration	Resonance: 10 to 55Hz, double amplitude 0.1mm *5 Constant: 16.7Hz, double amplitude 3mm			
Shock	Malfunction durability: 100m/s² *6 Mechanical durability: 500m/s²		Mechanical durability: 500m/s²	
Ambient temperature (No condensation or no icing)	-20 to +70°C	-5 to +70°C	-20 to +50°C	-20 to +40°C
Storage temperature	-40 to +80°C			-30 to +85°C
Humidity	45 to 85% RH (within -5 to +40°C)			
Degree of protection	IP65 *7			

Notes: *1 Illuminated type without transformer: 250V AC/DC
*2 Pilot light with transformer: 600V AC
*3 Illuminated type without transformer: 2000V AC, 1 minute
*4 Pilot light with transformer: 2500V AC, 1 minute
*5 Emergency stop type: 10 to 500Hz, double amplitude 0.7mm (acceleration 50m/s²), according to the test condition of EN60947-5-5 (1998)
*6 Emergency stop type: 150m/s²
*7 AR30Q7L and DR30D1L type: IP40

● Mechanical durability

Description		Operations
Pushbutton switch Illuminated pushbutton switch Emergency stop pusubutton switch Emergency stop illuminated pusubutton	Momentary action Alternate action With selector ring Push-lock, turn-reset Push-lock, pull-reset	5 million 1 million 100,000 100,000 30,000
Selector switch	Maintained 1, 2, 3, 4-contact Maintained 5, 6, 7, 8-contact Control type, spring return, spring/manual return	1 million 500,000 200,000
Illuminated selector switch	Maintained Without transformer 1, 2, 3-contact 4-contact With transformer 1, 2-contact 3-contact Spring return, spring/manual return	 1 million 500,000 1 million 500,000 200,000

Note: Key insertion/removal durability for selector switch key types
- Key type 10,000
- Key (Long durability) type 20,000

● Buzzers

Item	DR30B5	DR30B6	DR30B0	DR30B8
Rated insulation voltage	Without transformer: 60V AC/DC With transformer: 250V AC *1			
Sound level	90dB (0.1m) 70dB (1m)			80dB (0.1m) 60dB (1.0m)
Durability	1000h		80h	1000h
Frequency	2.4 to 3.3kHz	1.9 to 2.5kHz		2.4 to 3.3kHz
Intermittent cycle	Approx. 170-cycle/min	–	–	Approx. 170-cycle/min
Current consumption	See the table below			
Dielectric strength	Without transformer: 1000V AC 1 minute With transformer: 2000V AC 1 minute *2			
Insulation resistance	100MΩ or more (500V DC megger)			
Pollution degree	3			
Vibration	Resonance: 10 to 55Hz, double amplitude 0.1mm Constant: 16.7Hz, double amplitude 3.0mm			
Shock	Mechanical durability: 500m/s^2			
Ambient temperature	–20 to +60˚C (No condensation or no icing) (with resistor unit: –20 to +40˚C)			
Storage temperature	–30 to +70˚C			
Humidity	45 to 85%RH (within –5 to 40˚C)			
Degree of protection	IP00			IP54

Note: *1 DR30B0 (without transformer): 250V AC
*2 DR30B0 (without transformer): 2000V AC 1 minute

• Current consumption

Operational voltage	Current consumption DR30B5, DR30B8	DR30B6	DR30B0
6V AC	70mA AC	–	–
6V DC	35mA DC	25mA AC	–
24V AC	–	45mA AC	–
24V DC	–	30mA DC	–
24V AC/DC	40mA AC, 25mA DC	30mA AC, 20mA DC	–
48V AC/DC	65mA AC, 20mA DC	–	–
110V AC	30mA AC	30mA AC	30mA AC
110V DC	30mA DC	–	–
220V AC	15mA AC	15mA AC	20mA AC

■ Contact ratings

• UL/CSA standards

AC (COS ø=0.35)

Contact rated code	120V		240V		480V		600V	
	Making current	Breaking current	Making current	Breaking current	Making current	Breaking current	Making current	Breaking current
A600	60A	6.0A	30A	3.0A	15A	1.5A	12A	1.2A

DC $T_{0.95}$= 6P (Max. 300ms)

Description	Contact rated code	Making current · Breaking current		
		125V	250V	301V–600V
Illuminated pushbutton switch Pushbutton (Ring type selector switch: AR30S2R only) Emergency stop pushbutton switch Emergency stop illuminated pushbutton switch (Except the overlap contact types)	P600	1.1A	0.55A	0.2A
Overlap contact types of products shown above Pushbutton (Ring type selector switch: AR30S1R, S6R only) Selector switch (2-position only, except the overlap contact types) Illuminated selector switch (2-position only, except the overlap contact types)	Q600	0.55A	0.27A	0.1A
Pushbutton (Ring type selector switch: AR30S3R only) Selector switch (2-pos./overlap contact type, 3-, 4-, 5-pos. type) Illuminated selector switch (2-pos./overlap contact type, 3-pos. type)	R300	0.22A	0.11A	–

Note: Joy stick selector switches (Lever switches): 250V AC, 5A (Res. load) 125V DC, 0.2A 24V DC, 1A (Res. load)

• EN standard/TÜV approved

Description	Rated operational current			
	Rated thermal current	Rated operational voltage	AC15 (Ind. load)	DC13 (Ind. load)
			Rated operational current	Rated operational current
Illuminated pushbutton switch	10A	24V	6.0A	4.0A
Pushbutton (Except the selector ring type)		120V	6.0A	–
Emergency stop pushbutton switch		125V	–	1.3A
Emergency stop illuminated pushbutton switch		240V	6.0A	–
Selector switch (2-position)		250V	–	0.45A
Illuminated selector switch (2-position)		480V	2.5A	–
		600V	2.0A	–
Selector switch (3, 4, 5-position)	10A	24V	6.0A	2.0A
Illuminated selector switch (3-position)		120V	6.0A	–
Pushbutton with selector ring		125V	–	0.65A
		240V	6.0A	–
		250V	–	0.23A
		480V	2.5A	–
		600V	2.0A	–
Joy stick selector switch (Lever switch)	5A	24V	–	0.7A
		120V	0.3A	–
		125V	–	0.15A
		240V	0.3A	–

Lamp rated voltage UL/CSA standards, TÜV approved

	LED lamp	Incandescent lamp
Full-voltage (without transformer)	Max. 24V AC/DC	Max. 30V AC/DC
With transformer	Max. 550V AC (Short-body type: Max. 220V AC)	

■ **Operating characteristic** (1NO+1NC)

Description	Pushbutton Illuminated pushbutton	Emergency stop pushbutton Emergency stop illuminated pushbutton		Selector *2 Illuminated selector		
		Push-lock type	Push-pull type	Maintained	Spring/manual return	Spring return
Ave. required operating force	9N (Push-lock type: 20N)	30N *1	45N	0.15N•m	0.13N•m	0.1N•m
Operating travel	Approx. 6mm (Push-lock type: Approx. 9mm, operation angle: Approx. 45°)	Approx. 9mm (Operation angle: Approx. 45°)	Approx. 9mm	2-position: Approx. 90° 3-position: Approx. 45° 4-position: Approx. 40° 5-position: Approx. 30°	3-position: Approx. 45°	2-position: Approx. 60° 3-position: Approx. 45°
Required return force	– (Push-lock type: 0.6N•m)	0.6N•m	30N (pull)	0.15N•m	0.13N•m	–

Notes: *1 AR30V2R type: 45N
*2 4-position, 5-position: 2NO+2NC

■ **Lamp ratings**

• **Illuminated pushbuttons, illuminated selectors, pilot lights (round type)**

Transformer	Lamp voltage	LED (lamp base: BA9S/13)			Incandescent (lamp base: BA9S/13)		
		Type	Rated voltage	Consumption	Type	Rated voltage	Consumption
Without transformer	5.5V AC/DC	–	–	–	AHX135	6.3V AC/DC	0.9W
	6V AC	APX510-6□	6V AC	Green, red, orange, amber: 7mA AC Yellow: 26mA AC Blue: 16mA AC	–	–	–
	6V DC	APX510-D6□	6V DC	Green, red, orange, amber: 11mA DC Yellow: 33mA DC Blue: 22mA DC	–	–	–
	12V AC/DC	APX510-12□	12V AC/DC	14mA AC, 11mA DC	–	–	–
	15V AC/DC	APX510-15□	15V AC/DC	13mA AC, 11mA DC	AHX279	18V AC/DC	0.8W
	20V AC/DC	–	–	–	AHX144	24V AC/DC	0.9W
	24V AC/DC	APX510-24□	24V AC/DC	12mA AC, 11mA DC	AHX129	30V AC/DC	0.8W
With transformer (Standard type: AR9T511)	110V AC	APX510-6□	6V AC	1.5VA	AHX135	6.3V AC/DC	2VA
	127V AC						2VA
	220V AC						2VA
	254V AC	APX510-6□	6V AC	2.5VA	AHX135	6.3V AC/DC	2.5VA
	380V AC						2.5VA
	440V AC						2.5VA
	480V AC						2.5VA
	550V AC						2.5VA
With resistor unit (AR9T519-H)	110V DC	APX510-24□	24V AC/DC	1.2W	–	–	–

Notes: • Short body pilot lights: 110V AC, 127V AC, 220V AC only
• Replace the □ mark by the lamp luminous color code, *see page 04/73*

• **Pilot lights with resistor**

Lamp Voltage	LED (lamp base: E12/15)			Incandescent (lamp base: E12/15)		
	Type	Rated voltage	Consumption	Type	Rated voltage	Consumption
50V DC	APX507-24□ *	24V AC/DC	0.8W	AHX130	18V AC/DC	5W
110V DC			1.7W			10W
220V DC			3.3W			20W

Notes: * White: APX509-24O
• Replace the □ mark by the lamp luminous color code, *see page 04/73*

• **Pilot lights (DR30F4M, F4N, M4M types)**

Transformer	Lamp voltage	LED (lamp base: BA9S/13)			Incandescent (lamp base: BA9S/13)		
		Type*	Rated voltage	Consumption	Type	Rated voltage	Consumption
Without transformer	5.5V AC/DC	–	–	–	AHX135	6.3V AC/DC	0.9W
	6V DC	DR9Q001-6□ DR9Q002-6□ DR9Q003-6□	6V DC	Yellow, orange, amber: 120mA DC Red: 48mA DC	–	–	–
	12V AC	DR9Q001-2□ DR9Q002-2□ DR9Q003-2□	12V AC	Yellow, orange, amber: 90mA AC Red: 25mA AC	–	–	–
	12V AC/DC	DR9Q001-B□ DR9Q002-B□ DR9Q003-B□	12V AC/DC	Yellow, orange, amber: 84mA AC, 60mA DC Red: 27mA AC, 24mA DC	–	–	–
	15V AC/DC	–	–	–	AHX279	20V AC/DC	0.8W
	20V AC/DC	–	–	–	AHX144	24V AC/DC	0.9W
	24V AC/DC	DR9Q001-E□ DR9Q002-E□ DR9Q003-E□	24V AC/DC	Yellow, orange, amber: 42mA AC, 30mA DC Red: 16mA AC, 12mA DC	AHX129	30V AC/DC	0.8W
With transformer unit (LED: AR9T557) (Incandescent: AR9T511)	110V AC	DR9Q001-2□ DR9Q002-2□ DR9Q003-2□	12V AC	3VA	AHX135	6.3V AC/DC	2VA
	127V AC						2VA
	220V AC						2VA
	254V AC						2.5VA
	380V AC						2.5VA
	440V AC						2.5VA
	480V AC						2.5VA
	550V AC						2.5VA
With resistor unit (AR9T519-H)	110V DC	DR9Q001-E□ DR9Q002-E□ DR9Q003-E□	24V AC/DC	1.4W	–	–	–

Notes: * DR9Q001: For DR30M4M type
DR9Q002: For DR30F4N type
DR9Q003: For DR30F4M type
• Replace the □ mark by the lamp luminous color code, *see page 04/73*

• Numerical indicators

Operational voltage	Current consumption	
	One-digit	Two-digit
12V DC, 24V DC	100mA DC	200mA DC

■ Lamp durability

Lamp	Durability	Judgement criterion
LED	Approx. 30000h	When brightness is less than 50% of initial value
Incandescent	Approx. 5000h (AC)	When the bulb burns out

Note: The operating voltage for incandescent lamps is set at 80 to 90% of the lamp's rated voltage.

Estimated durability for LED lamps

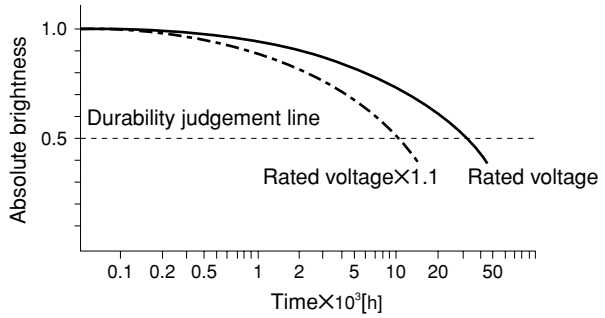

Notes: • Durability at Ta=25˚C
• Durability is affected by temperature, humidity, and voltage fluctuation.

Incandescent lamp voltage characteristics

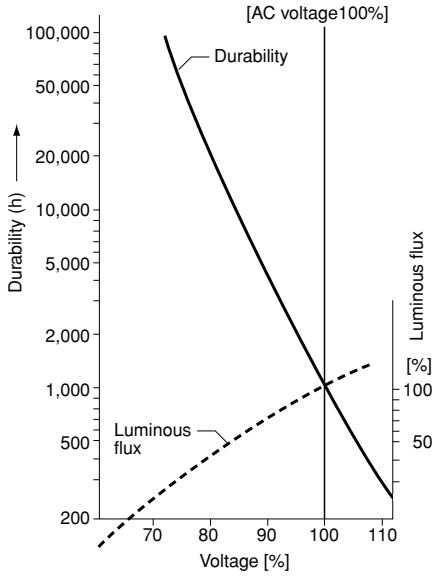

■ Combination of lens color and LED luminous color

Button color (lens or color plate)		LED lamp (high-brightness)			LED unit			
Color	Code	Luminous color	Type	Type *1	Luminous color	Type *2	Type *3	Type *4
Green	G	Green	APX510-■G	APX507-24G	Yellow	DR9Q003-■Y	DR9Q002-■Y	DR9Q001-■Y
Red	R	Red	APX510-■R	APX507-24R	Red	DR9Q003-■R	DR9Q002-■R	DR9Q001-■R
White	W	Orange	APX510-■O	APX509-24O	Orange	DR9Q003-■O	DR9Q002-■O	DR9Q001-■O
Yellow	Y	Yellow	APX510-■Y	APX507-24Y	Yellow	DR9Q003-■Y	DR9Q002-■Y	DR9Q001-■Y
Orange	A	Amber	APX510-■A	APX507-24A	Amber	DR9Q003-■A	DR9Q002-■A	DR9Q001-■A
Blue	S	Blue	APX510-■S	APX507-24S	–	–	–	–

Notes: *1 For pilot light with resistor
*2 For DR30F4M type
*3 For DR30F4N type
*4 For DR30M4M type
• Replace the ■ mark by the lamp voltage code, *see page 04/71, 04/72*

■ Illuminated pushbutton switches

Operator	Trans-former	Contact	LED lamp Momentary action Type	LED lamp Alternate action Type	Incandescent lamp Momentary action Type	Incandescent lamp Alternate action Type
Extended round head AF95-4	Without	1NO	**AR30E0L-10■3□**	**AR30E5L-10■3□**	**AR30E0L-10■4□**	**AR30E5L-10■4□**
		1NC	**AR30E0L-01■3□**	**AR30E5L-01■3□**	**AR30E0L-01■4□**	**AR30E5L-01■4□**
		1NO+1NC	**AR30E0L-11■3□**	**AR30E5L-11■3□**	**AR30E0L-11■4□**	**AR30E5L-11■4□**
		2NO+2NC	**AR30E0L-22■3□**	—	**AR30E0L-22■4□**	—
	With	1NO	**AR30E0L-10■3□**	**AR30E5L-10■3□**	**AR30E0L-10■4□**	**AR30E5L-10■4□**
		1NC	**AR30E0L-01■3□**	**AR30E5L-01■3□**	**AR30E0L-01■4□**	**AR30E5L-01■4□**
		1NO+1NC	**AR30E0L-11■3□**	**AR30E5L-11■3□**	**AR30E0L-11■4□**	**AR30E5L-11■4□**
Extended with transparent full guard (24mm dia.) KKD05-164	Without	1NO	**AR30G4L-10■3□**	**AR30G9L-10■3□**	**AR30G4L-10■4□**	**AR30G9L-10■4□**
		1NC	**AR30G4L-01■3□**	**AR30G9L-01■3□**	**AR30G4L-01■4□**	**AR30G9L-01■4□**
		1NO+1NC	**AR30G4L-11■3□**	**AR30G9L-11■3□**	**AR30G4L-11■4□**	**AR30G9L-11■4□**
		2NO+2NC	**AR30G4L-22■3□**	—	**AR30G4L-22■4□**	—
	With	1NO	**AR30G4L-10■3□**	**AR30G9L-10■3□**	**AR30G4L-10■4□**	**AR30G9L-10■4□**
		1NC	**AR30G4L-01■3□**	**AR30G9L-01■3□**	**AR30G4L-01■4□**	**AR30G9L-01■4□**
		1NO+1NC	**AR30G4L-11■3□**	**AR30G9L-11■3□**	**AR30G4L-11■4□**	**AR30G9L-11■4□**
Extended with full guard (24mm dia. with openings) AF99-328	Without	1NO	**AR30G2L-10■3□**	**AR30G7L-10■3□**	**AR30G2L-10■4□**	**AR30G7L-10■4□**
		1NC	**AR30G2L-01■3□**	**AR30G7L-01■3□**	**AR30G2L-01■4□**	**AR30G7L-01■4□**
		1NO+1NC	**AR30G2L-11■3□**	**AR30G7L-11■3□**	**AR30G2L-11■4□**	**AR30G7L-11■4□**
		2NO+2NC	**AR30G2L-22■3□**	—	**AR30G2L-22■4□**	—
	With	1NO	**AR30G2L-10■3□**	**AR30G7L-10■3□**	**AR30G2L-10■4□**	**AR30G7L-10■4□**
		1NC	**AR30G2L-01■3□**	**AR30G7L-01■3□**	**AR30G2L-01■4□**	**AR30G7L-01■4□**
		1NO+1NC	**AR30G2L-11■3□**	**AR30G7L-11■3□**	**AR30G2L-11■4□**	**AR30G7L-11■4□**
Extended with full guard (24mm dia.) AF95-6	Without	1NO	**AR30G3L-10■3□**	**AR30G8L-10■3□**	**AR30G3L-10■4□**	**AR30G8L-10■4□**
		1NC	**AR30G3L-01■3□**	**AR30G8L-01■3□**	**AR30G3L-01■4□**	**AR30G8L-01■4□**
		1NO+1NC	**AR30G3L-11■3□**	**AR30G8L-11■3□**	**AR30G3L-11■4□**	**AR30G8L-11■4□**
		2NO+2NC	**AR30G3L-22■3□**	—	**AR30G3L-22■4□**	—
	With	1NO	**AR30G3L-10■3□**	**AR30G8L-10■3□**	**AR30G3L-10■4□**	**AR30G8L-10■4□**
		1NC	**AR30G3L-01■3□**	**AR30G8L-01■3□**	**AR30G3L-01■4□**	**AR30G8L-01■4□**
		1NO+1NC	**AR30G3L-11■3□**	**AR30G8L-11■3□**	**AR30G3L-11■4□**	**AR30G8L-11■4□**
Push-lock, turn-reset (40mm dia. with white arrow) 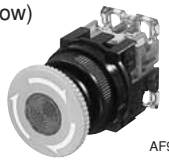 AF97-75	Without	1NO	—	**AR30V5L-10■3□**	—	**AR30V5L-10■4□**
		1NC	—	**AR30V5L-01■3□**	—	**AR30V5L-01■4□**
		1NO+1NC	—	**AR30V5L-11■3□**	—	**AR30V5L-11■4□**
		3NC	—	**AR30V5L-03■3□**	—	**AR30V5L-03■4□**
	With	1NO	—	**AR30V5L-10■3□**	—	**AR30V5L-10■4□**
		1NC	—	**AR30V5L-01■3□**	—	**AR30V5L-01■4□**
		1NO+1NC	—	**AR30V5L-11■3□**	—	**AR30V5L-11■4□**
Push-pull (35mm dia.) 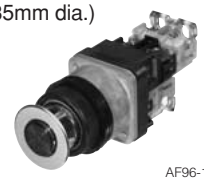 AF96-185	Without	1NO+1NC	**AR30Q7L-11■3□**	—	**AR30Q7L-11■4□**	—
	With	1NO+1NC	**AR30Q7L-11■3□**	—	**AR30Q7L-11■4□**	—

Note: ■ □ *See page 04/75*

• **Lens color**

Replace the □ mark by the lens color code

Color	Green	Red	White	Blue	Yellow	Orange
Code	G	R	W	S	Y	A

Note: AR30V5L type: Red, yellow only

• **Contact arrangements**

Contact arrangements other than above are available

Contact arrangement	1NO	1NC	1NO+1NC	2NO	2NC	3NO
Code	10	01	11	20	02	30

Contact arrangement	3NC	2NO+2NC	4NO	4NC	5NO	5NC
Code	03	22	40	04	50	05

Note: AR30Q7L type: 1NO + 1NC only

Available numbers of contact blocks

Operation	Without transformer	With transformer
Momentary action	6-contact block	4-contact block
Alternate action Push-lock, turn-reset	3-contact block	2-contact block

• **Contact operation (AR30Q7L)**

Contact block		Button position		
No.	Type	Pull	Free	Push
(1)	NC	●		
(2)	NC			

● Contact closed

• **Voltage**

Replace the ■ mark by the lamp voltage code

Transformer		Code LED	Incandescent
Without transformer	6V DC	6	—
	6V AC	A	—
	5.5V AC/DC	—	5
	12V AC/DC	B	—
	15V AC/DC	C	C
	20V AC/DC	—	D
	24V AC/DC	E	E
With transformer	100-110V AC	H	H
	115-127V AC	L	L
	200-220V AC	M	M
	230-254V AC	Q	Q
	350-380V AC	S	S
	400-440V AC	T	T
	480V AC	V	V
	500-550V AC	W	W

• **Position of contact block**

AR30Q7L (without transformer)

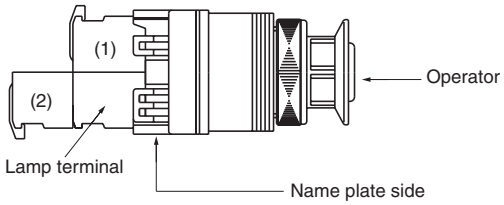

AR30Q7L (with transformer)

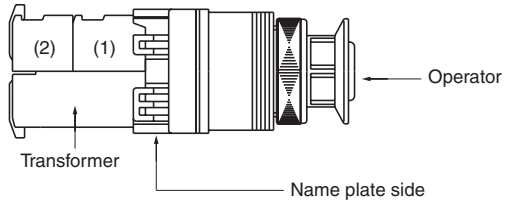

■ Pushbutton switches

Operator	Contact	Momentary action Type	Alternate action Type
Flush round head AF95-11	1NO	**AR30F0R-10□**	**AR30F5R-10□**
	1NC	**AR30F0R-01□**	**AR30F5R-01□**
	1NO+1NC	**AR30F0R-11□**	**AR30F5R-11□**
	2NO	**AR30F0R-20□**	**AR30F5R-20□**
	2NC	**AR30F0R-02□**	**AR30F5R-02□**
	2NO+2NC	**AR30F0R-22□**	**AR30F5R-22□**
Extended round head AF95-10	1NO	**AR30E0R-10□**	**AR30E5R-10□**
	1NC	**AR30E0R-01□**	**AR30E5R-01□**
	1NO+1NC	**AR30E0R-11□**	**AR30E5R-11□**
	2NO	**AR30E0R-20□**	**AR30E5R-20□**
	2NC	**AR30E0R-02□**	**AR30E5R-02□**
	2NO+2NC	**AR30E0R-22□**	**AR30E5R-22□**
Flush round head symbol mark type AF98-195	1NO	**AR30FAR-10C■**	**AR30FBR-10C■**
	1NC	**AR30FAR-01C■**	**AR30FBR-01C■**
	1NO+1NC	**AR30FAR-11C■**	**AR30FBR-11C■**
	2NO	**AR30FAR-20C■**	**AR30FBR-20C■**
	2NC	**AR30FAR-02C■**	**AR30FBR-02C■**
	2NO+2NC	**AR30FAR-22C■**	**AR30FBR-22C■**
Extended round head symbol mark type AF98-194	1NO	**AR30EAR-10C■**	**AR30EBR-10C■**
	1NC	**AR30EAR-01C■**	**AR30EBR-01C■**
	1NO+1NC	**AR30EAR-11C■**	**AR30EBR-11C■**
	2NO	**AR30EAR-20C■**	**AR30EBR-20C■**
	2NC	**AR30EAR-02C■**	**AR30EBR-02C■**
	2NO+2NC	**AR30EAR-22C■**	**AR30EBR-22C■**
Mushroom head (40mm dia.) AF95-12	1NO	**AR30M0R-10□**	**AR30M5R-10□**
	1NC	**AR30M0R-01□**	**AR30M5R-01□**
	1NO+1NC	**AR30M0R-11□**	**AR30M5R-11□**
	2NO	**AR30M0R-20□**	**AR30M5R-20□**
	2NC	**AR30M0R-02□**	**AR30M5R-02□**
	2NO+2NC	**AR30M0R-22□**	**AR30M5R-22□**
Mushroom head (29mm dia.) AF95-8	1NO	**AR30M4R-10□**	—
	1NC	**AR30M4R-01□**	—
	1NO+1NC	**AR30M4R-11□**	—
	2NO	**AR30M4R-20□**	—
	2NC	**AR30M4R-02□**	—
	2NO+2NC	**AR30M4R-22□**	—
Extended with full guard (24mm dia.) AF95-16	1NO	**AR30G1R-10□**	**AR30G6R-10□**
	1NC	**AR30G1R-01□**	**AR30G6R-01□**
	1NO+1NC	**AR30G1R-11□**	**AR30G6R-11□**
	2NO	**AR30G1R-20□**	**AR30G6R-20□**
	2NC	**AR30G1R-02□**	**AR30G6R-02□**
	2NO+2NC	**AR30G1R-22□**	**AR30G8R-22□**

Operator	Contact	Momentary action Type	Alternate action Type
Extended with half guard AF95-9	1NO	**AR30G0R-10□**	**AR30G5R-10□**
	1NC	**AR30G0R-01□**	**AR30G5R-01□**
	1NO+1NC	**AR30G0R-11□**	**AR30G5R-11□**
	2NO	**AR30G0R-20□**	**AR30G5R-20□**
	2NC	**AR30G0R-02□**	**AR30G5R-02□**
	2NO+2NC	**AR30G0R-22□**	**AR30G5R-22□**
Pin lock AF96-240	1NO	**AR30GPR-10□**	—
	1NC	**AR30GPR-01□**	—
	1NO+1NC	**AR30GPR-11□**	—
	2NO	**AR30GPR-20□**	—
	2NC	**AR30GPR-02□**	—
	2NO+2NC	**AR30GPR-22□**	—
Mushroom head with full guard (40mm dia.) AF95-17	1NO	**AR30M3R-10□**	**AR30M8R-10□**
	1NC	**AR30M3R-01□**	**AR30M8R-01□**
	1NO+1NC	**AR30M3R-11□**	**AR30M8R-11□**
	2NO	**AR30M3R-20□**	**AR30M8R-20□**
	2NC	**AR30M3R-02□**	**AR30M8R-02□**
	2NO+2NC	**AR30M3R-22□**	**AR30M8R-22□**
Mushroom head with full guard (35mm dia. metal nut) AF96-239	1NO	**AR30GSR-10□**	—
	1NC	**AR30GSR-01□**	—
	1NO+1NC	**AR30GSR-11□**	—
	2NO	**AR30GSR-20□**	—
	2NC	**AR30GSR-02□**	—
	2NO+2NC	**AR30GSR-22□**	—
Giant head AF95-579	1NO	**AR30B0R-10□**	—
	1NC	**AR30B0R-01□**	—
	1NO+1NC	**AR30B0R-11□**	—
	2NO	**AR30B0R-20□**	—
	2NC	**AR30B0R-02□**	—
	2NO+2NC	**AR30B0R-22□**	—
Giant head with guard AF95-582	1NO	**AR30B1R-10□**	—
	1NC	**AR30B1R-01□**	—
	1NO+1NC	**AR30B1R-11□**	—
	2NO	**AR30B1R-20□**	—
	2NC	**AR30B1R-02□**	—
	2NO+2NC	**AR30B1R-22□**	—
Giant head with full guard AF95-580	1NO	**AR30B2R-10□**	—
	1NC	**AR30B2R-01□**	—
	1NO+1NC	**AR30B2R-11□**	—
	2NO	**AR30B2R-20□**	—
	2NC	**AR30B2R-02□**	—
	2NO+2NC	**AR30B2R-22□**	—

Note: ■ □ *See page 04/77*

Operator	Contact	Momentary action Type	Alternate action Type
Giant head with full guard AF95-581	1NO	**AR30B3R-10**□	—
	1NC	**AR30B3R-01**□	—
	1NO+1NC	**AR30B3R-11**□	—
	2NO	**AR30B3R-20**□	—
	2NC	**AR30B3R-02**□	—
	2NO+2NC	**AR30B3R-22**□	—
Push, turn-lock AF95-583	1NO	**AR30N0R-10**□	—
	1NC	**AR30N0R-01**□	—
	1NO+1NC	**AR30N0R-11**□	—
	2NO	**AR30N0R-20**□	—
	2NC	**AR30N0R-02**□	—
	2NO+2NC	**AR30N0R-22**□	—

Operator	Contact	Momentary action Type	Alternate action Type
Push-lock, turn-reset (40mm dia. with white arrow) AF97-69	1NO	—	**AR30V5R-10**□
	1NC	—	**AR30V5R-01**□
	1NO+1NC	—	**AR30V5R-11**□
	2NO	—	**AR30V5R-20**□
	2NC	—	**AR30V5R-02**□
	2NO+2NC	—	**AR30V5R-22**□
Pushbutton with emergency operating cap AF96-187	1NO	**AR30FVR-10** □	—
	1NC	**AR30FVR-01** □	—
	1NO+1NC	**AR30FVR-11** □	—
	2NO	**AR30FVR-20** □	—
	2NC	**AR30FVR-02** □	—
	2NO+2NC	**AR30FVR-22** □	—

- **Button color**

Replace the □ mark by the button color code

Color	Green	Red	White	Blue	Yellow	Orange	Black
Code	G	R	W	S	Y	A	B

Note: AR30V5R type: Red, yellow, black only

- **Available numbers of contact blocks**

Momentary action	Alternate action Push-lock, turn-reset
8-contact block	4-contact block

- **Contact arrangements**

Contact arrangements other than above are available

Contact arrangement	1NO	1NC	1NO+1NC	2NO	2NC	3NO	3NC
Code	10	01	11	20	02	30	03

Contact arrangement	2NO+2NC	4NO	4NC	5NO	5NC	3NO+3NC	4NO+4NC
Code	22	40	04	50	05	33	44

- **Symbol mark** (For AR30FAR, FBR, EAR, EBR)

Replace the ■ mark by the symbol mark code

Symbol mark	◯		I		Ⓣ		◯	I	Ⓣ
Color of button	White	Black	White	Black	White	Black	Clear		
Color of mark	Red		Green		Green		Black		
Code	01	02	03	04	11	12	02B	04B	12B

Operator	Contact (The following contact is only available.)	Button color	Type	Contact operation					
				Contact block		Left		Right	
				Mounting position	Type	Free	Depressed	Free	Depressed
Pushbutton with selector ring (2-position) AF97-506	2NO+2NC	Green	**AR30S1R-22G**	(1)	NC	—	—	●	—
		Red	**AR30S1R-22R**						
		Black	**AR30S1R-22B**	(2)	NC	—	—	●	—
		White	**AR30S1R-22W**						
		Yellow	**AR30S1R-22Y**	(3)	NO	—	●	—	●
		Orange	**AR30S1R-22A**						
		Blue	**AR30S1R-22S**	(4)	NO	—	●	—	●
	2NO	Green	**AR30S2R-20G**	(1)	NO	—	●	—	—
		Red	**AR30S2R-20R**						
		Black	**AR30S2R-20B**	(2)	NO	—	—	—	●
		White	**AR30S2R-20W**						
		Yellow	**AR30S2R-20Y**						
		Orange	**AR30S2R-20A**						
		Blue	**AR30S2R-20S**						
	2NO+2NC	Green	**AR30S2R-22G**	(1)	NC	●	—	▬	
		Red	**AR30S2R-22R**						
		Black	**AR30S2R-22B**	(2)	NC	▬		●	—
		White	**AR30S2R-22W**						
		Yellow	**AR30S2R-22Y**	(3)	NO	—	●	—	—
		Orange	**AR30S2R-22A**						
		Blue	**AR30S2R-22S**	(4)	NO	—	—	—	●
	2NO+2NC	Green	**AR30S3R-22G**	(1)	NC	—	—	▬	
		Red	**AR30S3R-22R**						
		Black	**AR30S3R-22B**	(2)	NC	▬		—	—
		White	**AR30S3R-22W**						
		Yellow	**AR30S3R-22Y**	(3)	NO	—	●	—	—
		Orange	**AR30S3R-22A**						
		Blue	**AR30S3R-22S**	(4)	NO	—	—	—	●
	2NO+2NC	Green	**AR30S6R-22G**	(1)	NC	●	—	—	Locked
		Red	**AR30S6R-22R**						
		Black	**AR30S6R-22B**	(2)	NC	●	—	—	
		White	**AR30S6R-22W**						
		Yellow	**AR30S6R-22Y**	(3)	NO	—	●	●	
		Orange	**AR30S6R-22A**						
		Blue	**AR30S6R-22S**	(4)	NO	—	●	●	

Note: (1) to (4): Contact block mounting position

● Contact closed
— Contact open

- **Position of contact block**

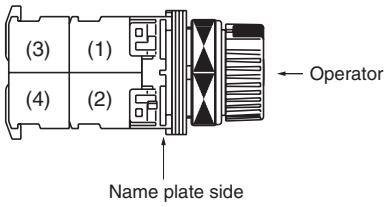

■ Emergency stop pushbutton switches

⊖ (Direct opening action), conform to EN418

Operator	Contact	Type
Push-lock, turn-reset (Soft-touch 40mm dia. with white arrow) AF97-69	1NC 1NO+1NC 2NC 2NO+2NC	**AR30V0R-01R** **AR30V0R-11R** **AR30V0R-02R** **AR30V0R-22R**
Push-lock, turn-reset (40mm dia.) AF95-176	1NC 1NO+1NC 2NC 2NO+2NC	**AR30V2R-01R** **AR30V2R-11R** **AR30V2R-02R** **AR30V2R-22R**
Push-lock, turn-reset (Soft-touch 65mm dia. with white arrow) AF97-68	1NC 1NO+1NC 2NC 2NO+2NC	**AR30V1R-01R** **AR30V1R-11R** **AR30V1R-02R** **AR30V1R-22R**
Push-lock, pull-reset (35mm dia.) AF95-3	1NC 1NO+1NC 2NC	**AR30Q2R-01R** **AR30Q2R-11R** **AR30Q2R-02R**

Note: Button color: Red only

• Contact arrangements

Contact arrangements other than above are available

Contact arrangement	1NO	1NO+1NC	2NC	3NC	2NO+2NC	4NC
Code	01	11	02	03	22	04

Notes: • Except AR30Q2R
• For push-lock, pull-reset type, up to 2-contact block.

■ Emergency stop illuminated pushbutton switches

⊖ (Direct opening action), conform to EN418

Operator	Transformer	Contact	LED lamp Type	Incandescent lamp Type
Push-lock, turn-reset (Soft-touch 40mm dia. with white arrow) AF97-75	Without	1NC	**AR30V0L-01■3R**	**AR30V0L-01■4R**
		1NO+1NC	**AR30V0L-11■3R**	**AR30V0L-11■4R**
		2NC	**AR30V0L-02■3R**	**AR30V0L-02■4R**
		3NC	**AR30V0L-03■3R**	**AR30V0L-03■4R**
	With	1NC	**AR30V0L-01■3R**	**AR30V0L-01■4R**
		1NO+1NC	**AR30V0L-11■3R**	**AR30V0L-11■4R**
		2NC	**AR30V0L-02■3R**	**AR30V0L-02■4R**
Push-lock, turn-reset (40mm dia.) AF95-2	Without	1NC	**AR30V2L-01■3R**	**AR30V2L-01■4R**
		1NO+1NC	**AR30V2L-11■3R**	**AR30V2L-11■4R**
		2NC	**AR30V2L-02■3R**	**AR30V2L-02■4R**
		3NC	**AR30V2L-03■3R**	**AR30V2L-03■4R**
	With	1NC	**AR30V2L-01■3R**	**AR30V2L-01■4R**
		1NO+1NC	**AR30V2L-11■3R**	**AR30V2L-11■4R**
		2NC	**AR30V2L-02■3R**	**AR30V2L-02■4R**

Notes: • Button color: Red only
• Contact arrangements indicated in the table can be supplied.

• Voltage

Replace the ■ mark by the lamp voltage code

Transformer		Code LED	Incandescent
Without	6V DC	6	—
	6V AC	A	—
	5V AC/DC	—	5
	12V AC/DC	B	—
	15V AC/DC	C	C
	20V AC/DC	—	D
	24V AC/DC	E	E

Transformer		Code LED	Incandescent
With	100-110V AC	H	H
	115-127V AC	L	L
	200-220V AC	M	M
	230-254V AC	Q	Q
	350-380V AC	S	S
	400-440V AC	T	T
	480V AC	V	V
	500-550V AC	W	W

■ Selector switches
2-position

Operator	Operation	Knob color or key removable position	Contact	Type Switch with round bezel	Contact operation (Example)	
					Contact arrangement	Operator position (Left / Right)
Knob AF95-13	Maintained each 90°	Color code: B: Black (Standard) Color other than above are available (G: Green R: Red)	1NO 1NC 1NO+1NC 2NO 2NC 2NO+2NC	**AR30PR-210B** **AR30PR-201B** **AR30PR-211B** **AR30PR-220B** **AR30PR-202B** **AR30PR-222B**	1NO (1)	Upper contact ③ ④
	Spring return 60°		1NO 1NC 1NO+1NC 2NO 2NC 2NO+2NC	**AR30PR-010B** **AR30PR-001B** **AR30PR-011B** **AR30PR-020B** **AR30PR-002B** **AR30PR-022B**	1NC (1)	Upper contact ① ②
Lever AF95-14	Maintained each 90°		1NO 1NC 1NO+1NC 2NO 2NC 2NO+2NC	**AR30WR-210B** **AR30WR-201B** **AR30WR-211B** **AR30WR-220B** **AR30WR-202B** **AR30WR-222B**	1NO+1NC (1) (2)	Upper contact ③ ④ Lower contact ① ②
	Spring return 60°		1NO 1NC 1NO+1NC 2NO 2NC 2NO+2NC	**AR30WR-010B** **AR30WR-001B** **AR30WR-011B** **AR30WR-020B** **AR30WR-002B** **AR30WR-022B**	2NO+2NC (1) (3) (2) (4)	Upper contact ③ ④ ③ ④ Lower contact ① ② ① ②
Key AF95-15	Maintained each 90°	■: Key removable position ( ): Key type *See page 04/83*	1NO 1NC 1NO+1NC 2NO 2NC 2NO+2NC	**AR30J□R-2■10( )** **AR30J□R-2■01( )** **AR30J□R-2■11( )** **AR30J□R-2■20( )** **AR30J□R-2■02( )** **AR30J□R-2■22( )**		
	Spring return 60°		1NO 1NC 1NO+1NC 2NO 2NC 2NO+2NC	**AR30J□R-0A10( )** **AR30J□R-0A01( )** **AR30J□R-0A11( )** **AR30J□R-0A20( )** **AR30J□R-0A02( )** **AR30J□R-0A22( )**		

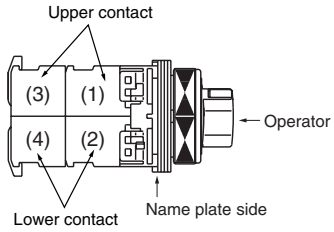

Notes: • (1) to (4): Contact block mounting position
• ① – ②, ③ – ④: Contact block terminal No.
• Contact arrangements: *See page 04/83*

● Contact closed

• Operator
Replace the □ mark by the cylinder key type code
Standard type: Blank
Long durability type: A

3-position

Operator	Operation	Knob color	Contact	Type Switch with round bezel	Contact operation (Example) Contact arrangement	Operation position L C R	Operation position L C R
Knob AF95-13	Maintained each 45˚	Color code: B: Black (Standard) Color other than above are available (G: Green R: Red)	1NO+1NC 2NO 2NC 2NO+2NC	**AR30PR-311B** **AR30PR-320B** **AR30PR-302B** **AR30PR-322B**	1NO+1NC (1) (2)	Upper contact ③ ④	Lower contact ① ②
	Spring/manual return each 45˚		1NO+1NC 2NO 2NC 2NO+2NC	**AR30PR-611B** **AR30PR-620B** **AR30PR-602B** **AR30PR-622B**			
	Spring/manual return each 45˚		1NO+1NC 2NO 2NC 2NO+2NC	**AR30PR-711B** **AR30PR-720B** **AR30PR-702B** **AR30PR-722B**	1NO+1NC (1) (2)	Upper contact ③ ④	Lower contact ① ②
	Spring return each 45˚		2NO+2NC	**AR30PR-122B**	2NO+2NC (1) (2) (3) (4)	Upper contact ① ② ③ ④	Lower contact ① ② ③ ④
Lever AF95-14	Maintained each 45˚		1NO+1NC 2NO 2NC 2NO+2NC	**AR30WR-311B** **AR30WR-320B** **AR30WR-302B** **AR30WR-322B**	1NO+1NC (1) (2)	Upper contact ③ ④	Lower contact ① ②
	Spring/manual return each 45˚		1NO+1NC 2NO 2NC 2NO+2NC	**AR30WR-611B** **AR30WR-620B** **AR30WR-602B** **AR30WR-622B**			
	Spring/manual return each 45˚		1NO+1NC 2NO 2NC 2NO+2NC	**AR30WR-711B** **AR30WR-720B** **AR30WR-702B** **AR30WR-722B**	1NO+1NC (1) (2)	Upper contact ③ ④	Lower contact ① ②
	Spring return each 45˚		2NO+2NC	**AR30WR-122B**	2NO+2NC (1) (2) (3) (4)	Upper contact ① ② ③ ④	Lower contact ① ② ③ ④

Note: • Contact arrangements: *See page 04/83*

● Contact closed

Operator	Operation	Key removable position	Contact	Type Switch with round bezel	Contact operation (Example)		
					Contact arrangement	Operator position L C R	Operator position L C R
Key AF95-15	Maintained each 45°	■: Key removable position ( ): Key type	1NO+1NC 2NO 2NC 2NO+2NC	**AR30J□R-3■11( )** **AR30J□R-3■20( )** **AR30J□R-3■02( )** **AR30J□R-3■22( )**	1NO+1NC (1) (2)	Upper contact ③ ④	Lower contact ① ②
	Spring/manual return each 45°		1NO+1NC 2NO 2NC 2NO+2NC	**AR30J□R-6■11( )** **AR30J□R-6■20( )** **AR30J□R-6■02( )** **AR30J□R-6■22( )**			
	Spring/manual return each 45°		1NO+1NC 2NO 2NC 2NO+2NC	**AR30J□R-7■11( )** **AR30J□R-7■20( )** **AR30J□R-7■02( )** **AR30J□R-7■22( )**	1NO+1NC (1) (2)	Upper contact ③ ④	Lower contact ① ②
	Spring return each 45°		2NO+2NC	**AR30J□R-1E22( )**	2NO+2NC (1) (2)	Upper contact ① ②	Lower contact ① ②
					(3) (4)	③ ④	③ ④

Notes: • Operator position L: Left, C: Center, R: Right
• (1) to (4): Contact block mounting position
• ① – ②, ③ – ④: Contact block terminal No.

● Contact closed

• Contact arrangements

Contact arrangements other than above are available

Contact arrangement	1NO	1NC	1NO+1NC	2NO	2NC	3NO	3NC
Code	10	01	11	20	02	30	03

Contact arrangement	2NO+2NC	4NO	4NC	5NO	5NC	3NO+3NC	4NO+4NC
Code	22	40	04	50	05	33	44

• Available numbers of contact blocks

Mainted	Spring return Spring/manual return
8-contact block	4-contact block

• Key removable positions

Code	A	B	C	D	E	F	G
Removable position	45° 45°	45° 45°	45° 45°	45° 45°	45° 45°	45° 45°	45° 45°
AR30J□R-2	●	●	–	●	–	–	–
AR30J□R-0	●	–	–	–	–	–	–
AR30J□R-3	●	●	●	●	●	●	●
AR30J□R-6	–	–	–	●	●	●	–
AR30J□R-7	●	–	–	–	●	–	●
AR30J□R-1	–	–	–	–	●	–	–

●: Available –: Not available

• Position of contact block

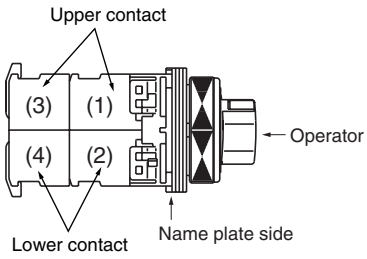

• Key code No.

Replace the ( ) mark with one of the following key code.
A, B, C, D, E and F
Standard key code is A.

• Operator

Replace the □ mark by the cylinder key type code
Standard type: Blank
Long durability type: A

■ Selector switches (control type)
3-position

Operator	Operation	Knob color or key removable position	Contact arrangement	Type Switch with round bezel
Knob AF95-475	Maintained each 45˚	Color code: B: Black (Standard) Color other than above are available (G: Green R: Red)	Replace the ■ mark by the contact arrangement code (shown on next page).	**AR30PCR-3■B**
	Spring/manual return each 45˚			**AR30PCR-6■B**
	Spring/manual return each 45˚			**AR30PCR-7■B**
	Spring return each 45˚			**AR30PCR-1■B**
Lever KK02-140A	Maintained each 45˚		Replace the ■ mark by the contact arrangement code (shown on next page).	**AR30WCR-3■B**
	Spring/manual return each 45˚			**AR30WCR-6■B**
	Spring/manual return each 45˚			**AR30WCR-7■B**
	Spring return each 45˚			**AR30WCR-1■B**
Key AF95-474	Maintained each 45˚	Replace the □ mark by the key removable position code: A, B, C, D, E F or G	Replace the ■ mark by the contact arrangement code (shown on next page).	**AR30JCR-3□■( )**
	Spring/manual return each 45˚			**AR30JCR-6□■( )**
	Spring/manual return each 45˚			**AR30JCR-7□■( )**
	Spring return each 45˚			**AR30JCR-1E■( )**

- **Key removable positions**

Code	A	B	C	D	E	F	G
Removable position							
AR30JCR-3	●	●	●	●	●	●	●
AR30JCR-6	–	–	–	●	●	●	–
AR30JCR-7	●	–	–	–	●	–	●
AR30JCR-1	–	–	–	–	●	–	–

●: Available –: Not available

- **Key code No.**
  Replace the ( ) mark with one of the following key code.
  A, B, C, D, E and F
  Standard key code is A.

- **Contact arrangement code (Typical example)**

Contact arrangement	Contact arrangement code	Contact operation: Contact block: Mounting position	Contact block: Type	Operator position: Left	Operator position: Center	Operator position: Right
2NC	01F	(1)	NC	▬	▬	
		(2)	NC		▬	▬
		–	–	–	–	–
		–	–	–	–	–
2NO+2NC	014	(1)	NC	▬	▬	
		(2)	NC		▬	▬
		(3)	NO			●
		(4)	NO	●		
4NC	01J	(1)	NC	▬	▬	
		(2)	NC		▬	▬
		(3)	NC	▬	▬	
		(4)	NC		▬	▬
2NO+2NC	024	(1)	NC	▬	▬	
		(2)	NC		●	
		(3)	NO			●
		(4)	NO	●		●
2NO+2NC	03C* (Maintained only)	(1)	NC	▬	▬	
		(2)	NC			●
		(3)	NO			●
		(4)	NO	●		
2NO+2NC	044*	(1)	NC	▬	▬	
		(2)	NC		●	
		(3)	NO			●
		(4)	NO	●		
2NO+2NC	054	(1)	NC	▬	▬	
		(2)	NC		●	
		(3)	NO			●
		(4)	NO			●

Contact arrangement	Contact arrangement code	Contact operation: Contact block: Mounting position	Contact block: Type	Operator position: Left	Operator position: Center	Operator position: Right
2NO+2NC	064	(1)	NC		▬	▬
		(2)	NC		●	
		(3)	NO	●		
		(4)	NO	●		●
1NO+1NC	07F	(1)	NC		▬	▬
		(2)	NO			●
		–	–	–	–	–
		–	–	–	–	–
2NO+2NC	07C* (Maintained only)	(1)	NC		▬	▬
		(2)	NC			●
		(3)	NO	●		
		(4)	NO	●		
2NO+2NC	084	(1)	NC		▬	▬
		(2)	NC		●	
		(3)	NO	●		
		(4)	NO	●		
2NO+2NC	094*	(1)	NC		▬	▬
		(2)	NC		●	
		(3)	NO	●		
		(4)	NO			●
2NO+2NC	104	(1)	NC		●	
		(2)	NC		●	
		(3)	NO	●		●
		(4)	NO	●		●
2NO+2NC	11C* (Maintained only)	(1)	NC		●	
		(2)	NC			●
		(3)	NO	●		●
		(4)	NO	●		

Notes: ●: Contact closed Blank: Contact open
* There may be some overlap in the contact when switching between notches.

- **Position of contact block**

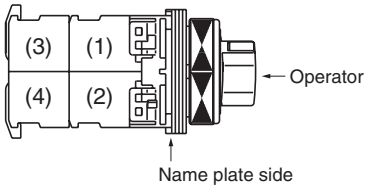

- **Contact arrangement code (Typical example)**

Contact arrangement	Contact arrangement code	Contact operation				
		Contact block		Operator position		
		Mounting position	Type	Left	Center	Right
2NO+2NC	124*	(1)	NC		●	
		(2)	NC		●	
		(3)	NO	●		●
		(4)	NO	●		
2NO+2NC	134*	(1)	NC		●	
		(2)	NC		●	
		(3)	NO	●		●
		(4)	NO			●
3NO+1NC	14D* (Maintained only)	(1)	NO	●		
		(2)	NC		●	
		(3)	NO	●		
		(4)	NO			●
3NO+1NC	15A*	(1)	NO			●
		(2)	NC		●	
		(3)	NO			●
		(4)	NO	●		
2NO+2NC	164	(1)	NC		●	
		(2)	NC		●	
		(3)	NO	●		
		(4)	NO	●		
2NO+2NC	174*	(1)	NC		●	
		(2)	NC		●	
		(3)	NO	●		
		(4)	NO			●
2NO+2NC	184	(1)	NC		●	
		(2)	NC		●	
		(3)	NO			●
		(4)	NO			●

Contact arrangement	Contact arrangement code	Contact operation				
		Contact block		Operator position		
		Mounting position	Type	Left	Center	Right
2NO+2NC	194	(1)	NC		▬	▬
		(2)	NC	▬	▬	
		(3)	NO	●		
		(4)	NO			●
4NO	20B	(1)	NO			●
		(2)	NO	●		
		(3)	NO			●
		(4)	NO	●		

Notes: ●: Contact closed Blank: Contact open
* There may be some overlap in the contact when switching between notches.

- **Position of contact block**

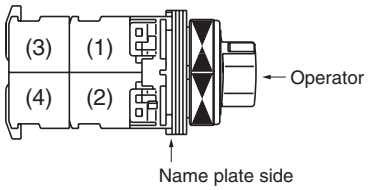

4, 5-position

Operator	Contact (The following contact is only available.)	Operation	Knob color	Contact arrangement	Type Switch with round bezel
Knob AF95-475	2NO+2NC	4-position maintained	Color code: B: Black (Standard) Color other than above are available (G: Green R: Red)	Replace the ■ mark by the contact arrangement code (shown below)	**AR30PCR-4■B**
		5-position maintained			**AR30PCR-5■B**
Lever KK02-140A	2NO+2NC	4-position maintained			**AR30WCR-4■B**
		5-position maintained			**AR30WCR-5■B**

● Contact arrangement code

Position	Contact arrangement	Contact arrangement code	Contact operation: Contact block: Mounting position	Contact block: Type	Operator position 1	2	3	4	5
4-position	2NO+2NC	41C* (Maintained only)	(1)	NC			●		
			(2)	NC	●				
			(3)	NO		●			
			(4)	NO				●	
5-position	2NO+2NC	51C* (Maintained only)	(1)	NC				●	
			(2)	NC		●			
			(3)	NO	●				
			(4)	NO					●

Notes: ●: Contact closed
* There may be some overlap in the contact when switching between notches.

• Position of contact block

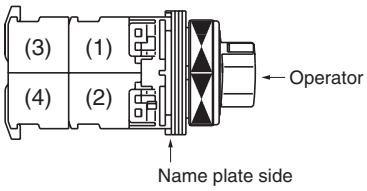

Operator position

4-position **5-position**

■ Illuminated selector switches

2-position

Operator	Operation	Contact	LED lamp		Incandescent lamp	
			Transformer	Type	Transformer	Type
Knob	Maintained	1NO 1NC 1NO+1NC 2NO+2NC	Without	**AR30PL-210■3□** **AR30PL-201■3□** **AR30PL-211■3□** **AR30PL-222■3□**	Without	**AR30PL-210■4□** **AR30PL-201■4□** **AR30PL-211■4□** **AR30PL-222■4□**
	each 90°	1NO 1NC 1NO+1NC 2NO	With	**AR30PL-210■3□** **AR30PL-201■3□** **AR30PL-211■3□** **AR30PL-220■3□**	With	**AR30PL-210■4□** **AR30PL-201■4□** **AR30PL-211■4□** **AR30PL-220■4□**
	Spring return	1NO 1NC 1NO+1NC 2NO	Without	**AR30PL-010■3□** **AR30PL-001■3□** **AR30PL-011■3□** **AR30PL-020■3□**	Without	**AR30PL-010■4□** **AR30PL-001■4□** **AR30PL-011■4□** **AR30PL-020■4□**
AF95-5	60°	1NO 1NC 1NO+1NC 2NO	With	**AR30PL-010■3□** **AR30PL-001■3□** **AR30PL-011■3□** **AR30PL-020■3□**	With	**AR30PL-010■4□** **AR30PL-001■4□** **AR30PL-011■4□** **AR30PL-020■4□**

3-position

Operator	Operation		Contact	LED lamp		Incandescent lamp	
				Transformer	Type	Transformer	Type
Knob	Maintained		1NO+1NC 2NO+2NC	Without	**AR30PL-311■3□** **AR30PL-322■3□**	Without	**AR30PL-311■4□** **AR30PL-322■4□**
	each 45˚		1NO+1NC	With	**AR30PL-311■3□**	With	**AR30PL-311■4□**
	Spring/manual return		1NO+1NC 1NO+1NC	Without With	**AR30PL-611■3□** **AR30PL-611■3□**	Without With	**AR30PL-611■4□** **AR30PL-611■4□**
AF95-5	each 45˚		1NO+1NC 1NO+1NC	Without With	**AR30PL-711■3□** **AR30PL-711■3□**	Without With	**AR30PL-711■4□** **AR30PL-711■4□**

Note: □, ■ *See page 04/89*

- Replace the ■ mark by the following lamp voltage code

Transformer	Voltage	Code LED	Incandescent
Without	5V AC/DC	–	5
	6V DC	6	–
	6V AC	A	–
	12V AC/DC	B	–
	15V AC/DC	C	C
	20V AC/DC	–	D
	24V AC/DC	E	E
With	100-110V AC	H	H
	115-127V AC	L	L
	200-220V AC	M	M
	230-254V AC	Q	Q
	350-380V AC	S	S
	400-440V AC	T	T
	480V AC	V	V
	500-550V AC	W	W

- Replace the □ mark by the following knob color code

Color	Green	Red	White	Blue	Yellow	Orange
Code	G	R	W	S	Y	A

- Up to 4-contact of contact arrangement can be made. Available numbers of contacts are as follow.

No. of position	Operation	Without transformer	With transformer
2-position	Maintained	6-contact	4-contact
	Spring return	3-contact	2-contact
3-position	Maintained	6-contact	4-contact
	Spring/manual return	3-contact	2-contact

04

● Contact arrangement and operator position

2-position

Transformer	Contact arrangement	Contact block		Operator position	
		Mounting position	Type	Left	Right
With/without	1NO	(1)	NO	–	●
With/without	1NC	(1)	NC	●	–
Without	1NO+1NC	(1)	NO	–	●
		(2)	NC	●	–
With	1NO+1NC	(1)	NC	●	–
		(2)	NO	–	●
With/without	2NO	(1)	NO	–	●
		(2)	NO	–	●
Without	2NO+2NC	(1)	NO	–	●
	*1	(2)	NC	●	–
		(3)	NO	–	●
		(4)	NC	●	–
With	2NO+2NC	(1)	NC	●	–
	*1	(2)	NC	●	–
		(3)	NO	–	●
		(4)	NO	–	●

Notes: *1 : AR30PL-2
● : Contact closed, – : Contact open

3-position

Transformer	Contact arrangement	Contact block		Operator position		
		Mounting position	Type	Left	Center	Right
Without	1NO+1NC	(1)	NO	●	–	–
	*1	(2)	NC	–	–	●
	1NO+1NC	(1)	NO	–	–	●
	*2	(2)	NC	●	–	–
	2NO+2NC	(1)	NO	●	–	–
	*3	(2)	NC	–	–	●
		(3)	NO	●	–	–
		(4)	NC	–	–	●
With	1NO+1NC	(1)	NC	–	–	●
	*1	(2)	NO	●	–	–
	1NO+1NC	(1)	NC	●	–	–
	*2	(2)	NO	–	–	●
	2NO+2NC	(1)	NC	–	–	●
	*3	(2)	NC	–	–	●
		(3)	NO	●	–	–
		(4)	NO	●	–	–

Notes: *1 : AR30PL-3, 6 *3 : AR30PL-3
*2 : AR30PL-7
● : Contact closed, – : Contact open

● Position of contact block

Without transformer

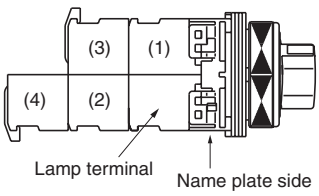

With transformer

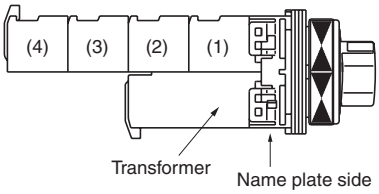

■ Pilot lights/standard

Lens	Transformer	LED lamp Lamp voltage	Type	Incandescent lamp Lamp voltage	Type
Dome AF95-18	Without	6V AC	**DR30D0L-A3□**	5.5V AC/DC	**DR30D0L-54□**
		6V DC	**DR30D0L-63□**	—	**—**
		12V AC/DC	**DR30D0L-B3□**	15V AC/DC	**DR30D0L-C4□**
		24V AC/DC	**DR30D0L-E3□**	24V AC/DC	**DR30D0L-E4□**
	With	100–110V AC	**DR30D0L-H3□**	100–110V AC	**DR30D0L-H4□**
		200–220V AC	**DR30D0L-M3□**	200–220V AC	**DR30D0L-M4□**
Dome AF97-674	With resistor	50V DC	**DR30D0L-FR□**	50V DC	**DR30D0L-FQ□**
		110V DC	**DR30D0L-HR□**	—	**—**
		220V DC	**DR30D0L-MR□**	—	**—**
Dome AF97-672	With resistor	—	**—**	110V DC	**DR30D0L-HQ□**
		—	**—**	220V DC	**DR30D0L-MQ□**
Extended round AF95-20	Without	6V AC	**DR30E3L-A3□**	5.5V AC/DC	**DR30E3L-54□**
		6V DC	**DR30E3L-63□**	—	**—**
		12V AC/DC	**DR30E3L-B3□**	15V AC/DC	**DR30E3L-C4□**
		24V AC/DC	**DR30E3L-E3□**	24V AC/DC	**DR30E3L-E4□**
	With	100–110V AC	**DR30E3L-H3□**	100–110V AC	**DR30E3L-H4□**
		200–220V AC	**DR30E3L-M3□**	200–220V AC	**DR30E3L-M4□**
Faceted AF95-19	Without	6V AC	**DR30K0L-A3□**	5.5V AC/DC	**DR30K0L-54□**
		6V DC	**DR30K0L-63□**	—	**—**
		12V AC/DC	**DR30K0L-B3□**	15V AC/DC	**DR30K0L-C4□**
		24V AC/DC	**DR30K0L-E3□**	24V AC/DC	**DR30K0L-E4□**
	With	100–110V AC	**DR30K0L-H3□**	100–110V AC	**DR30K0L-H4□**
		200–220V AC	**DR30K0L-M3□**	200–220V AC	**DR30K0L-M4□**
Faceted AF97-673	With resistor	50V DC	**DR30K0L-FR□**	50V DC	**DR30K0L-FQ□**
		110V DC	**DR30K0L-HR□**	—	**—**
		220V DC	**DR30K0L-MR□**	—	**—**
Faceted AF97-671	With resistor	—	**—**	110V DC	**DR30K0L-HQ□**
		—	**—**	220V DC	**DR30K0L-MQ□**
Dome with dimmer control KK02-144A	Without	6V AC	**DR30D1L-A3□**	5.5V AC/DC	**DR30D1L-54□**
		6V DC	**DR30D1L-63□**	—	**—**
		12V AC/DC	**DR30D1L-B3□**	—	**—**
		15V AC/DC	**DR30D1L-C3□**	15V AC/DC	**DR30D1L-C4□**
		24V AC/DC	**DR30D1L-E3□**	24V AC/DC	**DR30D1L-E4□**
	With	100V–110V AC	**DR30D1L-H3□**	100V–110V AC	**DR30D1L-H4□**
		200V–220V AC	**DR30D1L-M3□**	200V–220V AC	**DR30D1L-M4□**

Note: □ *See page 04/91*

■ Pilot lights/short-body with transformer

Lens	LED lamp Lamp voltage	Type	Incandescent lamp Lamp voltage	Type
Dome KK02-141A	100–110V AC 200–220V AC	**DR30D0L-H9□** **DR30D0L-M9□**	100–110V AC 200–220V AC	**DR30D0L-H8□** **DR30D0L-M8□**
Extended round KK02-142A	100–110V AC 200–220V AC	**DR30E3L-H9□** **DR30E3L-M9□**	100–110V AC 200–220V AC	**DR30E3L-H8□** **DR30E3L-M8□**
Faceted KK02-143A	100–110V AC 200–220V AC	**DR30K0L-H9□** **DR30K0L-M9□**	100–110V AC 200–220V AC	**DR30K0L-H8□** **DR30K0L-M8□**

- **Lens color**

Replace the □ mark by the following lens color code

Color	Green	Red	White	Blue	Yellow	Orange
Code	G	R	W	S	Y	A

- **Lamp voltage**

Available lamp voltage are as follow.

Description	Voltage	Code Standard type LED	 Incandescent	Code Short-body type LED	 Incandescent
Without transformer	5.5V AC/DC	–	54	–	–
	6V AC	A3	–	–	–
	6V DC	63	–	–	–
	12V AC/DC	B3	–	–	–
	15V AC/DC	C3	C4	–	–
	20V AC/DC	–	D4	–	–
	24V AC/DC	E3	E4	–	–
With transformer	100-110V AC	H3	H4	H9	H8
	115-127V AC	L3	L4	L9	L8
	200-220V AC	M3	M4	M9	M8
	230-254V AC	Q3	Q4	–	–
	350-380V AC	S3	S4	–	–
	400-440V AC	T3	T4	–	–
	480V AC	V3	V4	–	–
	500-550V AC	W3	W4	–	–
With resistor unit	110V DC	H7	–	–	–
With resistor	50V DC	FR	FQ	–	–
	110V DC	HR	HQ	–	–
	220V DC	MR	MQ	–	–

■ Pilot lights/standard

Lens	Transformer	LED unit Lamp voltage	Type	Incandescent lamp Lamp voltage	Type
Flush square (34mm sq. transparent lens) AF97-65	Without	6V DC 15V AC/DC 24V AC/DC	**DR30F4M-65□** **DR30F4M-C5□** **DR30F4M-E5□**	5.5V AC/DC 15V AC/DC 24V AC/DC	**DR30F4M-54□** **DR30F4M-C4□** **DR30F4M-E4□**
	With	100–110V AC 200–220V AC	**DR30F4M-H5□** **DR30F4M-M5□**	100–110V AC 200–220V AC	**DR30F4M-H4□** **DR30F4M-M4□**
Flush rectangular (Transparent lens) AF97-61	Without	6V DC 15V AC/DC 24V AC/DC	**DR30F4N-65□** **DR30F4N-C5□** **DR30F4N-E5□**	5.5V AC/DC 15V AC/DC 24V AC/DC	**DR30F4N-54□** **DR30F4N-C4□** **DR30F4N-E4□**
	With	100–110V AC 200–220V AC	**DR30F4N-H5□** **DR30F4N-M5□**	100–110V AC 200–220V AC	**DR30F4N-H4□** **DR30F4N-M4□**
Flush square (40mm sq. transparent lens) 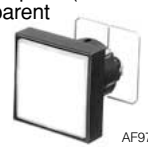 AF97-63	Without	6V DC 15V AC/DC 24V AC/DC	**DR30M4M-65□** **DR30M4M-C5□** **DR30M4M-E5□**	5.5V AC/DC 15V AC/DC 24V AC/DC	**DR30M4M-54□** **DR30M4M-C4□** **DR30M4M-E4□**
	With	100–110V AC 200–220V AC	**DR30M4M-H5□** **DR30M4M-M5□**	100–110V AC 200–220V AC	**DR30M4M-H4□** **DR30M4M-M4□**

• Color plate

Replace the □ mark by the following color plate color code

Color	Green	Red	White	Blue*	Yellow	Orange
Code	G	R	W	S	Y	A

Note: * Incandescent lamp only

• Lamp voltage

Available lamp voltage are as follow.

Description	Voltage	Code Standard type LED	Incandescent
Without transformer	5.5V AC/DC	–	54
	6V AC	A5	–
	6V DC	65	–
	12V AC	25	–
	12V AC/DC	B5	–
	15V AC/DC	C5	C4
	20V AC/DC	–	D4
	24V AC/DC	E5	E4
With transformer	100-110V AC	H5	H4
	115-127V AC	L5	L4
	200-220V AC	M5	M4
	230-254V AC	Q5	Q4
	350-380V AC	S5	S4
	400-440V AC	T5	T4
	480V AC	V5	V4
	500-550V AC	W5	W4
With resistor unit	110V DC	HE	–

■ Joy stick selector switches

Handle	Terminal	Operating directions	Contact arrangement	Type: Manual return	Type: Spring return
Ball type without lock AF97-48	Screw	↕	1NO × 2	**AR30A0N-A0A0B**	**AR30A5N-A0A0B**
			1NO + 1NC × 2	**AR30A0N-1010B**	**AR30A5N-1010B**
		↕↔	1NO × 4	**AR30A0N-AAAAB**	**AR30A5N-AAAAB**
			1NO + 1NC × 4	**AR30A0N-1111B**	**AR30A5N-1111B**
	Solder/tab	↕	1NO + 1NC × 2	**AR30A0H-1010B**	**AR30A5H-1010B**
			2NO + 2NC × 2	**AR30A0H-2020B**	**AR30A5H-2020B**
		↕↔	1NO + 1NC × 4	**AR30A0H-1111B**	**AR30A5H-1111B**
			2NO + 2NC × 4	**AR30A0H-2222B**	**AR30A5H-2222B**
Ball type with lock AF97-44	Screw	↕	1NO × 2	**AR30A1N-A0A0B**	**AR30A6N-A0A0B**
			1NO + 1NC × 2	**AR30A1N-1010B**	**AR30A6N-1010B**
		↕↔	1NO × 4	**AR30A1N-AAAAB**	**AR30A6N-AAAAB**
			1NO + 1NC × 4	**AR30A1N-1111B**	**AR30A6N-1111B**
	Solder/tab	↕	1NO + 1NC × 2	**AR30A1H-1010B**	**AR30A6H-1010B**
			2NO + 2NC × 2	**AR30A1H-2020B**	**AR30A6H-2020B**
		↕↔	1NO + 1NC × 4	**AR30A1H-1111B**	**AR30A6H-1111B**
			2NO + 2NC × 4	**AR30A1H-2222B**	**AR30A6H-2222B**
Rubber cap type without lock AF97-57	Screw	↕	1NO × 2	**AR30A2N-A0A0B**	**AR30A7N-A0A0B**
			1NO + 1NC × 2	**AR30A2N-1010B**	**AR30A7N-1010B**
		↕↔	1NO × 4	**AR30A2N-AAAAB**	**AR30A7N-AAAAB**
			1NO + 1NC × 4	**AR30A2N-1111B**	**AR30A7N-1111B**
	Solder/tab	↕	1NO + 1NC × 2	**AR30A2H-1010B**	**AR30A7H-1010B**
			2NO + 2NC × 2	**AR30A2H-2020B**	**AR30A7H-2020B**
		↕↔	1NO + 1NC × 4	**AR30A2H-1111B**	**AR30A7H-1111B**
			2NO + 2NC × 4	**AR30A2H-2222B**	**AR30A7H-2222B**

• Operating direction

- Directions other than those shown in the table above can be provided.
- For types AR30A□N-1 2 3 4 B, designate the contact arrangement codes for the necessary operating directions (1: Upper, 2: Right, 3: Lower, 4: Left). Designate "0" for unnecessary directions.

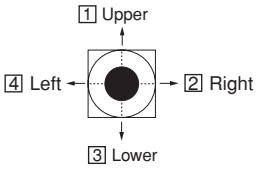

• Contact arrangement

Contact arrangement		–	1NO	1NC	1NO+1NC	2NO	2NC	2NO+2NC
Manual return Spring return	Screw	0	A	B	1	D	E	–
	Solder/Tab	0	–	–	1	–	–	2

- Spring/manual return are also available, contact FUJI .

■ Buzzers

Sound	Description	Transformer	Operating voltage	Type
Electronic sound AF96-381	• LED operation indicator (Red) • Intermittent/continuous sound selection • Sound level: 90dB (0.1m) 70dB (1m)	Without	6V AC 6V DC 12 to 24V AC/DC 35 to 48V AC/DC	**DR30B5-AB** **DR30B5-6B** **DR30B5-EB** **DR30B5-FB**
		With	100 to 110V AC 200 to 220V AC	**DR30B5-HB** **DR30B5-MB**
		With resistor unit	100 to 110V DC	**DR30B5-1B**
Electronic sound (economy) KK02-145A	• Sound level: 90dB (0.1m) 70dB (1m)	Without	6V DC 24V AC 24V DC	**DR30B6-6B** **DR30B6-GB** **DR30B6-EB**
		With	100 to 110V AC 200 to 220V AC	**DR30B6-HB** **DR30B6-MB**
Magnetic sound AF96-378	• Sound level: 90dB (0.1m) 70dB (1m)	Without	100 to 110V AC 200 to 220V AC	**DR30B0-HB** **DR30B0-MB**
Electronic sound (IP54) AF96-245	• Intermittent/continuous sound selection • Sound level: 80dB (0.1m) 60dB (1m)	Without	6V AC 6V DC 12 to 24V AC/DC 35 to 48V AC/DC	**DR30B8-AB** **DR30B8-6B** **DR30B8-EB** **DR30B8-FB**
		With	100 to 110V AC 200 to 220V AC	**DR30B8-HB** **DR30B8-MB**
		With resistor unit	100 to 110V DC	**DR30B8-1B**

Notes: • Intermittent/continuous sound selection (DR30B5, B8)
See the "Short-circuit terminal" in the dimensions diagram on the *04/107*. page, and select as follows:
• Short-circuit terminal mounted ⟶ Intermittent sound
• Short-circuit terminal not mounted ⟶ Continuous sound

■ Numerical indicators

Display	Terminal	Input logic	Operating voltage	Type	Luminous color
One-digit KK02-55B	Soldering terminal	Negative	12V DC	**DR30N1-NB□**	Replace the □ mark by the luminous color code R: Red G: Green
			24V DC	**DR30N1-NE□**	
		Positive	12V DC	**DR30N1-PB□**	
			24V DC	**DR30N1-PE□**	
	Soldering terminal with connector	Negative	12V DC	**DR30N1-NB□C**	
			24V DC	**DR30N1-NE□C**	
		Positive	12V DC	**DR30N1-PB□C**	
			24V DC	**DR30N1-PE□C**	
	With right angle connector Socket FCN-723J010/1 Contact block FCN-723J-AU/Q (Fujitsu component)	Negative	12V DC	**DR30N1-NB□R**	
			24V DC	**DR30N1-NE□R**	
		Positive	12V DC	**DR30N1-PB□R**	
			24V DC	**DR30N1-PE□R**	
Two-digit KK02-56B	Soldering terminal	Negative	12V DC	**DR30N2-NB□**	
			24V DC	**DR30N2-NE□**	
		Positive	12V DC	**DR30N2-PB□**	
			24V DC	**DR30N2-PE□**	
	Soldering terminal with connector	Negative	12V DC	**DR30N2-NB□C**	
			24V DC	**DR30N2-NE□C**	
		Positive	12V DC	**DR30N2-PB□C**	
			24V DC	**DR30N2-PE□C**	
	With right angle connector Socket FCN-723J020/2 Contact block FCN-723J-AU/Q (Fujitsu component)	Negative	12V DC	**DR30N2-NB□R**	
			24V DC	**DR30N2-NE□R**	
		Positive	12V DC	**DR30N2-PB□R**	
			24V DC	**DR30N2-PE□R**	

Notes: • Right-angle connector and mounting screws included.
• Terminal dimensions, arrangement, and input conditions: *See page 04/108.*

Discontinued

■ Input specifications

• Wiring diagrams

One-digit

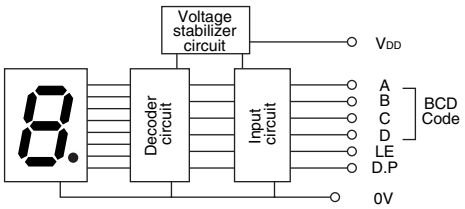

Two-digit

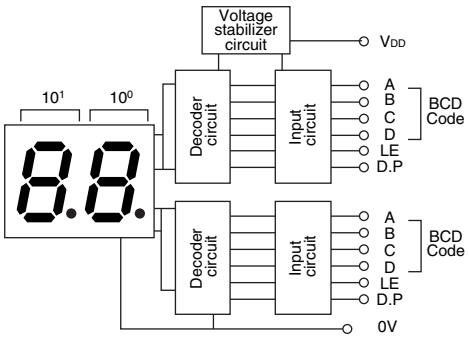

• Truth value chart

Display	Positive logic					Negative logic				
	D	C	B	A	L.E	D	C	B	A	L.E
0	L	L	L	L	L	H	H	H	H	H
1	L	L	L	H	L	H	H	H	L	H
2	L	L	H	L	L	H	H	L	H	H
3	L	L	H	H	L	H	H	L	L	H
4	L	H	L	L	L	H	L	H	H	H
5	L	H	L	H	L	H	L	H	L	H
6	L	H	H	L	L	H	L	L	H	H
7	L	H	H	H	L	H	L	L	L	H
8	H	L	L	L	L	L	H	H	H	H
9	H	L	L	H	L	L	H	H	L	H
Extinguish	H	L	H	L	L	L	H	L	H	H
Extinguish	H	L	H	H	L	L	H	L	L	H
Extinguish	H	H	L	L	L	L	L	H	H	H
Extinguish	H	H	L	H	L	L	L	H	L	H
Extinguish	H	H	H	L	L	L	L	L	H	H
Extinguish	H	H	H	H	L	L	L	L	L	H
Latch	○	○	○	○	H	○	○	○	○	L

Note: ○ Operates independently from the L and H signals.

• Terminal symbol

L.E (Latch Enable):
Holds the last entry when the positive logic type goes to (H) and the negative logic type goes to (L).

D.P (Decimal Point):
Displays a decimal point when the positive logic type goes to (H) and the negative logic type goes to (L).

• BCD input voltage

	12V	24V
L	0 to 1V	0 to 2V
H	9 to 15V	12 to 30V

• Input current

Positive logic	H	2mA max.
Negative logic	L	4mA max.

• Application to PLC

Input logic	Output from PLC	
	Transistor output (source) PNP	Transistor output (sink) NPN
Negative logic	–	○
Positive logic	○	–

Note: ○ Available, – not available

Discontinued

■ Dimensions, mm

● Illuminated pushbuttons

Extended

With transformer

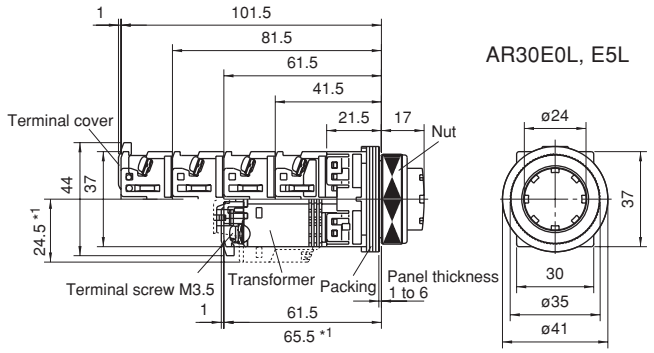

Without transformer

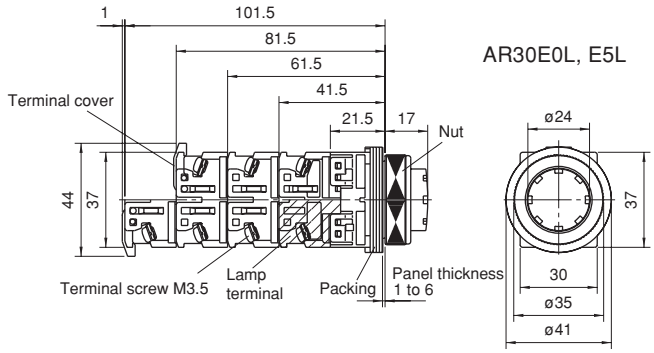

Extended with transparent full guard (24mm dia.)

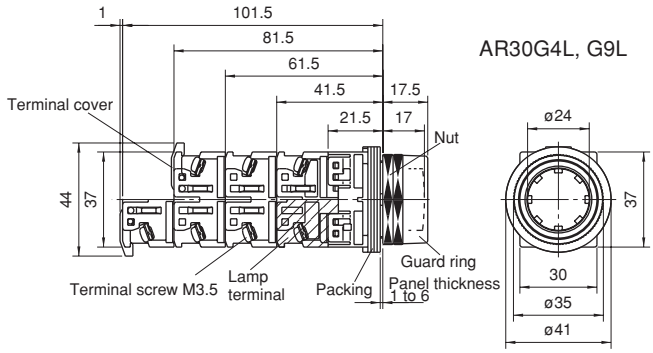

Extended with full guard (24mm dia. with openings)

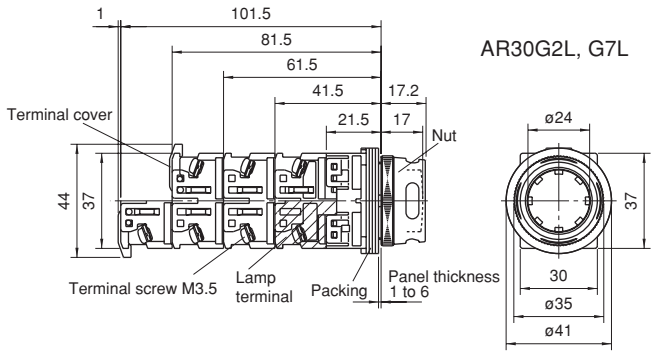

Extended with full guard (24mm dia.)

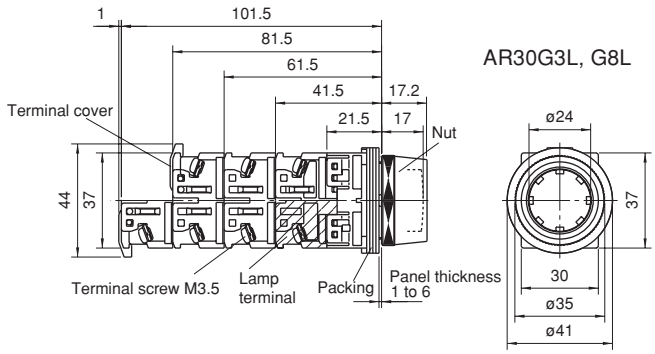

Note: *1 Except for the types 110V AC, 127V AC and 220V AC.

AR30 and DR30
Dimensions

■ Dimensions, mm

● Illuminated pushbuttons

Push-lock, turn-reset (40mm dia. with white arrow)

With transformer

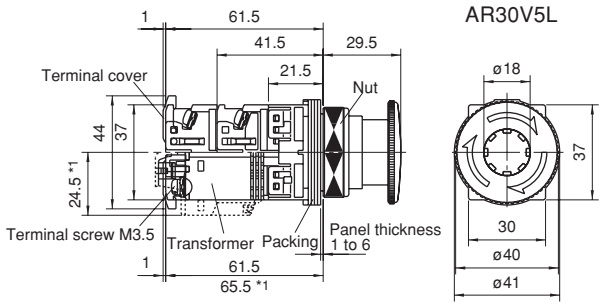

Without transformer

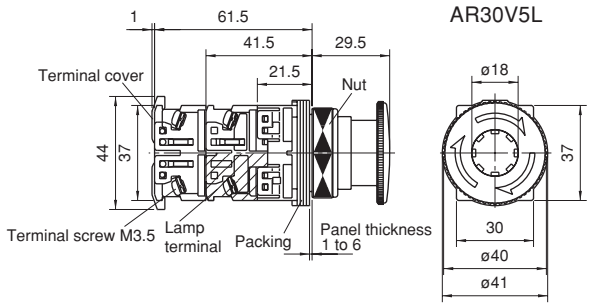

Push-pull

With transformer

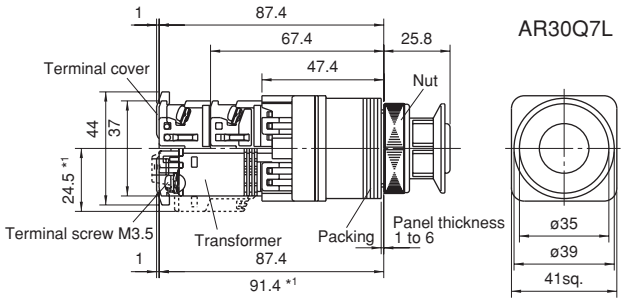

Without transformer

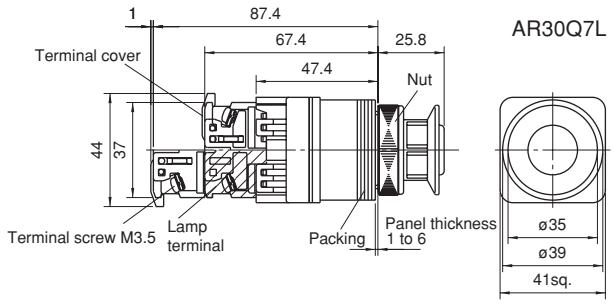

Note: *1 Except for the types 110V AC, 127V AC and 220V AC.

■ Dimensions, mm

● Pushbuttons

Flush/Extended

AR30F0R, F5R, FAR, FBR, E0R, E5R, EAR, EBR

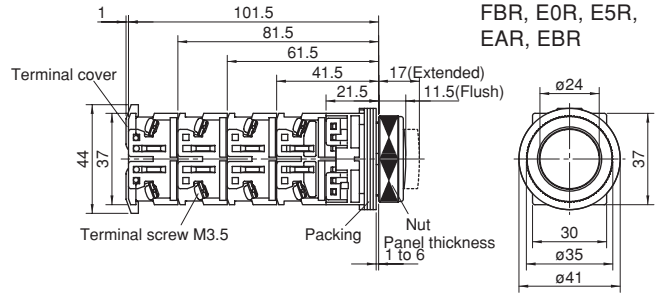

Mushroom (40mm dia.)

AR30M0R, M5R

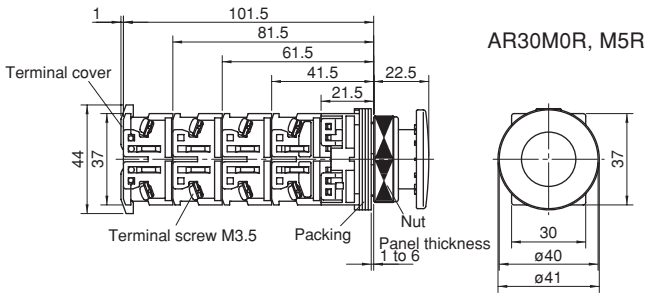

Mushroom (29mm dia.)

AR30M4R

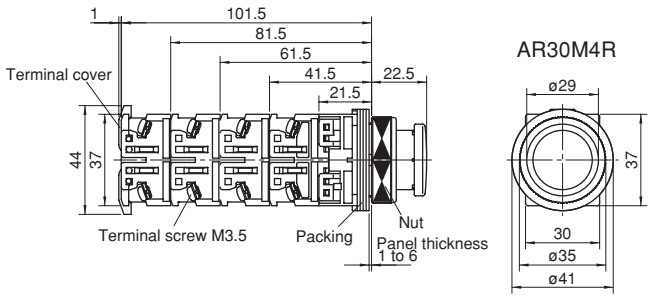

Extended with full guard (24mm dia.)

AR30G1R, G6R

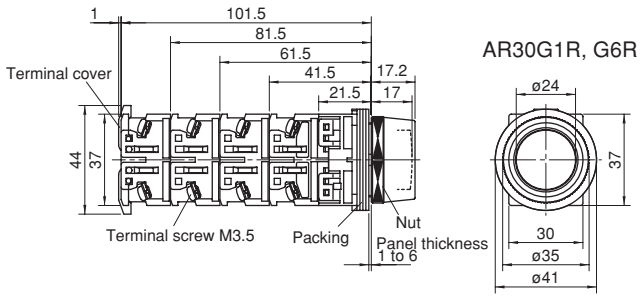

Extended with half guard

AR30G0R, G5R

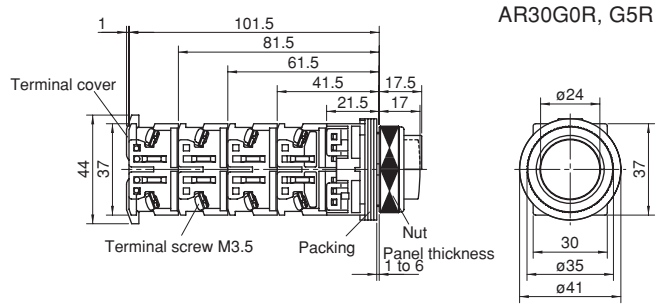

Pin lock

AR30GPR

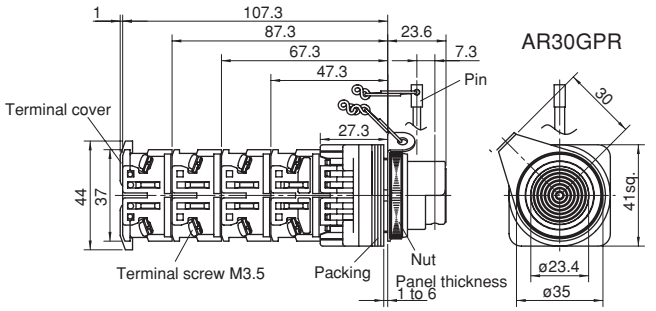

Note:
The enclosed pin can be inserted to lock the pushbutton in a pushed or not pushed state.

Mushroom with full guard (40mm dia.)

AR30M3R, M8R

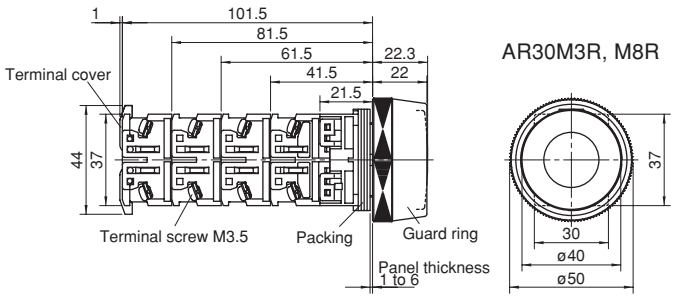

Mushroom with full guard (35mm dia. metal nut)

AR30GSR

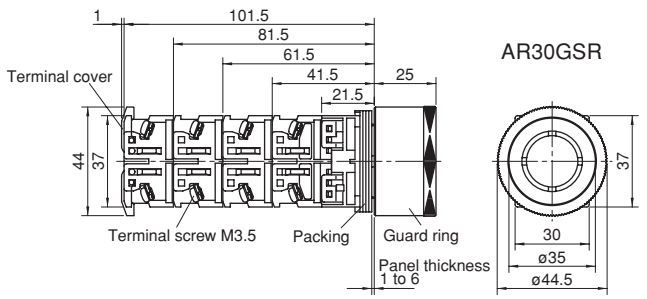

AR30 and DR30
Dimensions

■ Dimensions, mm

● Pushbuttons

Giant

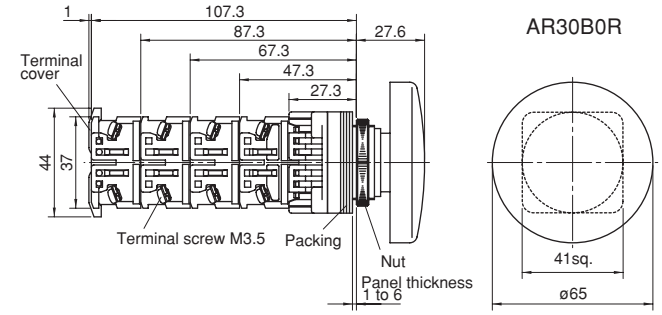

Giant with guard

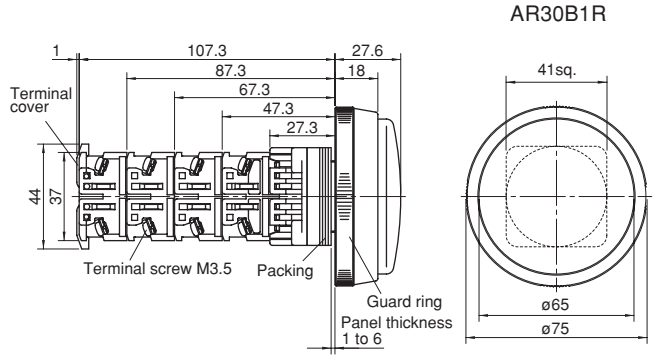

Giant with full guard

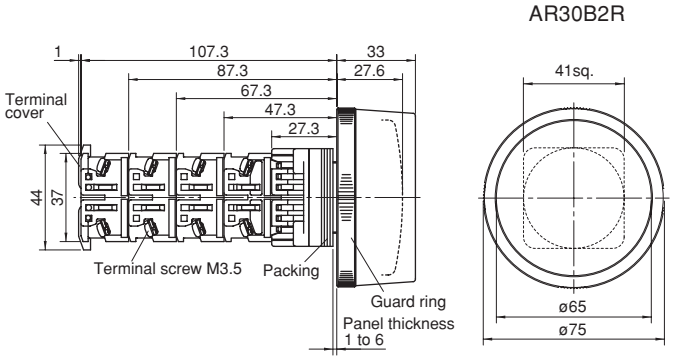

Giant with full guard

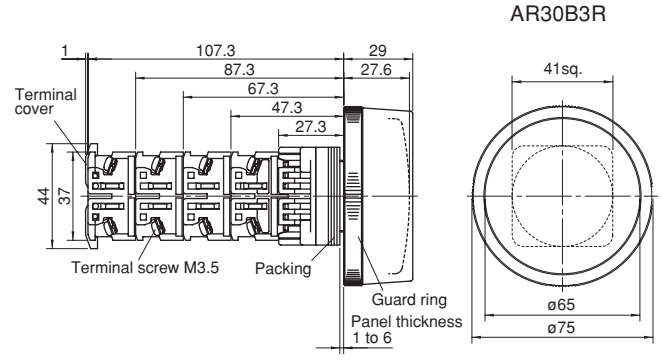

Pushbutton with selector ring (2-position)

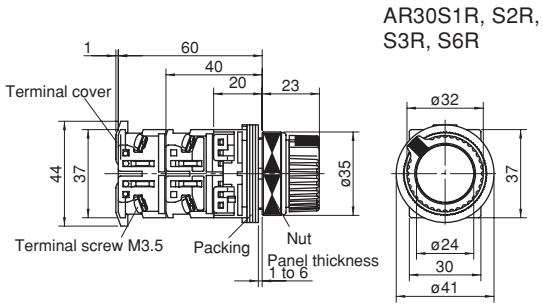

Push, turn-lock

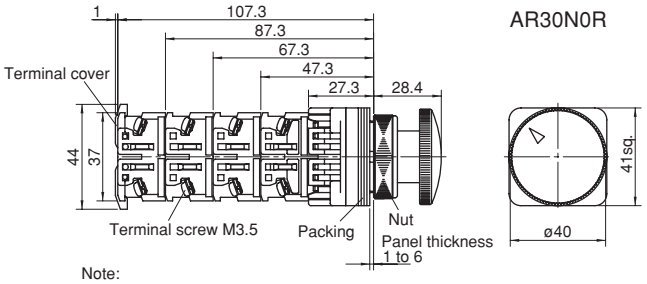

Note:
When the push button is pressed in the left position, it resets automatically (momentary operation).
When pressed and turned to the right it locks, and to the left it resets.

Push-lock, turn-reset (40mm dia. with white arrow)

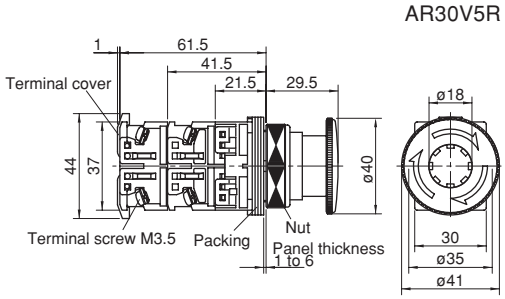

Emergency operating cap

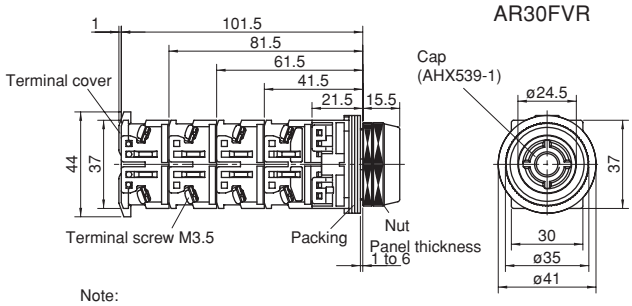

Note:
This is pushbutton switch is operated while holding the cap with the fingertips.
The cap (AHX539-1) can be exchanged.

■ Dimensions, mm

● Emergency stop pushbuttons

Push-lock, turn-reset (40mm dia.)

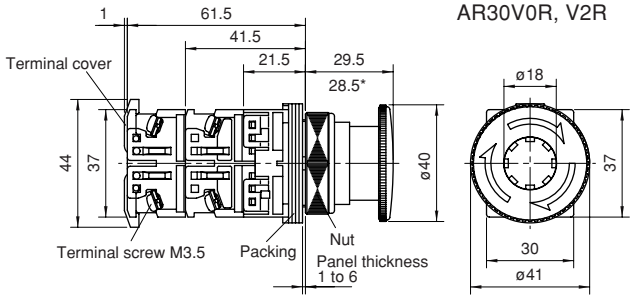

Note: * AR30V2R type

Push-lock, turn-reset (65mm dia. with white allow)

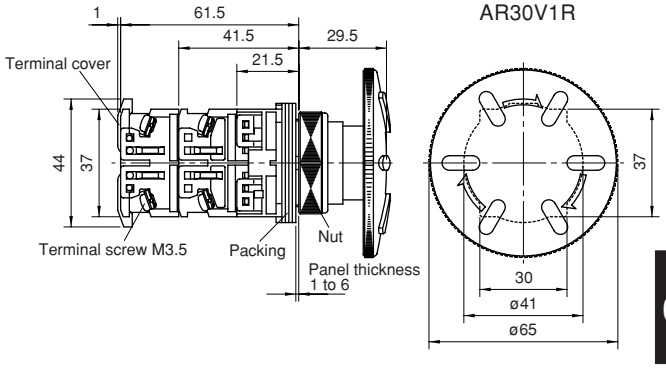

Push-lock, pull-reset (35mm dia.)

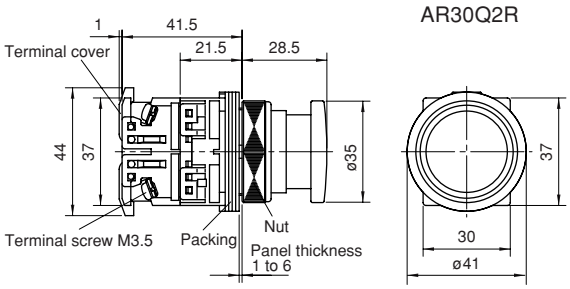

● Emergency stop illuminated pushbuttons

Push-lock, turn-reset (40mm dia.)

With transformer

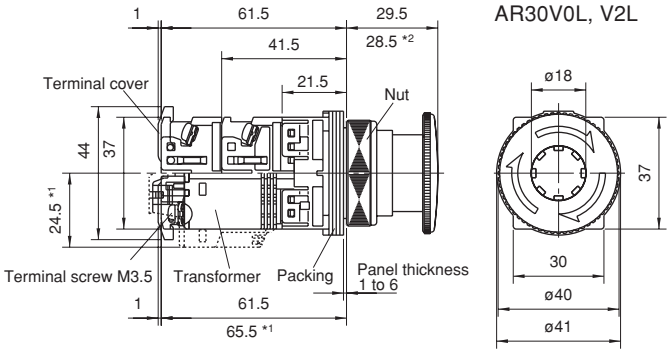

Without transformer

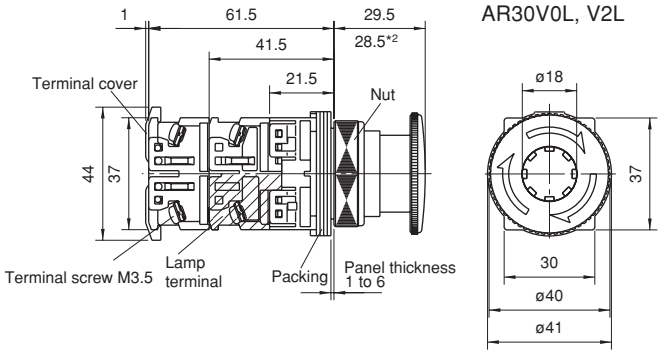

Notes: *1 Except for the types 110V AC, 127V AC and 220V AC.
*2 AR30V2L type

AR30 and DR30
Dimensions

■ Dimensions, mm

● Selector switches

Knob

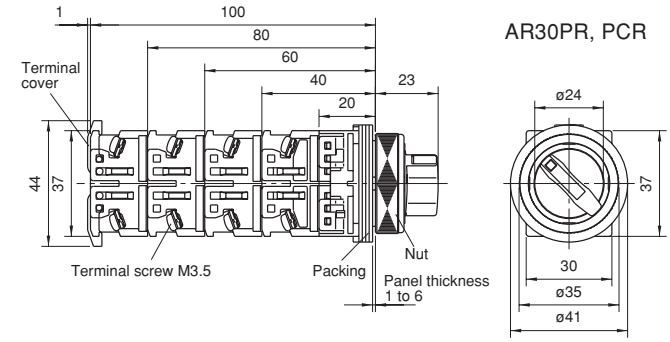

Lever

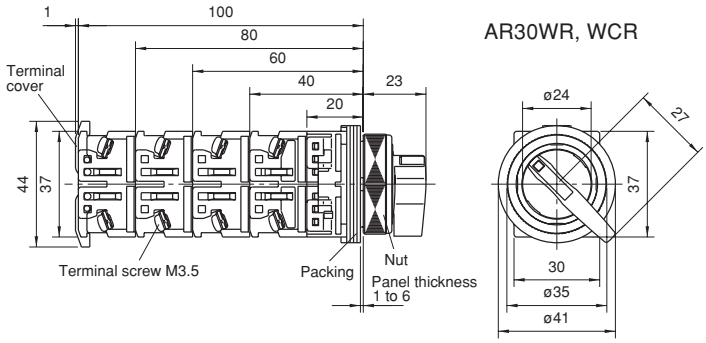

Key

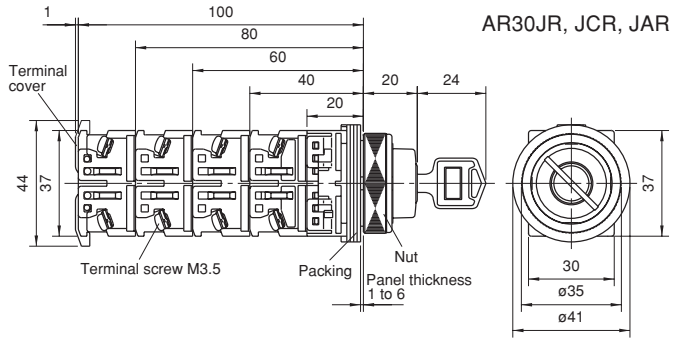

● Illuminated selector switches

Knob

With transformer

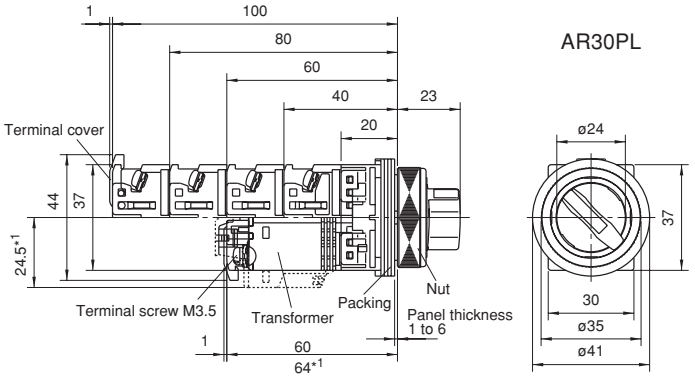

Without transformer

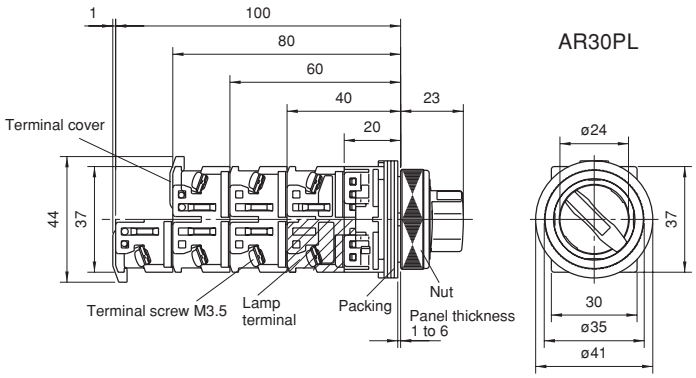

Notes: *1 Except for the types 110V AC, 127V AC and 220V AC.

■ Dimensions, mm

● Pilot lights

Dome

With transformer, with resistor unit

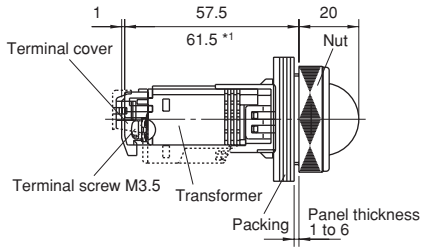

Without transformer

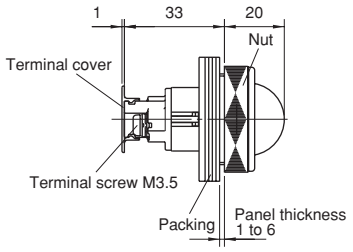

DR30D0L

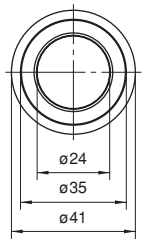

With resistor LED, incandecent (50V DC)

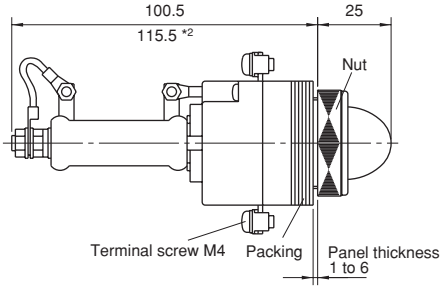

With resistor Incandescent (110, 220V DC)

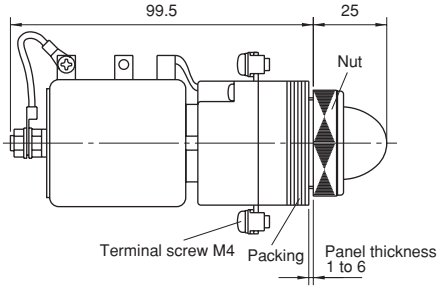

DR30D0L

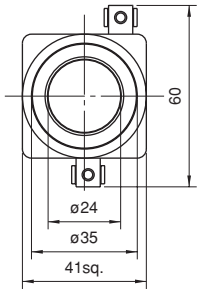

Short-body / with transformer

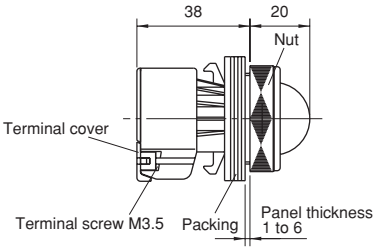

DR30D0L

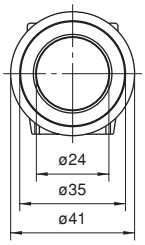

Extended

With transformer, with resistor unit

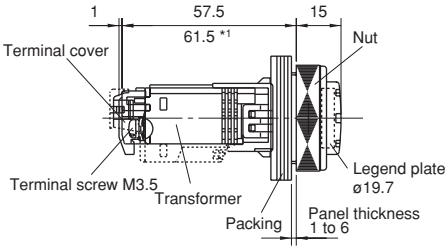

Without transformer

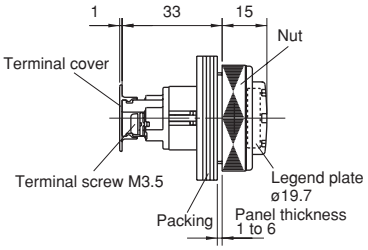

DR30E3L

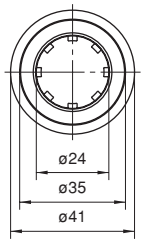

Short-body / with transformer

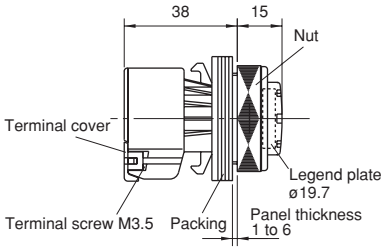

DR30E3L

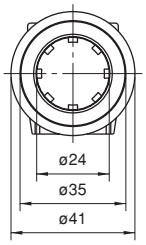

Notes: *1 Except for the types 110V AC, 127V AC and 220V AC.
*2 Incandecent (50V DC) type only

AR30 and DR30
Dimensions

■ Dimensions, mm

● Pilot lights

Faceted

With transformer, with resistor unit

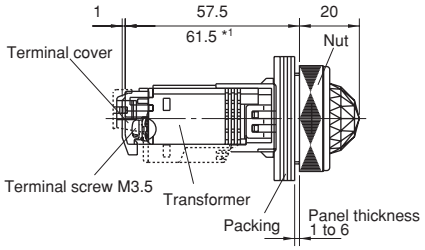

Without transformer

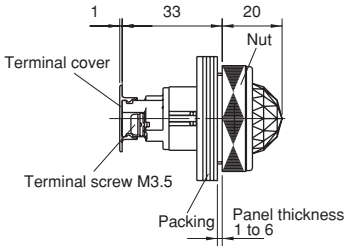

DR30K0L

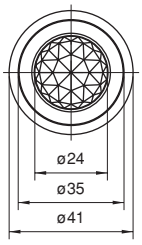

With resistor LED, incandescent (50V DC)

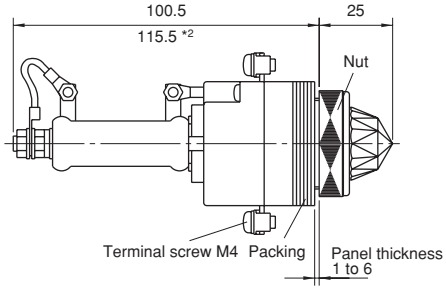

With resistor LED, incandescent (110, 220V DC)

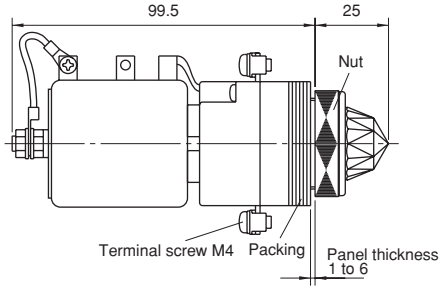

DR30K0L

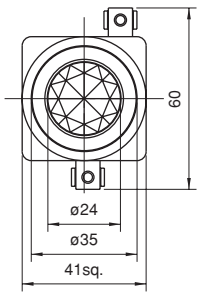

Short-body / with transformer

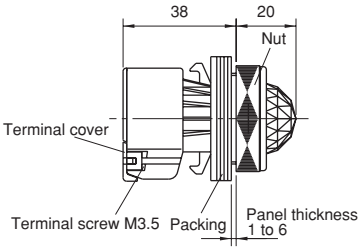

DR30K0L

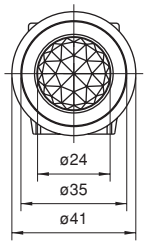

Dome with dimmer control

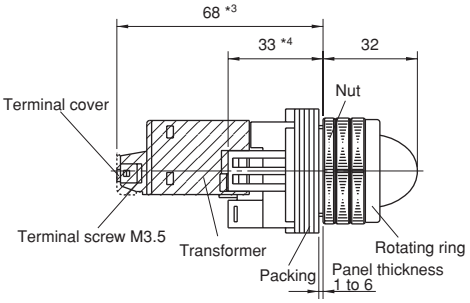

DR30D1L

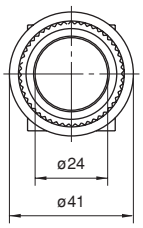

Notes: *1 Except for the types 110V AC, 127V AC and 220V AC.
*2 Incandecent (50V DC) type only
*3 With transformer, with resistor unit type only
*4 For without transformer types, add 1 mm when mounting the terminal cover.

■ Dimensions, mm

● Pilot lights

Flush square (34mm sq. transparent lens)

With transformer, with resistor unit

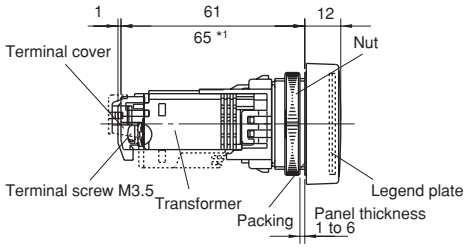

Without transformer

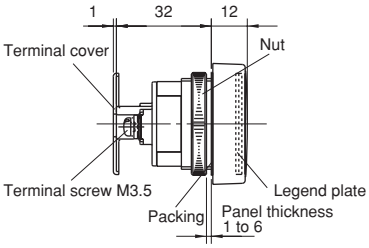

DR30F4M

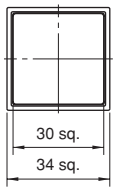

Flush rectangular (Transparent lens)

With transformer, with resistor unit

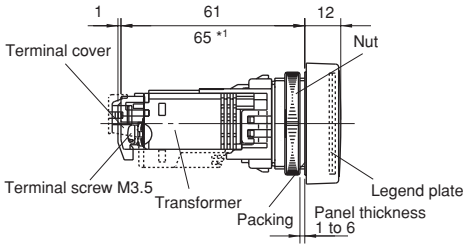

Without transformer

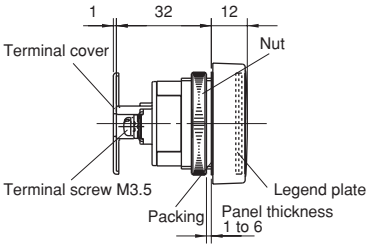

DR30F4N

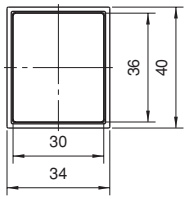

Flush square (40mm sq. transparent lens)

With transformer, with resistor unit

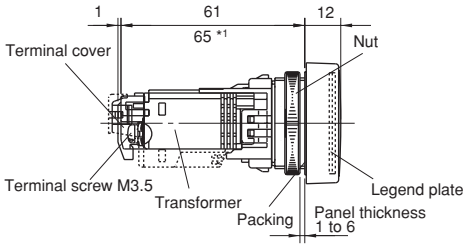

Without transformer

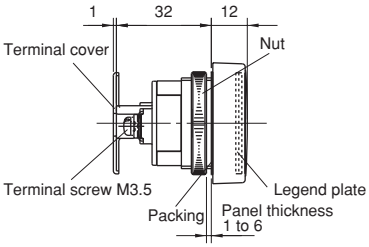

DR30M4M

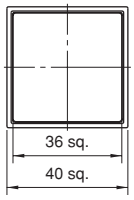

Note: *1 Except for the types 110V AC, 127V AC and 220V AC.

AR30 and DR30
Dimensions

■ Dimensions, mm

● Joy stick selector switches

Ball type (without lock)
AR30A0N, A5N: Screw terminal

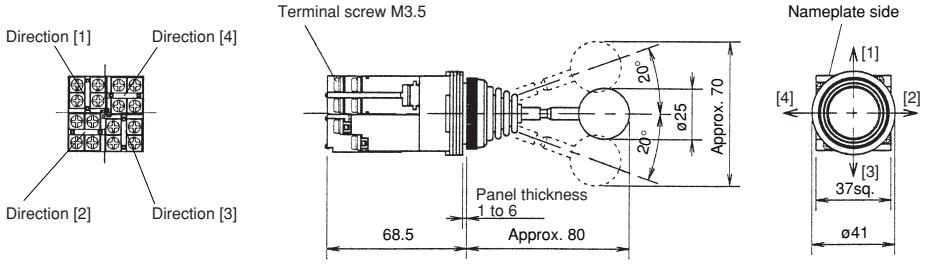

Ball type with lock
AR30A1N, A6N: Screw terminal

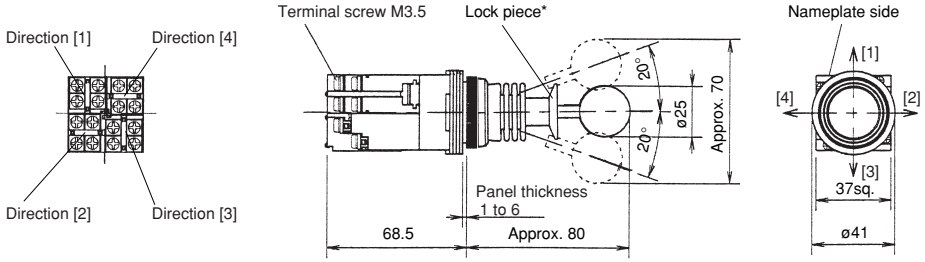

Notes * The contact arrangement is operable in the designated direction by pulling the lock piece in the central position with the fingers. The lock piece will return automatically and locks when the lock piece is released in the central position.
The lock piece locks in the central position only.

Rubber cap type (without lock)
AR30A2N, A7N: Screw terminal

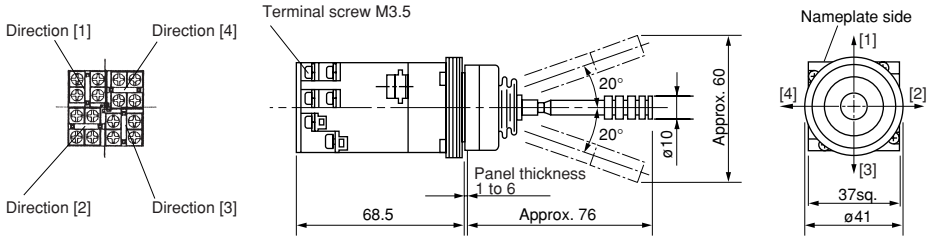

Solder/tab terminal: **AR30A□H**

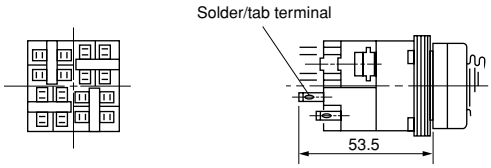

■ Dimensions, mm

● Buzzers

Electronic sound

With transformer

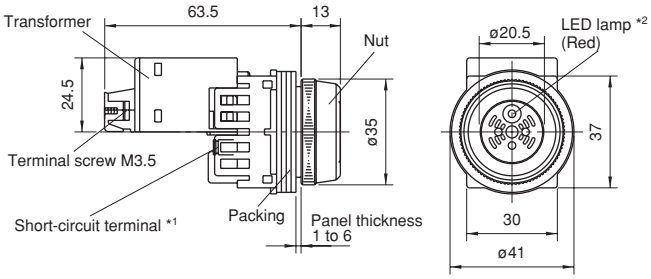

Without transformer

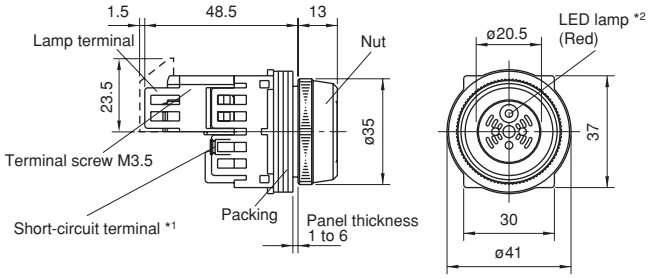

Magnetic sound

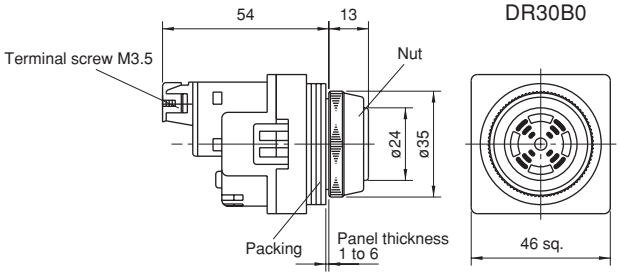

Electronic sound (IP54)

With transformer

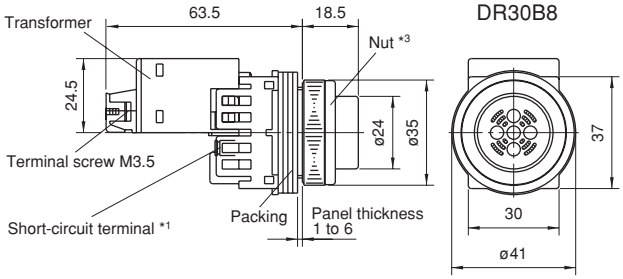

Without transformer

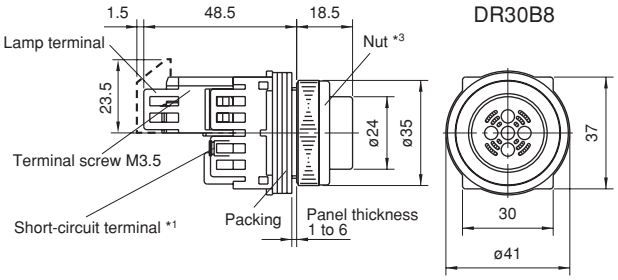

Notes: *1 There are no short-circuit terminals with DR30B6. (Continuous sound only)
*2 There are no LED lamps with DR30B6.
*3 The nut and cap are united with DR30B8.

AR30 and DR30
Dimensions

■ Dimensions, mm

• Numerical indicators

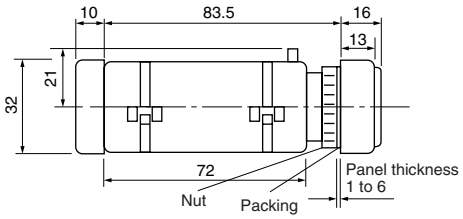

One-digit
DR30N1

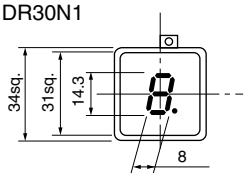

Two-digit
DR30N2

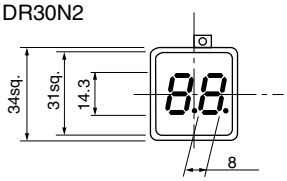

• Terminals

Solder terminal

One-digit, two-digit

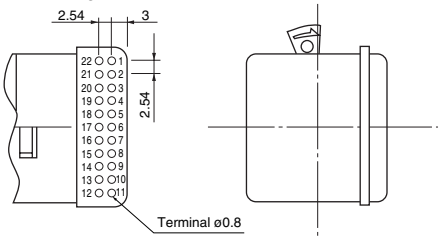

Input conditions

One-digit

V_{DD}		22	1	V_{DD}	
		21	2		
NC		20	3	C	
NC		19	4	B	
NC		18	5	LE	
NC		17	6	D.P	
NC		16	7	D	
NC		15	8	A	
		14	9		
0V		13	10	0V	
0V		12	11	0V	

Two-digit

V_{DD}		22	1	V_{DD}	
		21	2		
10^1	C	20	3	C	10^0
	B	19	4	B	
	LE	18	5	LE	
	D.P	17	6	D.P	
	D	16	7	D	
	A	15	8	A	
		14	9		
0V		13	10	0V	
0V		12	11	0V	

Solder terminal with connector

One-digit, two-digit

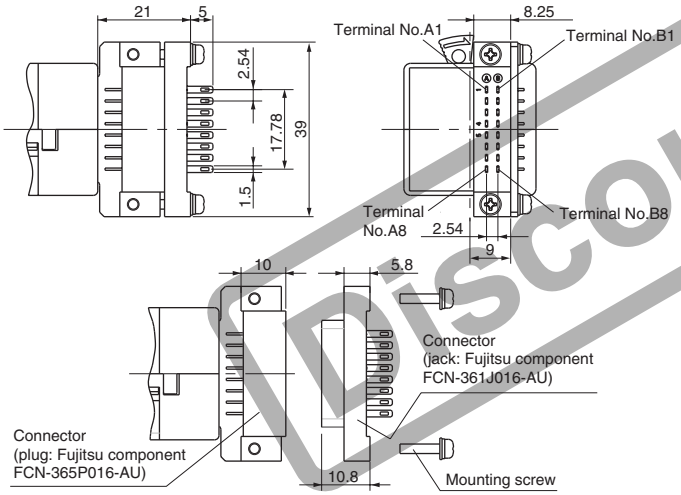

One-digit

NC		A1	B1	V_{DD}
NC		A2	B2	C
NC		A3	B3	B
NC		A4	B4	LE
NC		A5	B5	D.P
NC		A6	B6	D
0V		A7	B7	A
NC		A8	B8	NC

Two-digit

10^1	C	A1	B1	V_{DD}	
	B	A2	B2	C	10^0
	LE	A3	B3	B	
	D.P	A4	B4	LE	
	D	A5	B5	D.P	
	A	A6	B6	D	
0V		A7	B7	A	
NC		A8	B8	NC	

With right angle connector

One-digit

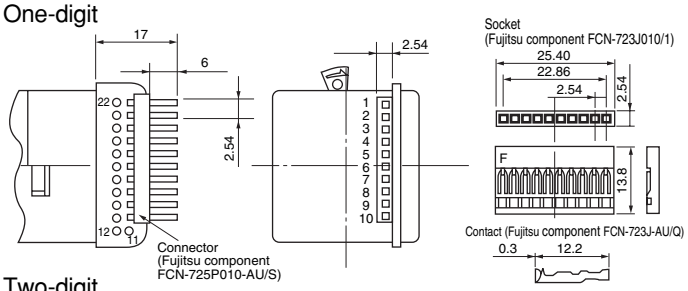

Two-digit

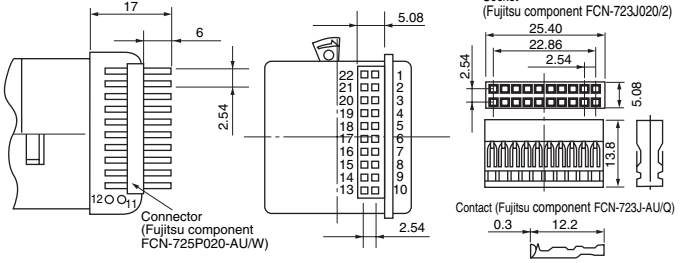

One-digit

V_{DD}		22	1	V_{DD}	
		21	2		
NC		20	3	C	
NC		19	4	B	
NC		18	5	LE	
NC		17	6	D.P	
NC		16	7	D	
NC		15	8	A	
		14	9		
0V		13	10	0V	

Two-digit

V_{DD}		22	1	V_{DD}	
		21	2		
10^1	C	20	3	C	10^0
	B	19	4	B	
	LE	18	5	LE	
	D.P	17	6	D.P	
	D	16	7	D	
	A	15	8	A	
		14	9		
0V		13	10	0V	

Note: V_{DD}: Input voltage 12V or 24V
NC: No connect

Discontinued

Notes on use

■ Panel cutout hole

Fig. 1 Panel cutout hole dimensions, mm

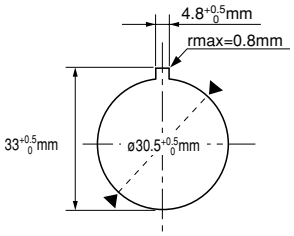

Note : If key-washer or legend plate are not used, 4.8mm-wide. location holes shown in Fig. 1 need not be cutout.

■ Mounting operator to panel

1. Pushbutton with a round bezel (ordinary mounting)

Insert the operator into the cutout hole from the back of the panel, and tighten the nut with the AHX001 wrench from the front of the panel to secure the operator as shown in Fig.2.

Fig. 2 Pushbutton with a round bezel

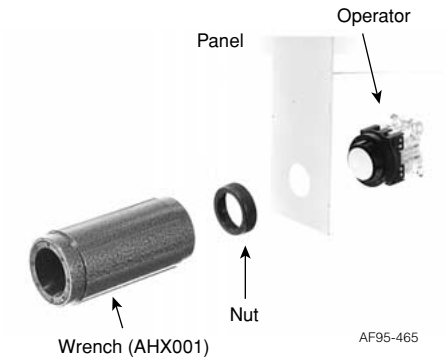

Note : Recommended tightening torque is from 1.5 to 2N·m.

2. AR30V0R, V0L, V2R, V2L, V5R, V5L

(1) The button is removed after loosening the center button by inserting the end of the AR9A002 tightening wrench or the AR9A005 wrench (enclosed with pushbutton) into the holes in the center button and turning counterclockwise, as shown in Fig.3.
(2) Attach the operator in the same manner as described in step 1.

Fig. 3

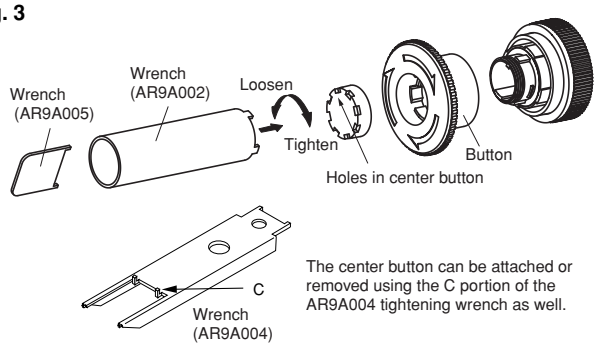

Insert the operator into the cutout hole from the back of the panel, and as shown in Fig.4, insert the pushbutton into the operator cylinder while aligning the grooves inside the pushbutton with the protrusions on the operator.

Fig. 4 Setting pushbutton to operator cylinder

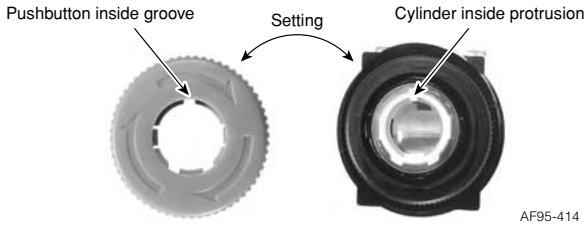

3. AR30WR, WCR

(1) As shown in the following figure, insert the tip of a flathead screwdriver into the selector tip groove. Rotate the screwdriver in the direction indicated by the arrow until the selector tip rises, and draw out the knob.
(2) Attach the operator in the same manner as described in step 1.
(3) Insert the knob, with the selector tip in the floated state, into the original position of the rotation tube, and push the selector tip into place.

Fig. 5

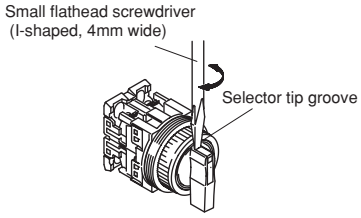

4. AR30M0R, M4R, M5R, B0R, Q7L

(1) Loosen the button by hand.
(2) Attach the operator in the same manner as described in step 1.
(3) Screw in the button by hand, making sure that the button is screwed in all the way. (Recommended tightening torque: 0.3 to 0.5 N•m)

Fig. 6

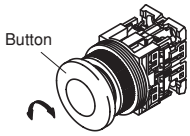

5. AR30M3R, M8R, B1R, B2R and B3R

The outer circumference of the nut is threaded, so be careful not to cut your hand on it.

(1) Loosen and remove the guard ring by hand.
(2) Loosen and remove the button and nut by hand.
(3) Insert the operator into the cutout hole from the back of the panel, and tighten the nut to secure it in place. (Recommended tightening torque: 0.3 to 0.5 N•m)
(4) Screw in the button by hand, making sure that it is screwed in all the way. (Recommended tightening torque: 0.3 to 0.5 N•m)
(5) Loosen and remove the guard ring by hand. (Recommended tightening torque: 1.5 to 2.5 N•m)

Fig. 7

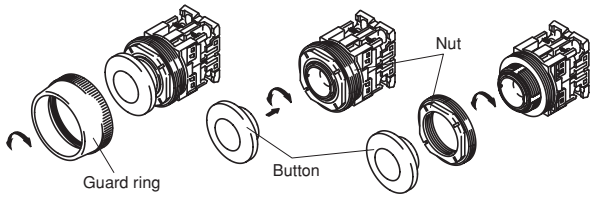

6. AR30N0R, V1R, Q2R

(1) Loosen and remove the screw on the side of the button, taking care not to loosen the screw.
(2) Attach the operator in the same manner as described in step 1.
(3) Attach and secure the button in place with the screw, making sure that the head of the screw does not protrude from the side.
(4) Recommended tightening torque: N0R, V1R 0.5 to 1.0N•m
Q2R 0.3 to 0.5N•m

Fig. 8

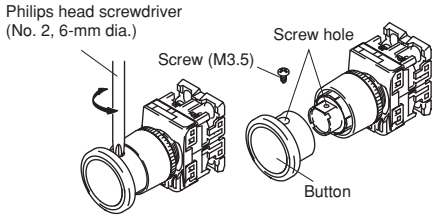

7. AR30GSR

(1) Insert the tips of the AR9A001 wrench into the indentations around the button center, and turn the wrench to loosen and remove the button.
(2) Loosen and remove the guard ring by hand.
(3) Insert the switch operator into the cutout hole from the back of the panel, and secure it with the guard ring from the front of the panel. (Recommended tightening torque: 1.5 to 2.5 N•m)
(4) Attach and secure the button with the AR9A001 wrench. (Recommended tightening torque: 0.3 to 0.5 N•m)

Fig. 9

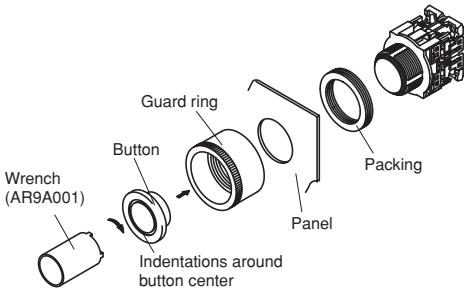

8. DR30F4M, F4N, M4M

Insert the pilot lights from the front of the panel and fix it with the AHX536 tightening wrench from the back of the panel.
(1) Recommended tightening torque: 1 to 1.5N•m
(2) For pilot lights with transformers and resistance units, remove the transformer or resistance unit in advance. (Fig.10)

Fig. 10

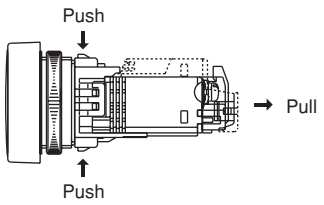

9. Mounting a 22mm-dia. command switch with a square button and a square bezel, or with a round button and a square bezel, to a panel cutout hole for a 30mm-dia. command switch using an adapter

As shown in Fig. 11, mount an adapter and packing onto a 22mm-dia. command switch (AR22, DR22 series) with a square button and a square bezel or one with a round button and a square bezel. Then, insert the switch operator into the panel cutout hole from the front of the panel. Use AR9A004 wrench section A to tighten the locking nut from behind the panel to secure the switch.
Use the adapter accessory nut for this purpose. Do not use the command switch accessory nut.

Fig. 11 Command switch with a square button and a square bezel, and command switch with a round button and a square bezel

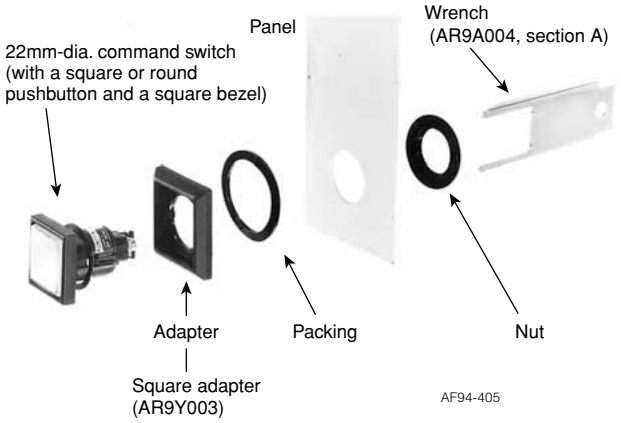

Note : • Recommended tightening torque is from 1 to 1.5N•m.
• Panel thickness: 2.5 to 5mm

This adapter can be used with the following 22mm-dia. Command switches :
- AR22F0M, F5M, E0M, E5M, F0P, F5P, E0P, E5P, M4P
- AR22F0S, F5S, E0S, E5S, F0Y, F5Y, E0Y, E5Y, M4Y
- AR22PY, PCY, WY, WCY, RY, RCY, JY, JCY, PP
- DR22F3M, F4M, F5M, E3M, E3P

10. AR30S1R, S2R, S3R, S6R

(1) Attach the operator in the same manner as described in step 1.
(2) Attach the rosette assembly to the operator.
(3) Pressing the rosette from the directions indicated by the arrows, insert the selector tip in the groove.
(4) Make sure that the selector tip is inserted completely.
(5) To remove the rosette, use a small flathead screwdriver to remove the selector tip as described in step 3, and then remove the rosette.

Fig. 12

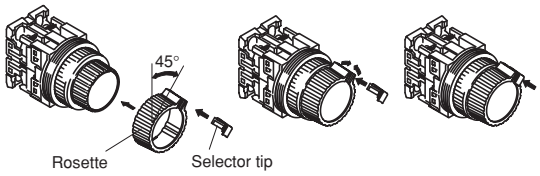

11. AR30A (joy stick selector)
(1) Remove the clamp ring as shown in the following figure.
(2) Attach the operator in the same manner as described in step 1.
Note: Even if a lock type is used, remove the clamp ring in the same manner.

Fig. 13

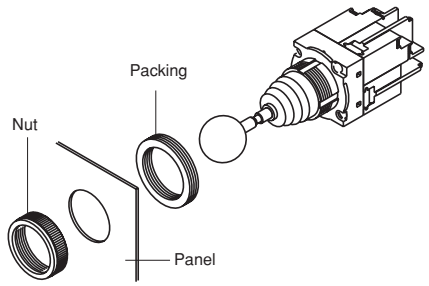

12. Numerical indicators
See page 04/54
Use the AHX536 tightening wrench.

■ Water-proof and dust-proof cap
Applicable type: Water-proof cap AHX052
Dust-proof cap AHX032, 033, 034
AHX113
AHX157

When attached to the panel in combination with a water-proof or dust-proof cap, the water-proof cap or dust-proof cap may sink downward and prevent the depressed button from returning to its original position.
As shown in the following figure, cut an approximately 5-mm air outlet in the portion of the ring packing touching the panel surface. Also, reduce the number of packing rings by one below the standard number. The clamp ring tightening torque is 1.5 to 2.5 N•m.

Fig. 14

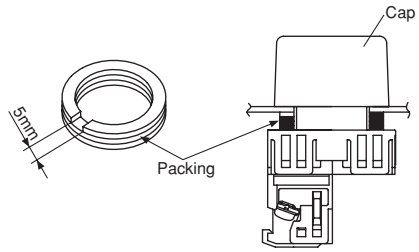

Degree of protection
The water-proof cap or dust-proof cap seals the panel surface to provide IP65 protection.

■ Applicable panel thickness
The AR30/DR30 series switches are mountable to panels with the thickness given in the table below.

Switch mounting condition		Applicable panel thickness
Without accessories		1 to 6mm
With accessories	AR9Y003 adapter	2.5 to 5mm

■ Using accessory ring-packings
Use the required number of ring-packings (1.6mm-thick, 4 pieces, resin mold).
Table below is a guideline for using the packings.
If a locking nut or legend plate is used, the thickness must be counted as an additional panel thickness.

Panel thickness vs. number of packings (reference data)

Effective panel thickness including lock-ring and legend plate thicknesses	Number of packings
1.0mm to less than 2.0mm	
2.0mm to less than 3.6mm	
3.6mm to less than 5.0mm	
5.0mm to less than 6.0mm	

■ Minimum mounting space, mm
The minimum mounting spaces required for AR30/DR30 command switches are given below. (Fig. 15)

Fig. 15

- Illuminated pushbutton and pushbutton
- Emergency stop illuminated pushbutton and emergency stop pushbutton
- Illuminated and non-illuminated selectors
- Pilot light

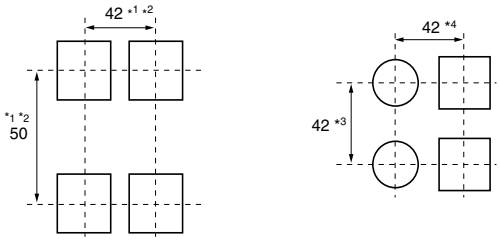

Notes: *1 AR30M3R, M8R, GSR: 55mm
*2 AR30B□R, GPR, V1R: 80mm

Type	*3	*4
F4M	34	34
F4N (Vertical lengthwise mounting)	40	34
(Horizontal lengthwise mounting)	34	40
M4M	40	40
Pilot lights short-body with transformer	50	42
Pilot lights with resistor	80	42

Other items are the same as for the AR22 and DR22 series, *see page 04/53 to 04/57*.

■ Accessories

Description	Type
Wrench KK02-261	**AR9A004** Dimensions, mm: 30 x 100 x 6.5 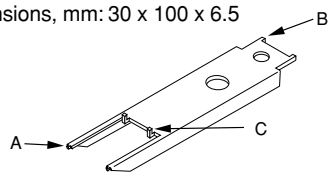 Remarks Section "A" Use this section to tighten the nut for mounting the operator on a panel. Section "B" Use this section to tighten or remove the lens. Applicable type: AR22F0L, F5L, E0L, E5L, F0P, F5P, E0P, E5P AR22G1L, G2L, G4L, G6L, G7L, G9L DR22E3L, E3P AR30E0L, E5L, G2L, G3L, G4L, G7L, G8L, G9L DR30E3L Section "C" Fit the tabs on the section "C" in the center button, and turn the wrench to tighten or remove the button. Applicable type: AR22V (except V4R, VG type) AR30V (except V1R type)
Wrench for AR22, DR22 	**AR9A701** Dimensions, mm: ø28 x 70 Application: AR22, DR22 nut tightening
Wrench KK02-097A	**AHX536** Dimensions, mm: ø32 x 76 Application: DR30F4M, F4N, M4M, N1, N2 nut tightening
Wrench KK02-098A	**AR9A001** Dimensions, mm: ø22 x 35 Application: AR22, DR22 round-type lens tightening AR22E0M, E5M oil-proof cap tightening AR30, DR30 round-type lens tightening AR30GSR button tightening
Wrench (for center button) 	**AR9A002** Dimensions, mm: ø18 x 60 Application: AR22V center button tightening (except V4R, VG type) AR30V center button tightening (except V1R type)
Wrench AF03-5	**AHX701** Dimensions, mm: ø25 x 72.5 Application: DR22N, AR22VG nut tightening

Description	Type
Wrench (for center button) AF93-6	**AHX8003** Dimensions, mm: ø14 x 50 Attaching and removing the center button of the AR22VGF type.
Wrench for AR22,30 and DR22, 30 For ø30 For ø22 AF96-241	**AR9A006** Dimensions, mm: ø40 x 100 To mount an AR22, 30 or DR22, 30 command switch to a panel, use this wrench to tighten the nut securely. It is very easy to fit this wrench onto the nut. The wrench with an inside rubber-lining can be easily used with either your right or left hand.
Wrench for AR30, DR30 AF95-467	**AHX001** Dimensions, mm: ø47 x 100 To mount an AR30 or DR30 command switch to a panel, use this wrench to tighten the nut securely.
Special tool AHX321 SG-873 DR9A321-T AF95-21	**AHX321** Dimensions, mm: 42 x 130 x 6.5 For all types except pilot lights **DR9A321-T** Dimensions, mm: 57 x 130 x 30 For pilot lights • This tool is used to remove contact blocks and transformer units. • The AHX321 can remove round color lens of switches.
Wrench/Lamp changer SI-1030	**AHX702** Dimensions, mm: ø36 x 55 Use this wrench to tighten or remove the lens and lamp. Used with: Lens of DR22D0L, K0L and DR30D0L, K0L Incandescent lamp of pilot lights and illuminated pushbuttons
Lamp changer For BA9S/13 lamp For E12/15 lamp AF95-22	**AHX790** Dimensions, mm: ø14 x 55 • Use this rubber wrench for mounting or removing lamps from pilot lights and illuminated pushbutton switches. • This wrench can be used for both LED and incandescent lamps. • One end is for the BA9S/13 lamp, and the other is for the E12/15 lamp (for use with 30mm dia. pilot lights with resistor). • For 30mm dia. pilot lights with resistor, this tool can also be used to attach or remove incandescent lamps.

Description	Type
Protection cover AF95-29	**AR9E760** This cover protects against accidental operation. The cover lid is returned home with a spring force. (Packing is provided) Used with: AR22F0L, F5L, E0L, E5L, F0M, F5M, E0M, E5M, F0P, F5P, E0P, E5P AR22F0R, F5R, E0R, E5R, F0S, F5S, E0S, E5S, E0Y, E5Y, F0Y, F5Y, FAR, FBR, EAR, EBR Dimensions, mm: 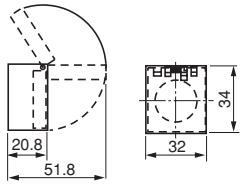
Cover for preventing operating errors with 30mm dia. types AF91-671	**AR9E538** Inadvertent operation can be prevented by fitting a transparent cover with chain in the clamp ring. Used with: AR30F0R, F5R, E0R, E5R, E0L, E5L Dimensions, mm: 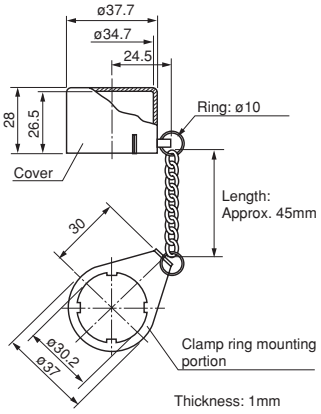
Cover for preventing operating errors with 30mm dia. types .AF93-420	**AHX408** This is a metallic cover for preventing inadvertent operation. Used with: AR30F0R, F5R Dimensions, mm: 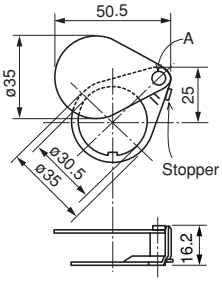 When attaching the cover to a vertical panel, if you attach it so that the portion indicated by an "A" is at the upper right, the stopper causes the cover to stop above the push button to halt further rotation. The material is steel (zinc plated).

Description	Type
Key washer for AR22, DR22 AF95-25	**AR9Y715** Use this metal washer when securing a operator in a 22.3mm dia. panel cutout hole. Dimensions, mm: 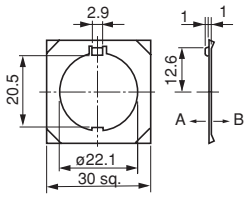 • When the periphery of the panel cutout has a hole to stop rotation, use with side A contacting the panel (except for Joy stick selector types). • Even when the periphery of the panel cutout does not have a hole to stop rotation, if used with side B contacting the panel it can serve as a washer for eliminating play (except for Joy stick selector types).
Key washer for ø30 SC-1016	**AHX082** Use this metal washer when securing an operator in a 30.5mm dia. panel cutout hole. Dimension, mm: 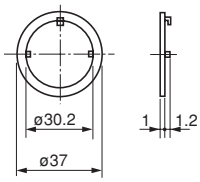
Operator base cover AF95-26	**AR9Y002** Attach this cover to the operator base of a pushbutton switch with only one contact block (1NO or 1NC) to protect against dust.
Adapter for AR22, DR22 .AF95-28	**AR9Y718** Use this resin adapter to mount the AR22/DR22 (switch/pilot light) in a 25.5mm dia. cutout hole on a panel. Dimensions, mm: 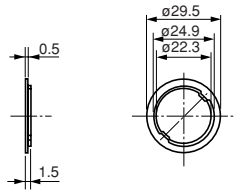

Description	Type
Adapter for AR22 and DR22	**AR9Y008** Use this resin adapter to mount the AR22/DR22 (switch/pilot light) in a 25.5mm dia. cutout hole on a panel. Mounting, mm: 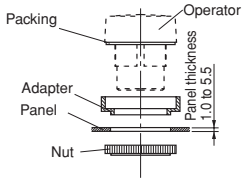 Panel cutout, mm: 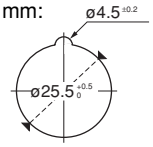 Equipped with device for stopping rotation Used with: AR22, DR22 round head types (except for M3R, M8R, VG□, joy stick selectors and buzzers) Dimensions, mm: 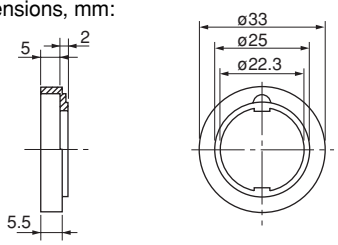 AF98-198
Adapter for AR30 and DR30	**AR9Y003** Mount this adapter onto a 22mm dia. command switch with a square button and a square bezel to obtain a 30mm dia. command switch with a square/round button and a square bezel. A resin ring-packing and a nut are accessories of the adapter. Dimensions, mm: 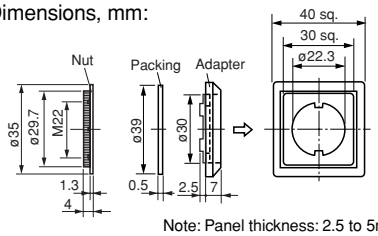 AF95-416 Note: Panel thickness: 2.5 to 5mm

Description	Type
Round-frame adapter for 30mm dia. types	**AR9Y004** By using this adapter in combination with the round type 22mm dia. command switch, the 22mm dia. command switch can be used as a 30mm dia. command switch/round frame type. Used with: AR22, DR22 round types (except for M3R, M8R,VG□, Joy stick selectors, buzzers) Dimensions, mm 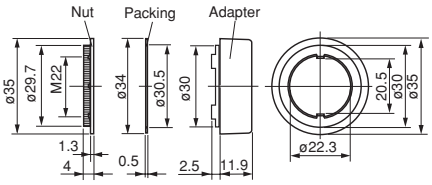 KK02-100A Note: Panel thickness: 2.5 to 5mm
Round-frame adapter for 30mm dia. type VG	**AHX958** Using this adapter in combination with model AR22VG (22mm dia.) allows mounting to a 30.5mm panel cutout hole. The attachment method is as follows. • The washer and nut (22.3mm dia.) originally attached to the operator will not be used, so remove them. • Attach the 22mm dia. packing (included), the 30mm dia. adapter and the 30mm dia. packing to the operator in that order, and insert the operator into the cutout hole. • From the back of the panel cutout hole, fasten the 30mm-dia. nut using the AHX701 wrench. The correct tightening torque is 1 to 1.5 N•m. 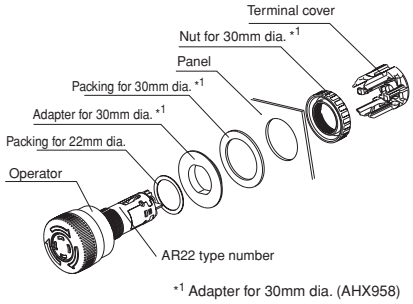 *1 Adapter for 30mm dia. (AHX958) Panel cutout, mm: 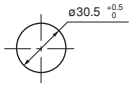 Dimensions, mm: 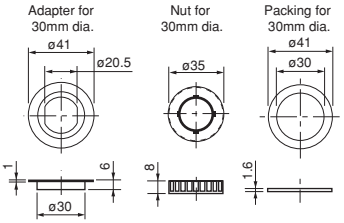 AF93-4 Note: Panel thickness: 1 to 6mm

Description	Type
Legend plate for AR22	**AR9P711-**①②③ ① Color B: Black A: Aluminum This aluminum legend plate is for a 22.3mm dia. panel cutout hole. (Packing provided)

SI-1033

Legend	Code ②	Code ③
Blank	0	0
ON	0	A
OFF	0	B
START	0	C
STOP	0	D
OFF-ON	2	A

Dimensions, mm:

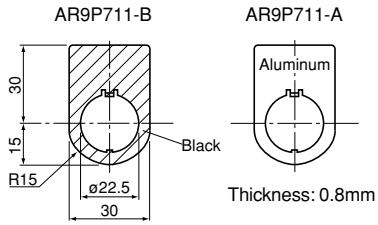

Description	Type
Legend plate for AR22	**AR9P712-**①②③ ① Color B: Black A: Partially black This aluminum legend plate is for a 22.3mm dia. panel cutout hole. (Packing provided)

SI-1032

Legend	Code ②	Code ③
Blank	0	0
ON	0	A
OFF	0	B
START	0	C
STOP	0	D
OFF-ON	2	A

Dimensions, mm:

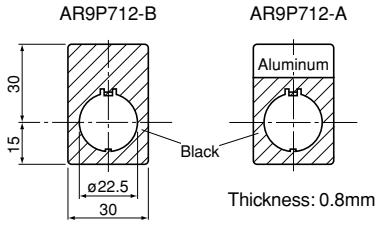

Description	Type
Legend plate for AR22	**AR9P713-**①②③ ① Color B: Black A: Partially black This aluminum legend plate is for a 22.3mm dia. panel cutout hole. (Packing provided)

AF95-114

Legend	Code ②	Code ③
Blank	0	0
ON	0	A
OFF	0	B
START	0	C
STOP	0	D
OFF-ON	2	A

Dimensions, mm:

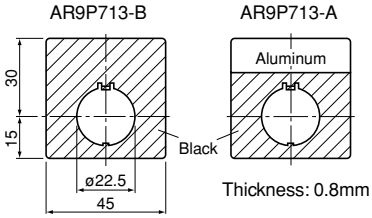

Description	Type
Legend plate for AR22 emergency stop	**AR9P719-**①② Plate color: Yellow Letter color: Black This aluminum legend plate is for a 22.3mm dia. panel cutout hole. (Packing provided)

KK02-265A

Legend	Code ①	Code ②	Letter hight
Blank	0	0	–
EMERGENCY STOP	5	A	7mm
	5	B	13mm
EMERGENCY OFF	5	C	13mm

Dimensions, mm:

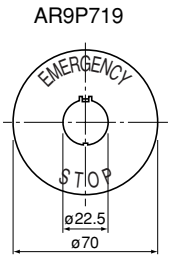

Thickness: 0.8mm

Note: Engraving for making letters is not available.

04

Description	Type
Legend plate for AR22 (width: 34mm)	**AR9P015-B**①② : Hight 36mm **AR9P014-B**①② : Hight 40.3mm Color: black

Legend	code ①	②
Blank	0	0
ON	0	A
OFF	0	B
START	0	C
STOP	0	D
OFF-ON	2	A

.AF96-190

Optimal for use in combination with a 3-position selector switch.
Legend plates are available in two types: short, 36 mm; and long, 40.3mm.

Dimensions, mm:

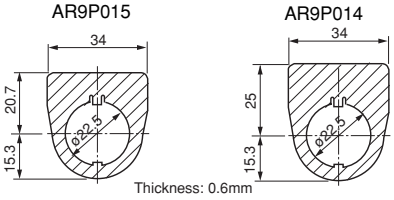

Description	Type
Legend plate with name plate for AR22	Legend plate **AR9P009-B** Name plate **AR9P010-B** ①② (34 × 8mm) Legend plate **AR9P011-B** Name plate **AR9P012-B** ①② (34 × 13mm) Legend plate **AR9P007-B** Name plate **AR9P008-B** ①② (27 × 16mm)

Name plate	Code ①	②
ON	0	A
OFF	0	B
START	0	C
STOP	0	D
OFF-ON	2	A

.AF96-190

Dimensions, mm:

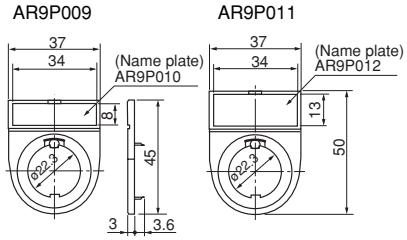

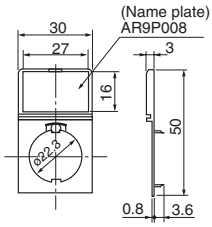

Description	Type
Legend plate for AR30	**AHX177-**①②③④ ① Material and color This legend plate is for a 30.5mm dia. panel cutout hole.

Code	Material	Color
S	Brass	Silver
B	Aluminum	Black
A		Aluminum

Y-1545

② Size
H: Standard
S: Short size

Legend	Code ③	④
Blank	0	0
ON	0	A
OFF	0	B
START	0	C
STOP	0	D
OFF-ON	2	A

AF89-466

Dimensions, mm:

AF87-49

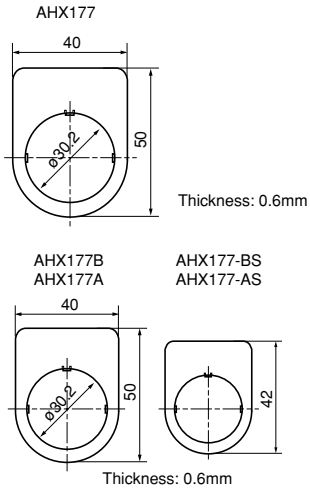

Description	Type
Legend plate for AR30 emergency stop	**AHX720-**①② Plate color: Yellow Letter color: Black This aluminum legend plate is for a 30.5mm dia. panel cutout hole.

Legend	Code ①	②	Letter hight
Blank	0	0	–
EMERGENCY STOP	5	A	7mm

SK-598

Dimensions, mm:

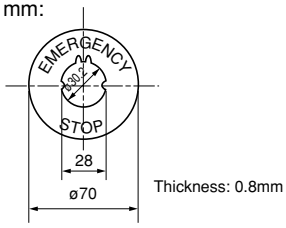

Note: Engraving for making letters is not available.

Description	Type
Panel plug for AR22 and DR22 SI-1027	Round: **AHX725-B** Black **AHX725-H** Gray Square: **AHX726-B** Black **AHX726-H** Gray Dimensions, mm: ø29.5 x 17 (AHX725) 29.5 sq. x 17 (AHX726) Use this plug to cover up unused panel cutout holes. For oil proof usage, use together with packing (AR9Y730) and a nut (AR9R744).
Panel plug for AR30 and DR30 T-1993	**AHX004** Color: Silver (metal) This plug is used to cover up unused panel cutout hole. Dimensions, mm: 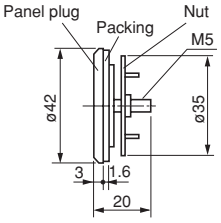

Description	Type
Group panel for 22mm dia. type AF97-233	**DR9Y004** These new 22mm dia. command switch/ square types can be neatly aligned side by side on this group panel at a 30mm pitch to form a uniform panel face with no misalignment between mounted switches. Depending on the number of switches to be grouped (maximum 12), the panel can be divided (by cutting at the portion indicated by an asterisk (*)). Mounting, mm: (example showing a group of three) 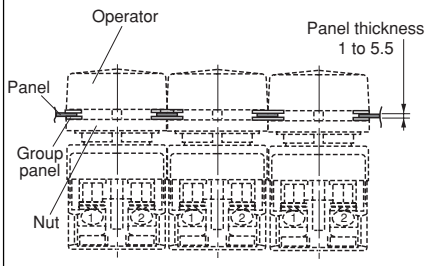 Dimensions, mm: 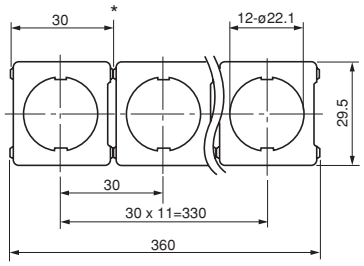 Thickness: 0.8mm
Jumper AF95-153 AF95-27	**APCX029** (For pilot light without transformer) **DR9Y001** (For pilot light with transformer) Use this jumper to connect terminals allocated in a 30mm pich. Rated current is 3A Dimensions, mm APCX029 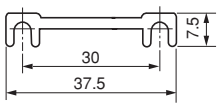 DR9Y001 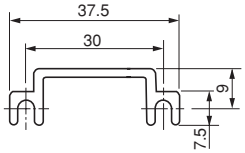 Thickness: 0.5mm

AR22/DR22 and AR30/DR30 Accessories

Lens for illuminated pushbutton switch and pilot lights

AF94-458

Type	Used with
AR9C011-□[*1]	AR22F0L, F5L, F0P, F5P
AR9C012-□[*1]	AR22E0L, E5L, E0P, E5P AR22G1L, G2L, G4L, G6L, G7L, G9L DR22E3L, E3P AR30E0L, E5L, G2L, G3L, G4L, G7L, G8L, G9L DR30E3L
AR9C013-□[*1]	AR22F0M, F5M
AR9C014-□[*1]	AR22E0M, E5M DR22E3M, F5M
AR9C015-□	AR22M4L, M4P
AR9C016-□	AR22M0L, M5L
DR9C001-□	DR22D0L DR30D0L*[2]
DR9C002-□	DR22K0L DR30K0L*[2]
DR9C120-C	DR30M4M
DR9C121-C	DR30F4N
DR9C122-C	DR30F4M
DR9C126-□[*1]	DR22F3M
DR9C126-C	DR22F4M
DR9C127-□[*1]	DR22E3N

Replace the □ mark by the lens color code

Color	Green	Red	Clear	Yellow
Code	G	R	C	Y

Color	Orange	Blue	White
Code	A	S	W

Notes: *1 When the main unit code is "W" (white), use a lens of clear color.
*2 Except for pilot lights with resistor

Button for pushbutton switch

AF94-461

KK02-101A

KK02-102A

KK02-103A

Type	Used with
AR9C001-□	AR22F0R, F5R, F0Y, F5Y, G2R, G7R AR30F0R, F5R, FVR AR22S1R, S2R, S3R, S6R AR30S1R, S2R, S3R, S6R
AR9C003-□	AR22E0R, E5R, G0R, G3R, G5R, G8R AR22E0Y, E5Y AR30E0R, E5R, G0R, G1R, G5R, G6R
AR9C004-□	AR22F0S, F5S
AR9C005-□	AR22E0S, E5S
AR9C006-□	AR22M4R, M9R, M4Y AR30M4R
AR9C007-□	AR22M0R, M5R AR30M0R, M3R, M5R, M8R
AR9C024-□	AR30B0R, B1R, B2R, B3R
AR9C027-C	AR22FAR, FBR, AR30FAR, FBR
AR9C028-C	AR22EAR, EBR, AR30EAR, EBR
AR9C041-R	AR30N0R
AHX539-1	Cap for AR30FVR

Replace the □ mark by the button color code

Color	Green	Red	Black	White
Code	G	R	B	W

Color	Yellow	Orange	Blue
Code	Y	A	S

Center button (For V type)

AF95-32

Type	Used with
AR9C020-R	AR22V0R, V2R, VSR AR30V0R, V2R
AR9C020-□	AR22V5R, AR30V5R
AR9C018-R	AR22V0L, V2L, VDL, VAL, VSL AR30V0L, V2L
AR9C018-□	AR22V5L*, AR30V5L*

Replace the □ mark by the button color code

Color	Red	Black	Yellow
Code	R	B	Y

Note: * V5L: Red and yellow only

Push-lock, turn-reset button (V and Q types)

AF95-31

KK02-104A

Type	Used with
AR9C008-R	AR22V4R
AR9C010-R	AR22Q2R, AR30Q2R
AR9C017-R	AR22V2R, V2L, AR30V2R, V2L
AR9C019-R	AR22VAL
AR9C021-R	AR22V0R, V0L, AR30V0R, V0L
AR9C021-□	AR22V5R, V5L*, AR30V5R, V5L*
AR9C026-R	AR22VDL
AR9C029-R	AR30V1R
AR9C040-R	AR22VSR, VSL

Replace the □ mark by the button color code

Color	Red	Black	Yellow
Code	R	B	Y

Note: * V5L: Red and yellow only

Knob

AF95-43

Type	Used with
AR9M006-□	AR22PR, PCR, PY, PCY AR30PR, PCR

Replace the □ mark by the knob color code

Color	Black	Green	Red
Code	B	G	R

Lever

AF95-42

Type	Used with
AR9M007-□	AR22WR, WCR, WY, WCY AR30WR, WCR

Replace the □ mark by the lever color code

Color	Black	Green	Red
Code	B	G	R

Cylindrical knob

AF95-44

Type	Used with
AR9M008-□	AR22RR, RCR, RY, RCY

Replace the □ mark by the knob color code

Color	Black	Green	Red
Code	B	G	R

Description	Type
Knob (for illuminated selector switch) AF94-465	Type / Used with **AR9M005-□** AR22PL, PP AR30PL Replace the □ mark by the knob color code Color: Green, Red, White Code: G, R, W Color: Yellow, Orange, Blue Code: Y, A, S
Key AF94-464	Type / Used with **AR9C022-□** AR22JR, JCR, AR30JR, JCR, **AR9C025-□** AR22JAR, AR30JAR Replace the □ mark by the key type code. Code: A, B, C, D, E or F, 6 types.
Legend plate (for F type with round bezel) AF94-459	**AR9P001-W** This part is made of acrylic resin. Use paint or thinner compatible with resin. Dimensions, mm: ø17.8 x 0.9
Legend plate (for E type with round bezel) AF94-459	**AR9P002-W** This part is made of acrylic resin. Use paint or thinner compatible with resin. Dimensions, mm: ø19.7 x 4.2
Symbol mark plate AF98-197	Type / Used with **AR9P019-□□■** AR22FAR, FBR, AR30FAR, FBR **AR9P020-□□■** AR22EAR, EBR, AR30EAR, EBR □□■:

Symbol	○		I		Ⓣ		○	I	Ⓣ
Plate	W	B	W	B	W	B	Clear		
Symbol	Red		Green		Green		Black		
Code	01	02	03	04	11	12	02B	04B	12B

W: White, B: black

Description	Type
Legend plate and color plate (for F type with square bezel) AF94-460 KK02-105A KK02-106A KK02-107A	• Legend plate Type / Used with **DR9P241-W** AR22F0M, F5M DR22F3M, F4M **DR9P242-WP** DR30M4M **DR9P242-W** DR30M4M, LED(W) **DR9P243-WP** DR30F4N **DR9P243-W** DR30F4N, LED(W) **DR9P244-WP** DR30F4M **DR9P244-W** DR30F4M, LED(W) Types DR9P242, 243 and 244-W are LED illuminated, and used exclusively with operators having a "W" in the type number. • color plate Type / Used with **DR9P241-□** DR22F3M, F4M **DR9P242-□** DR30M4M **DR9P243-□** DR30F4N **DR9P244-□** DR30F4M Replace the □ mark by the color code Color: Green, Red, White Code: G, R, W Color: Yellow, Orange, Blue Code: Y, A, S This part is made of acrylic resin. Use paint or thinner compatible with resin. Dimensions, mm: DR9P241: 20.8 sq. x 0.8 DR9P242: 33.4 sq. x 1 DR9P243: 33.4 x 27.4 x 1 DR9P244: 27.4 sq. x 1
Legend plate (for E type with square bezel) AF94-460 AF94-460	Type / Used with **AR9P003-W** AR22E0M, E5M DR22F5M, E3M **DR9P001-W** DR22E3N This part is made of acrylic resin. Use paint or thinner compatible with resin. Dimensions, mm: AR9P003-W: 20 sq. x 4.8 DR9P001-W: 19.7 x 26.7 x 4.5
Legend sheet AF95-34	**AHX727** Affix this seal to the DR9P241-□/AR9P003 legend plate for marking or labeling. Dimensions, mm: 20 sq. x 0.025

04

Description	Type

LED lamp

KK02-109A

Type	Lamp voltage
APX510-6 □	6V AC
APX510-D6 □	6V DC
APX510-12 □	12V AC/DC
APX510-15 □	15V AC/DC
APX510-24 □	24V AC/DC

Replace the □ mark by the luminous color code

Luminous color	Yellow	Red	Green
Code	Y	R	G
Lens color	Y	R	G

Luminous color	Amber	Orange	Blue
Code	A	O	S
Lens color	A	W, A*	S

* Orange is available only for the DR22F4M pilot light.

Dimensions, mm:

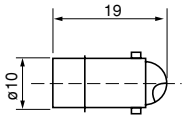

Lamp base: BA9s/13

LED lamp (for DR30 with resistor)

KK02-110A

KK02-111A

Type	Lamp voltage
APX507-24 □ **APX509-24O**	24V AC/DC

Note:
The symbol in the box indicates the color of light emitted. (See note APX510.)
When the code is "W" (white), use an LED lamp ((APX.509-24O)

Dimensions, mm:

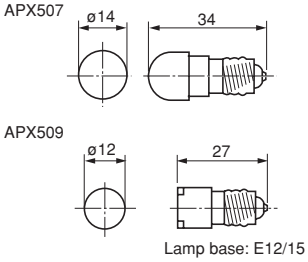

Lamp base: E12/15

LED lamp (for AR22VGF type)

KK02-109A

Type	Lamp voltage
AR9L002-ER	24V AC/DC

Luminous color: Red

Dimensions, mm:

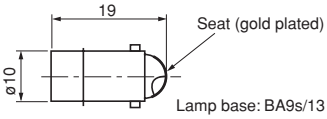

Lamp base: BA9s/13

Do not use the LED lamp for other types.

Description	Type

Neon lamp (for AR22VGF type)

KK03-038

Type	Lamp voltage
AR9N001-HA	110V AC
AR9N001-KA	120V AC
AR9N001-MA	220V AC
AR9N001-PA	240V AC

Luminous color: Orange

Dimensions, mm:

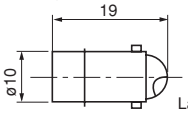

Lamp base: BA9s/13

Do not use the LED lamp for other types.

LED unit for DR30 (square type)

KK02-112A

.KK02-113A

Type	Lamp voltage	Used with
DR9Q001-6 □	6V DC	DR30M4M
DR9Q001-2 □	12V AC	
DR9Q001-B □	12V AC/DC	
DR9Q001-E □	24V AC/DC	
DR9Q002-6 □	6V DC	DR30F4N
DR9Q002-2 □	12V AC	
DR9Q002-B □	12V AC/DC	
DR9Q002-E □	24V AC/DC	
DR9Q003-6 □	6V DC	DR30F4M
DR9Q003-2 □	12V AC	
DR9Q003-B □	12V AC/DC	
DR9Q003-E □	24V AC/DC	

Replace the □ mark by the luminous color code

Luminous color	Yellow	Red	Orange	Amber
Code	Y	R	O	A
Lens color	G, Y	R	W	A

Dimensions, mm:

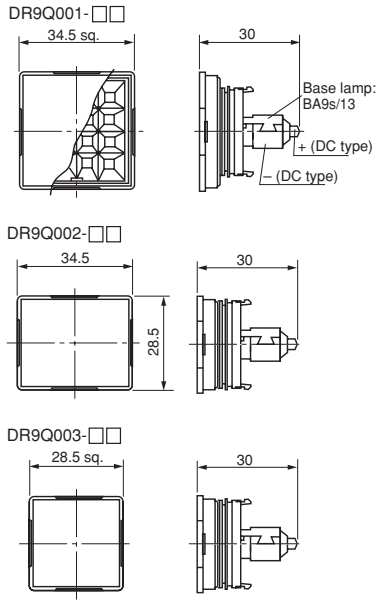

Incandescent lamp

AF89-427

Type	Lamp voltage	Rated voltage, consumption
AHX135	5.5V AC/DC	6.3V AC/DC, 1W
AHX279	15V AC/DC	18V AC/DC, 1W
AHX144	20V AC/DC	24V AC/DC, 1W
AHX129	24V AC/DC	30V AC/DC, 1W

Dimensions, mm:

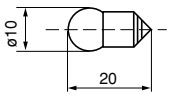

Lamp base: BA9s/13

Incandescent lamp (for DR30 with resistor)

KK02-115A

Type	Lamp voltage	Rated voltage, consumption
AHX130	15V AC/DC	18V AC/DC, 2W

Dimensions, mm:

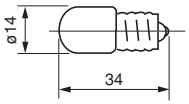

Lamp base: E12/15

Contact block (1NO)

AF94-455

AR9B290 Standard
AR9B290-S Overlap

Color: Blue
Dimensions, mm: 19.3 x 29 x 27

Note: Terminal cover is not supplied with this.

Contact block (1NC)

AF94-455

AR9B291 Standard
AR9B291-S Overlap

Color: Red
Dimensions, mm: 19.3 x 29 x 27

Note: Terminal cover is not supplied with this.

Lamp terminal

AF94-456

AR9B292

Color: Black
Dimensions, mm: 19.3 x 29 x 27

Note: Terminal cover is not supplied with this.

Contact protection cover

KK02-117A

KK02-118A

Type	Used with *
AR9D001-1	AR22, 1-step contact
AR9D001-2	AR22, 2-step contact
AR9D002-1	AR30, 1-step contact
AR9D002-2	AR30, 2-step contact

- The contact is covered with a silicon rubber cover to keep out foreign matter such as dust, etc.
- Section A of the AR9D001 is separate.

* *See page 04/124*, "AR22 □ Z8, AR30 □ Z8"

Dimensions, mm:

AR9D001-1

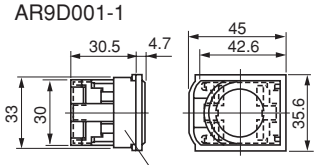

AR9D001-2

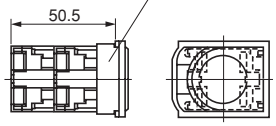

AR9D002-1

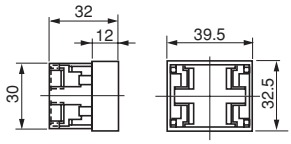

AR9D002-2

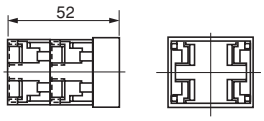

Transformer unit

AF94-457

AF95-33

Type	Primary voltage	Used with
AR9T511-H	100-110V AC	Standard type (except buzzers)
AR9T511-L	115-127V AC	
AR9T511-M	200-220V AC	
AR9T511-Q	230-254V AC	
AR9T511-S	350-380V AC	
AR9T511-T	400-440V AC	
AR9T511-V	480V AC	
AR9T511-W	500-550V AC	
AR9T557-H	100-110V AC	DR30F4N, F4M, M4M
AR9T557-L	115-127V AC	
AR9T557-M	200-220V AC	
AR9T557-Q	230-254V AC	
AR9T557-S	350-380V AC	
AR9T557-T	400-440V AC	
AR9T557-V	480V AC	
AR9T557-W	500-550V AC	

Dimensions, mm:
Up to 220 V 22.4 x 30 x 45
Over 220 V 25.3 x 29 x 48

Note: With terminal cover

Description	Type
Base unit for transformer separate mounting KK02-118A	**AR9T003** Use this base in combination with a transformer unit. This base unit can be mounted using screws or rails. Dimensions, mm 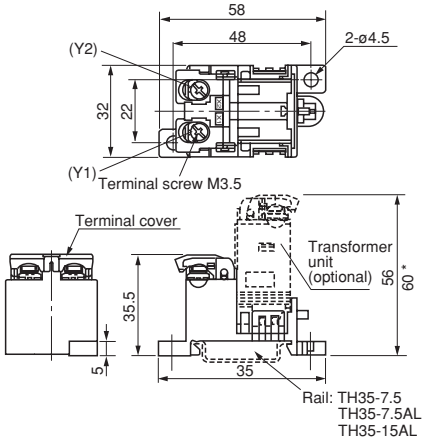 * Except for the types 110V AC, 127V AC and 220V AC.
Resistor Voltage stabilizer Device for LED lamp flickering AF95-33	Resistor: **AR9T519-H** (110V DC) Fit this resistor when using LED of 24V DC rating with 110V DC power. Voltage stabilizer: **AR9T001-E** This unit allows an LED lamp of 24V DC rating to be used in a circuit with voltage from 27V to 35V (AC or DC). Flickering device: 6V AC: **AR9T002-A** 6V DC: **AR9T002-6** 12 to 24V AC: **AR9T002-G** * 12 to 24V DC: **AR9T002-E** * * Used in combination with 12V, 15V, or 24V rated LED lamp. Note: With terminal cover
Nut AF94-462 KK2-119A	Type / Used with / Dimensions, mm **AR9R744** — AR22, DR22* — ø29.7 x 4 **DR9R001** — DR30F4M, DR30F4N, DR30M4M — ø33.8 x 5 * Except AR22VG□, Joy stick selectors, buzzers and numerical indicators

Description	Type
Nut for 30mm dia. types (Resin types are black, metallic types are silver.) KK2-120A KK2-121A KK2-122A KK2-123A	**AR9R001:** Resin types are black (standard) **AHX088:** Metallic types are silver Used with: AR30F0R, F5R, FAR, FBR, E0R, E5R, EAR, EBR, E0L, E5L, Q7L DR30D0L, E3L, K0L **AR9R002:** Resin types are black (standard) **AHX093 :** Metallic types are silver Used with: AR30M0R, M5R, M4R, G0R, G5R, N0R, S□R, V□R, Q2R, V□L, PR, PCR, WR, WCR, JR, JCR, JAR, PL, A□N, A□H
Water-tight cap for 22mm dia. types KK2-124A	**AR9D797-□** This rubber cap protects the operator and switch mechanism against dust and water. Use this cap in a dusty or moist environment. Used with: AR22E0L,E5L AR22E0R, E5R Replace the □ mark by the luminous color code. Code / Color G — Green R — Red B — Black Y — Yellow Blank — Clear (standard) Dimensions, mm: 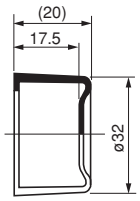
Water-tight cap for 30mm dia. types Y-1559	**AHX052** This rubber cap protects the operator and switch mechanism against dust and water. Use this cap in a dusty or moist environment. The only color available is transparent. Used with: AR30E□R, E□L Dimensions, mm: ø36 x 22.5

Dust-proof cap for 30mm dia. types

SC-993

AF89-772

Type	Color	Used with	Spec.
AHX032	Red	AR30E0R	Oil-proof
AHX033	Green		
AHX034	Black		
AHX041	Red	AR30F0R	Oil-proof
AHX042	Green		
AHX043	Black		
AHX157-R	Red	AR30B2R, B3R	Oil-proof
AHX157-G	Green		
AHX157-B	Black		
AHX113-R	Red	AR30E0R	Weather resistance
AHX113-G	Green		
AHX113-B	Black		
AHX111-R	Red	AR30F0R	Weather resistance
AHX111-G	Green		
AHX111-B	Black		

Dimensions, mm:

AHX032 to 034, 041 to 043
AHX111, 113

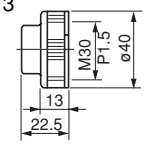

AHX157

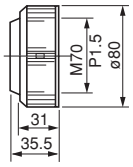

Used for sealing the operator from foreign debris such as dust, oil (oil-proof), and water (weather resistance) in environments where the unit is in contact with such elements.

Packing

AF94-462

KK2-125A

AR9Y730:
AR22 and DR22 (Rubber)

Note: Except for joystick selector switches, buzzers

AHX282:
AR30 and DR30 (Resin-standerd)

Note: Except for DR30F4M, F4N, M4M, numerical indicators

AHX149:
AR30 and DR30 (Rubber)

Note: Except for DR30F4M, F4N, M4M, numerical indicators

Terminal cover

AF94-466

KK2-126A

Type	Used with	Dimensions, mm
AR9Y305	Contact unit Lamp terminal Transformer unit *1	18.4 x 29 x 8.4
DR9Y320	Pilot lights *2 (without transformer)	ø22 x 5.8
DR9Y321	DR30F4M, F4N, M4M (without transformer)	34 sq. x 8.7

*1 Applicable up to 220V.
*2 DR22D0L, E3L, K0L, F□M, E3M, E3N, E3P, DR30D0L, E3L, K0L

The terminal cover is provided as standard with the applicable types listed above. (Except for joy stick selector switches, numerical indicators, pilot lights with resistors, contact block alone and lamp terminal alone)

Terminal cover

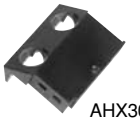

AHX305

SG-842

AHX426

AF92-339

AHX376

SG-5

Type	Used with	Dimensions, mm
AHX305	Buzzers (without transformer)	23.5 x 27.5 x 16
AHX426	DR30D1L (without transformer)	27.5 x 31 x 8
AHX376	DR30D1L (with transformer) Buzzers (B0 type) With transformer * With short-body transformer With resistor unit	13 x 29 x 6.5

* 230V and over

The terminal cover is provided as standard with the applicable types listed above.

Products equipped with contact protection cover

■ Features
A silicon rubber cover is provided for the contact block to keep out foreign matter such as dust, etc.
Other ratings and specifications are the same as those of the standard type.

■ Type
AR22 □ Z8
AR30 □ Z8
Specify “Z8” at the end of the type number of the standard type.

■ Dimensions
The only thing different from the standard product is the addition of a 1-mm thick silicon rubber cover around the contact block.

■ Applicable types

Type	Contact arrangement	Remarks
• Pushbuttons *1 • Emergency stop pushbuttons *2 • Selectors	1NO+1NC, 2NO*4, 2NC	For use with a 1-step contact
	1NO+3NC, 2NO+2NC, 3NO+1NC, 4NO*4, 4NC	For use with a 2-step contact
• Illuminated pushbuttons *3 (without transformer)	1NO*5, 1NC	For use with a 1-step contact
• Emergency stop illuminated pushbuttons*2 (without transformer) • Illuminated selectors (without transformer)	1NO+2NC, 2NO+1NC, 3NO*5, 3NC	For use with a 2-step contact

Notes: *1 Except for AR30B0R, B1R, B2R, B3R, N0R, and GPR.
*2 Except for unibody (VG types)
*3 Except for AR30Q7L
*4 Except for emergency stop pushbutton switch
*5 Except for emergency stop illuminated pushbutton switch

Resisting water-soluble cutting oils and heat

■ Features
Safer operation in environments exposed to water-miscible cutting fluids, machining oils, lubricating oils, cleaning oils and high humidity (up to 95%) is made possible by using materials that protect against rust and corrosion of components.
Other ratings and specifications are the same as those of the standard type.

■ Type
AR22 □ Z9, DR22 □ Z9
AR30 □ Z9, DR30 □ Z9
Specify “Z9” at the end of the type number of the standard type.

■ Dimensions
Same as those of the standard type

■ Applicable types
• AR22, DR22 series
AR 22 (Except for joy stick selectors and VG types)
DR22 (Except for pilot lights with resistor unit, buzzers, and numerical indicators)

• AR30, DR30 series
AR30 (Except for Q7L types and joy stick selectors)
DR30 (Except for D1L, F4M, F4N, M4M types, pilot lights with resistor/resistor unit, buzzers, and numerical indicators)

Meeting IP2X finger protection standards

■ Features
Conforms to EN standard EN60204-1 (protecting against electric shock). The terminal has IEC60529 degree of protection; IP2X finger protection secured (a mock human finger used in testing did not come into contact with charged parts). The contact block and lamp terminal can be easily mounted or removed with the terminal cover mounted.

■ Type
AR22 □ ZB, DR22 □ ZB
AR30 □ ZB, DR30 □ ZB
Specify "ZB" at the end of the type number of the standard type.

■ Accessories
• Contact block (plus terminal cover)
NO contact: AR9B290-D
NC contact: AR9B291-D
•Transformer unit (plus terminal cover)
AR9T511-□ D

■ Ratings and specifications
• Protection degree: IP2X
• Terminal screw: M3.5
Wiring can be done with a solid wire or fork shaped crimp terminal.

Note: Ring-type crimp terminals cannot be used.

• Other ratings and specifications are the same as those of the standard type.

■ Applicable types
• AR22, DR22 series
AR22 (except for joy stick selectors)
DR22: Without transformer, with transformer (except for short-body types, buzzers and numerical indicators)

• AR30, DR30 series
AR30 (except for joy stick selectors)
DR30: Without transformer, with transformer (except for D1L, short-body types, F4M, F4N, M4M types, buzzers and numerical indicators)

Note: The terminal of the standard type VG has IP2X protection.

■ Dimensions, mm

AR22/Pushbutton switches

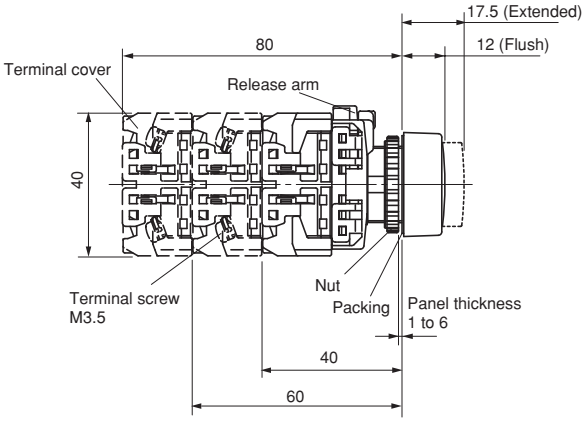

DR22/Without transformer

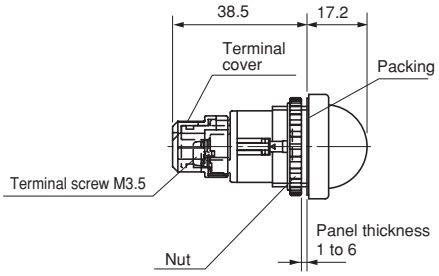

DR22/With transformer

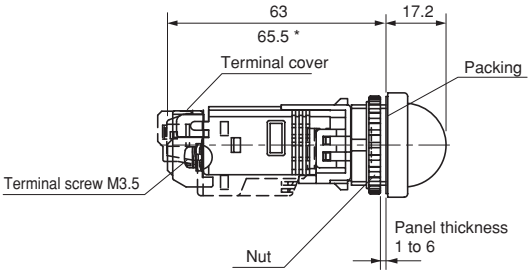

Note: * Except for the types 110V AC, 127V AC and 220V AC.

04

Metal nut (chrome plated) types

■ Features
The nut is a metallic ring (chrome plated).
Other ratings and specifications are the same as those of the standard model.

■ Type
AR30 □ ZM
DR30 □ ZM
Specify "ZM" at the end of the type number of the standard type.

■ Dimensions, mm
Same as those of the standard types.

■ Applicable types
• AR30, DR30 series
AR30 (except for G4L, G9L, GSR*1, GPR*1, and B0R*1 types)
DR30 with round bezel (except for IP54 buzzer type B8)*2

Notes: *1 Standard type is a metallic ring (chrome plated).
*2 The nut of types DR30B0, B5 and B6 buzzers are resin (chrome plated).

KK02-147A
AR30E0R □ ZM

KK02-148A
AR30PR □ ZM

KK02-149A
DR30D0L □ ZM

Resisting sulfuration gas

■ Features
These products can be used in environments having a concentration of hydrogen sulfide gas of 0.5 ppm or less.
The metallic parts have been subjected to an anti-corrosion treatment (see note).
The contacts of the AR series are gold plated.

Note: The body is made of resin and cannot be used with gases that affect resins (plastics).

■ Type
AR22 □ Z4, DR22 □ Z4
AR30 □ Z4, DR30 □ Z4
Specify "Z4" at the end of the type number of the standard type.

■ Notes on use
• This product is resistant to light corrosive gas exposure.
• Other measures, such as covering the entire switch with a box, and the degree of protection of the panel should be taken into consideration.

■ Ratings and specifications
Hydrogen sulfide gas concentration of 0.5 ppm max.
Ambient storage temperature: 8 to 37°C
Humidity: 62 to 81%
Other ratings and specifications are the same as those of the standard type.

■ Dimensions, mm
Same as those of the standard types.

■ Applicable types
• AR22, DR22 series
AR22 (except for Joy stick selectors and VG type)
DR22 (except for pilot lights with resistor unit, buzzers, and numerical indicators)

• AR30, DR30 series
AR30 (except for Joy stick selectors)
DR30 (except for F4M, F4N, M4M types, pilot lights with resistor/resistor unit, buzzers and numerical indicators)

■ Mass, gram

● Illuminated pushbuttons

Type	Without transformer			With transformer *	
	1NO (1NC)	2NO (2NC) (1NO+1NC)	2NO+2NC	1NO (1NC)	2NO (2NC) (1NO+1NC)
AR22F0L	39	48	67	85	94
F5L	39	48	–	85	94
F0M, F0P	40	49	68	86	95
F5M, F5P	40	49	–	86	95
E0L	41	50	69	87	96
E5L	41	50	–	87	96
E0M, E0P, M4L, G1L, G2L, G4L	42	51	70	88	97
E5M, E5P, M9L, G6L, G7L, G9L	42	51	–	88	97
M4P	43	52	71	89	98
M0L	44	53	72	90	99
M5L	44	53	–	90	99
V5L	48	57	–	94	103

Note: * 230V and over : +17grams

● Pushbuttons

Type	1NO (1NC)	2NO (2NC) (1NO+1NC)	2NO+2NC
AR22F0R, FAR, F5R, FBR	27	36	55
E0R, EAR, F0S, F0Y, G0R E5R, EBR, F5S, F5Y, G5R	28	37	56
E0S, E0Y, M4R, G2R E5S, E5Y, M9R, G7R	29	38	57
M0R, M5R	31	40	59
S1R, S2R, S3R, S6R	–	43	62
M3R, M8R	44	53	72
V5R	49	58	77

● Emergency stop pushbuttons

Type	1NC	2NC (1NO+1NC)	2NO+2NC
AR22VSR	34	43	62
V0R, V4R	36	45	64
Q2R	36	45	–
V2R	38	47	66
V7R	61	70	89
VGE	61	65	–

● Emergency stop illuminated pushbuttons

Type	Without transformer		With transformer *	
	1NC	2NC (1NO+1NC)	1NC	2NC (1NO+1NC)
AR22VSL, VDL	48	57	94	103
V0L	49	58	95	104
VAL	50	59	96	105
V2L	51	60	97	106
VGF	66	70	–	–

Note: * 230V and over : +17grams

AR22 and DR22
Mass

■ Mass, gram

● Pilot lights

Type	Without transformer Standard	Without transformer Short-body	With transformer Standard *	With transformer Short-body	With resistor unit
DR22D0L, K0L	18	23	70	68	32
E3L, E3P, F3M, F4M	19	24	71	69	33
F5M	20	25	72	70	34
E3M	21	26	73	71	35
E3N	23	28	75	73	37

Note: * 230V and over : +17grams

● Selector switches

Type	1NO (1NC)	2NO (2NC) (1NO+1NC)	2NO+2NC
AR22PR	30	39	58
PCR	–	39	58
WR	31	40	59
WCR	–	40	59
RR, PY, WY	32	41	60
RCR, PCY, WCY	–	41	60
RY	33	42	61
RCY	–	42	61
JR, JAR	56	65	83
JCR	–	65	83
JY	57	66	84
JCY	–	66	84

● Illuminated selector switches

Type	Without transformer 1NO (1NC)	Without transformer 2NO (2NC) (1NO+1NC)	Without transformer 2NO+2NC	With transformer * 1NO (1NC)	With transformer * 2NO (2NC) (1NO+1NC)
AR22PL	42	51	70	88	97
PP	43	52	71	89	98

Note: * 230V and over : +17grams

● Joy stick selector switches

• Screw terminal types

Type	1NO x2	(1NO+1NC) x2	1NO x4	(1NO+1NC) x4
AR22A2N, A7N	89	99	116	136
A0N, A5N	99	109	126	146
A1N, A6N	112	122	139	159

• Solder/tab terminal types

Type	(1NO+1NC) x2	(2NO+2NC) x2	(1NO+1NC) x4	(2NO+2NC) x4
AR22A2H, A7H	72	75	82	88
A0H, A5H	82	85	92	98
A1H, A6H	95	98	105	111

● Buzzers

Type	Without transformer	With transformer	With resistor unit
DR22B5	50	105	52
B8	53	108	55
B3	66	121	–

● Numerical indicators

Type	Solder	Solder (with connector)	With right angle connector
DR22N1	53	62	55
N2	67	76	69

■ Mass, gram

● Illuminated pushbuttons

Type	Without transformer			With transformer *	
	1NO (1NC)	2NO (2NC) (1NO+1NC)	2NO+2NC	1NO (1NC)	2NO (2NC) (1NO+1NC)
AR30E0L	49	58	77	95	104
E5L	49	58	–	95	104
G4L	50	59	78	96	105
G9L	50	59	–	96	105
V5L	56	65	–	102	111
G2L	66	75	94	112	121
G7L	66	75	–	112	121
G3L	72	81	100	118	127
G8L	72	81	–	118	127
Q7L	–	159	–	–	205

Note: * 230V and over : +17grams

● Pushbuttons

Type	1NO (1NC)	2NO (2NC) (1NO+1NC)	2NO+2NC
AR30F0R, FAR, F5R, FBR	36	45	64
E0R, EAR, G0R, E5R, EBR, G5R	37	46	65
M4R	38	47	66
M0R, M5R	40	49	68
V5R	42	51	70
S1R, S2R, S3R, S6R	–	53	72
FVR	54	63	82
G1R, G6R	59	68	87
N0R	96	105	124
GPR	116	125	144
GSR, B0R	123	132	151
M3R, M8R	126	135	154
B1R	241	250	269
B3R	279	288	307
B2R	291	300	319

● Emergency stop pushbuttons

Type	1NC	2NC (1NO+1NC)	2NO+2NC
AR30V0R	43	52	71
Q2R	45	54	–
V2R	46	55	74
V1R	60	69	88

● Emergency stop illuminated pushbuttons

Type	Without transformer		With transformer *	
	1NC	2NC (1NO+1NC)	1NC	2NC (1NO+1NC)
AR30V0L	57	66	103	112
V2L	59	68	105	114

Note: * 230V and over : +17grams

AR30 and DR30
Mass

■ Mass, gram

● Pilot lights

• Without transformer type, With transformer type, With resistor unit type

Type		Without transformer Standard	With transformer Standard *1	Short-body	With resistor unit
DR30	D0L, K0L	28	80	78	42
	E3L	29	81	79	43
	F4M *2	32 (30)	84 (82)	–	46
	F4N *2	34 (30)	86 (82)	–	48
	M4M *2	37 (32)	88 (84)	–	50
	D1L	94	164	–	111

Notes: *1 230V and over : +17grams
*2 ( ): Incandescent lamp

• With resistor type

Type		50V DC	110V DC 220V DC
DR30	D0L, K0L (LED)	103	103
	D0L, K0L (incandescent)	107	179

● Selector switches

Type		1NO (1NC)	2NO (2NC) (1NO+1NC)	2NO+2NC
AR30	PR, WR	41	50	69
	PCR, WCR	–	50	69
	JR, JAR	67	76	94
	JCR	–	76	94

● Illuminated selector switches

Type		Without transformer			With transformer *	
		1NO (1NC)	2NO (2NC) (1NO+1NC)	2NO+2NC	1NO (1NC)	2NO (2NC) (1NO+1NC)
AR30	PL	52	61	80	98	107

Note: * 230V and over : +17grams

● Joy stick selector switches

• Screw terminal type

Type		1NO x2	(1NO+1NC) x2	1NO x4	(1NO+1NC) x4
AR30	A2N, A7N	100	110	127	147
	A0N, A5N	110	120	137	157
	A1N, A6N	124	134	151	171

• Solder/tab terminal type

Type		(1NO+1NC) x2	(2NO+2NC) x2	(1NO+1NC) x4	(2NO+2NC) x4
AR30	A2H, A7H	83	86	93	99
	A0H, A5H	93	96	103	109
	A1H, A6H	107	110	117	123

● Buzzers

Type		Without transformer	With transformer	With resistor unit
DR30	B5, B6	47	102	49 (Except B6)
	B8	48	103	50
	B0	86	–	–

● Numerical indicators

Type		Solder	Solder (with connector)	With right angle connector
DR30	N1	58	67	60
	N2	72	81	74