Distributed by:

JAMECO® ELECTRONICS

www.Jameco.com ✦ 1-800-831-4242

The content and copyrights of the attached material are the property of its owner.

Jameco Part Number 1729899

1.5A Low Dropout Positive Regulators Adjustable and Fixed 2.85V, 3.3V, 3.6V, 5V, 12V

FEATURES

- 3-Terminal Adjustable or Fixed 2.85V, 3.3V, 3.6V, 5V, 12V
- Output Current of 1.5A (0.5A for LT1086H)
- Operates Down to 1V Dropout
- Guaranteed Dropout Voltage at Multiple Current Levels
- Line Regulation: 0.015%
- Load Regulation: 0.1%
- 100% Thermal Limit Functional Test
- Ripple Rejection >75dB
- Available in 3-Pin TO-220 and 3-Pin DD Packages

APPLICATIONS

- SCSI-2 Active Terminator
- High Efficiency Linear Regulators
- Post Regulators for Switching Supplies
- Constant Current Regulators
- Battery Chargers
- Microprocessor Supply

DESCRIPTION

The LT®1086 is designed to provide up to 1.5A output current. All internal circuitry is designed to operate down to 1V input-to-output differential and the dropout voltage is fully specified as a function of load current. Dropout is guaranteed at several operating points up to a maximum of 1.5V at maximum output current. Dropout decreases at lower load currents. On-chip trimming adjusts the reference/ouput voltage to 1%. Current limit is also trimmed, minimizing the stress on both the regulator and power source circuitry under overload conditions.

The LT1086 is pin compatible with older 3-terminal adjustable regulators. A minimum 10µF output capacitor is required on these devices.

The LT1086 offers excellent line and load regulation specifications and ripple rejection exceeds 75dB even at the maximum load current of 1.5A. The LT1086 is floating architecture with a composite NPN output stage. All of the quiescent current and the drive current for the output stage flows to the load increasing efficiency.

The LT1086 is available in a 3-pin TO-220 package and a space-saving surface mountable 3-pin DD package.

LT, LTC and LT are registered trademarks of Linear Technology Corporation.

TYPICAL APPLICATION

5V to 3.3V Regulator

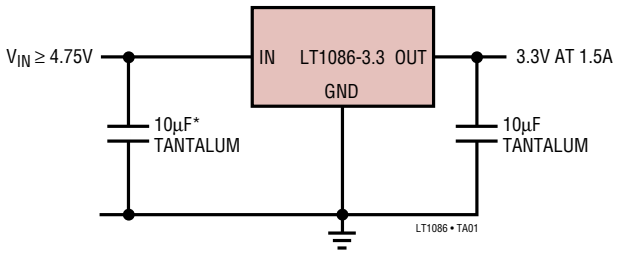

*MAY BE OMITTED IF INPUT SUPPLY IS WELL BYPASSED WITHIN 2" OF THE LT1086

LT1086 Dropout Voltage

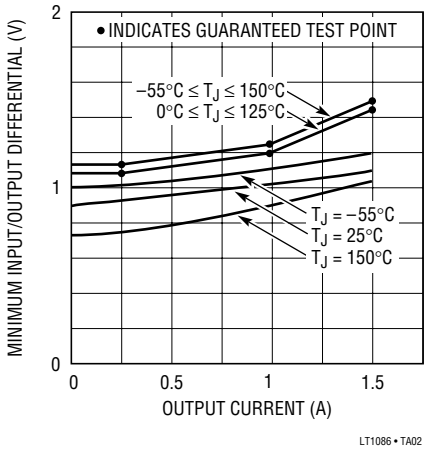

ABSOLUTE MAXIMUM RATINGS (Note 1)

Power Dissipation ..... Internally Limited
Input Voltage* 30V
Operating Input Voltage
  Adjustable Devices 25V
  2.85V Devices 18V
  3.3V, 3.6V, and 5V Devices 20V
  12V Devices 25V
Operating Junction Temperature Range
  "C" Grades
    Control Section ..... 0°C to 125°C
    Power Transistor ..... 0°C to 150°C
  "I" Grades
    Control Section ..... –40°C to 125°C
    Power Transistor ..... –40°C to 150°C
  "M" Grades
    Control Section ..... –55°C to 150°C
    Power Transistor ..... –55°C to 200°C
Storage Temperature Range ..... –65°C to 150°C
Lead Temperature (Soldering, 10 sec) ..... 300°C

* Although the device's maximum operating voltage is limited, (18V for a 2.85V device, 20V for a 5V device, and 25V for adjustable and12V devices) the devices are guaranteed to withstand transient input voltages up to 30V. For input voltages greater than the maximum operating input voltage some degradation of specifications will occur. For fixed voltage devices operating at input/output voltage differentials greater than 15V, a minimum external load of 5mA is required to maintain regulation.

PRECONDITIONING

100% Thermal Shutdown Functional Test.

PACKAGE/ORDER INFORMATION

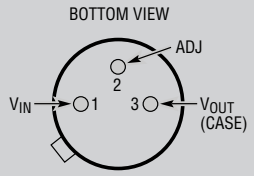

H PACKAGE
3-LEAD TO-39 METAL CAN
θ_{JA} = 150°C/W

ORDER PART NUMBER
LT1086CH LT1086MH

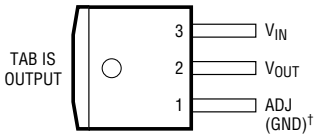

M PACKAGE
3-LEAD PLASTIC DD
θ_{JA} = 30°C/W**

** WITH PACKAGE SOLDERED TO 0.5IN^2 COPPER AREA OVER BACKSIDE GROUND PLANE OR INTERNAL POWER PLANE. θ_{JA} CAN VARY FROM 20°C/W TO >40°C/W DEPENDING ON MOUNTING TECHNIQUE.

ORDER PART NUMBER
LT1086CM LT1086CM-3.3 LT1086CM-3.6 LT1086IM LT1086IM-3.3

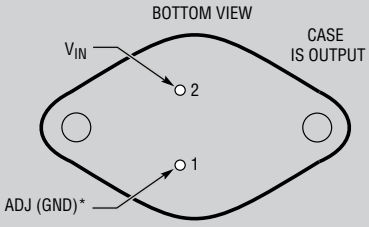

K PACKAGE
2-LEAD TO-3 METAL CAN
θ_{JA} = 35°C/W

ORDER PART NUMBER
LT1086CK LT1086CK-5 LT1086CK-12 LT1086IK LT1086IK-5 LT1086IK-12 LT1086MK LT1086MK-5 LT1086MK-12

OBSOLETE PACKAGES
Consider the T Package for Alternate Source

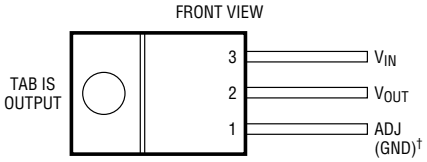

T PACKAGE
3-LEAD PLASTIC TO-220
θ_{JA} = 50°C/W

ORDER PART NUMBER
LT1086CT LT1086CT-2.85 LT1086CT-3.3 LT1086IT LT1086IT-5 LT1086IT-12 LT1086CT-3.6 LT1086CT-5 LT1086CT-12

†For fixed versions.
Consult LTC Marketing for parts specified with wider operating temperature ranges.

ELECTRICAL CHARACTERISTICS

The ● denotes the specifications which apply over the full operating temperature range, otherwise specifications are at T_A = 25°C.

PARAMETER	CONDITIONS			MIN	TYP	MAX	UNITS
Reference Voltage (Note 3)	LT1086, LT1086H	I_{OUT} = 10mA, T_J = 25°C, ($V_{IN} – V_{OUT}$) = 3V		1.238	1.250	1.262	V
		10mA ≤ I_{OUT} ≤ 1.5A, (0.5A for LT1086H), 1.5V ≤ ($V_{IN} – V_{OUT}$) ≤ 15V	●	1.225	1.250	1.270	V
Output Voltage (Note 3)	LT1086-2.85	I_{OUT} = 0mA, T_J = 25°C, V_{IN} = 5V		2.82	2.85	2.88	V
		0V ≤ I_{OUT} ≤ 1.5A, 4.35V ≤ V_{IN} ≤ 18V	●	2.79	2.85	2.91	V
	LT1086-3.3	V_{IN} = 5V, I_{OUT} = 0mA, T_J = 25°C		3.267	3.300	3.333	V
		4.75V ≤ V_{IN} ≤ 18V, 0V ≤ I_{OUT} ≤ 1.5A	●	3.235	3.300	3.365	V
	LT1086-3.6	V_{IN} = 5V, I_{OUT} = 0mA, T_J = 25°C		3.564	3.600	3.636	V
		5V ≤ V_{IN} ≤ 18V, 0 ≤ I_{OUT} ≤ 1.5A	●	3.500		3.672	V
		4.75V ≤ V_{IN} ≤ 18V, 0 ≤ I_{OUT} ≤ 1A, T_J ≥ 0°C		3.500		3.672	V
		V_{IN} = 4.75V, I_{OUT} = 1.5A, T_J ≥ 0°C		3.300		3.672	V
	LT1086-5	I_{OUT} = 0mA, T_J = 25°C, V_{IN} = 8V		4.950	5.000	5.050	V
		0 ≤ I_{OUT} ≤ 1.5A, 6.5V ≤ V_{IN} ≤ 20V	●	4.900	5.000	5.100	V
	LT1086-12	I_{OUT} = 0mA, T_J = 25°C, V_{IN} = 15V		11.880	12.000	12.120	V
		0 ≤ I_{OUT} ≤ 1.5A, 13.5V ≤ V_{IN} ≤ 25V	●	11.760	12.000	12.240	V
Line Regulation	LT1086, LT1086H	I_{LOAD} = 10mA, 1.5V ≤ ($V_{IN} – V_{OUT}$) ≤ 15V, T_J = 25°C			0.015	0.2	%
			●		0.035	0.2	%
	LT1086-2.85	I_{OUT} = 0mA, T_J = 25°C, 4.35V ≤ V_{IN} ≤ 18V			0.3	6	mV
			●		0.6	6	mV
	LT1086-3.3	4.5V ≤ V_{IN} ≤ 18V, I_{OUT} = 0mA, T_J = 25°C			0.5	10	mV
			●		1.0	10	mV
	LT1086-3.6	4.75V ≤ V_{IN} ≤ 18V, I_{OUT} = 0mA, T_J = 25°C			0.5	10	mV
			●		1.0	10	mV
	LT1086-5	I_{OUT} = 0mA, T_J = 25°C, 6.5V ≤ V_{IN} ≤ 20V			0.5	10	mV
			●		1.0	10	mV
	LT1086-12	I_{OUT} = 0mA, T_J = 25°C, 13.5V ≤ V_{IN} ≤ 25V			1.0	25	mV
			●		2.0	25	mV
Load Regulation	LT1086, LT1086H	($V_{IN} – V_{OUT}$) = 3V, 10mA ≤ I_{OUT} ≤ 1.5A, (0.5A for LT1086H) T_J = 25°C (Notes 2, 3)			0.1	0.3	%
			●		0.2	0.4	%
	LT1086-2.85	V_{IN} = 5V, 0 ≤ I_{OUT} ≤ 1.5A, T_J = 25°C (Notes 2, 3)			3	12	mV
			●		6	20	mV
	LT1086-3.3	V_{IN} = 5V, 0 ≤ I_{OUT} ≤ 1.5A, T_J = 25°C (Notes 2, 3)			3	15	mV
			●		7	25	mV
	LT1086-3.6	V_{IN} = 5.25V, 0 ≤ I_{OUT} ≤ 1.5A, T_J = 25°C (Notes 2, 3)			3	15	mV
			●		6	25	mV
		V_{IN} = 5V, 0 ≤ I_{OUT} ≤ 1A, T_J = 25°C			2	15	mV
			●		4	25	mV
	LT1086-5	V_{IN} = 8V, 0 ≤ I_{OUT} ≤ 1.5A, T_J = 25°C (Notes 2, 3)			5	20	mV
			●		10	35	mV
	LT1086-12	V_{IN} = 15V, 0 ≤ I_{OUT} ≤ 1.5A, T_J = 25°C (Notes 2, 3)			12	36	mV
			●		24	72	mV
Dropout Voltage ($V_{IN} – V_{OUT}$)	LT1086/-2.85/-3.3/-3.6/-5/-12	ΔV_{OUT}, ΔV_{REF} = 1%, I_{OUT} = 1.5A (Note 4)	●		1.3	1.5	V
	LT1086H	ΔV_{REF} = 1%, I_{OUT} = 0.5A (Note 4)	●		0.95	1.25	V

ELECTRICAL CHARACTERISTICS

The ● denotes the specifications which apply over the full operating temperature range, otherwise specifications are at T_A = 25°C.

PARAMETER	CONDITIONS		MIN	TYP	MAX	UNITS
Current Limit	LT1086/-2.85/-3.3/-3.6/-5/-12 $(V_{IN} – V_{OUT})$ = 5V	●	1.50	2.00		A
	$(V_{IN} – V_{OUT})$ = 25V	●	0.05	0.15		A
	LT1086H $(V_{IN} – V_{OUT})$ = 5V	●	0.50	0.700		A
	$(V_{IN} – V_{OUT})$ = 25V	●	0.02	0.075		A
Minimum Load Current	LT1086/LT1086H $(V_{IN} – V_{OUT})$ = 25V (Note 5)	●		5	10	mA
Quiescient Current	LT1086-2.85 $V_{IN} \le 18V$	●		5	10	mA
	LT1086-3.3 $V_{IN} \le 18V$	●		5	10	mA
	LT1086-3.6 $V_{IN} \le 18V$	●		5	10	mA
	LT1086-5 $V_{IN} \le 20V$	●		5	10	mA
	LT1086-12 $V_{IN} \le 25V$	●		5	10	mA
Thermal Regulation	T_A = 25°C, 30ms pulse			0.008	0.04	%/W
Ripple Rejection	f = 120Hz, C_{OUT} = 25µF Tantalum, I_{OUT} = 1.5A, (I_{OUT} = 0.5A for LT1086H)					
	LT1086, LT1086H C_{ADJ} = 25µF, $(V_{IN} – V_{OUT})$ = 3V	●	60	75		dB
	LT1086-2.85 V_{IN} = 6V	●	60	72		dB
	LT1086-3.3 V_{IN} = 6.3V	●	60	72		dB
	LT1086-3.6 V_{IN} = 6.6V	●	60	72		dB
	LT1086-5 V_{IN} = 8V	●	60	68		dB
	LT1083-12 V_{IN} = 15V	●	54	60		dB
Adjust Pin Current	LT1086, LT1086H T_J = 25°C			55		µA
		●			120	µA
Adjust Pin Current Change	LT1086, LT1086H 10mA ≤ I_{OUT} ≤ 1.5A (0.5A for LT1086H)					
	1.5V ≤ $(V_{IN} – V_{OUT})$ ≤ 15V	●		0.2	5	µA
Temperature Stability		●		0.5		%
Long-Term Stability	T_A = 125°C, 1000 Hrs.			0.3	1	%
RMS Output Noise (% of V_{OUT})	T_A = 25°C, 10Hz = ≤ f ≤ 10kHz			0.003		%
Thermal Resistance Junction-to-Case	H Package: Control Circuitry/Power Transistor				15/20	°C/W
	K Package: Control Circuitry/Power Transistor				1.7/4.0	°C/W
	M Package: Control Circuitry/Power Transistor				1.5/4.0	°C/W
	T Package: Control Circuitry/Power Transistor				1.5/4.0	°C/W

Note 1: Absolute Maximum Ratings are those values beyond which the life of a device may be impaired.

Note 2: See Thermal Regulation specifications for changes in output voltage due to heating effects. Line and load regulation are measured at a constant junction temperature by low duty cycle pulse testing. Load regulation is measured at the output lead ≈1/8" from the package.

Note 3: Line and load regulation are guaranteed up to the maximum power dissipation of 15W (3W for the LT1086H). Power dissipation is determined by the input/output differential and the output current. Guaranteed maximum power dissipation will not be available over the full input/output range. See Short-Circuit Current curve for available output current.

Note 4: Dropout voltage is specified over the full output current range of the device. Test points and limits are shown on the Dropout Voltage curve.

Note 5: Minimum load current is defined as the minimum output current required to maintain regulation. At 25V input/output differential the device is guaranteed to regulate if the output current is greater than 10mA.

TYPICAL PERFORMANCE CHARACTERISTICS

LT1086 Short-Circuit Current

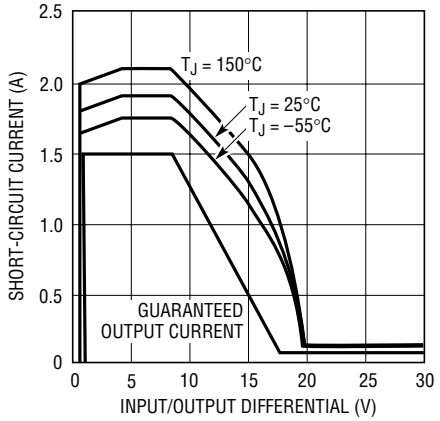

LT1086 Load Regulation

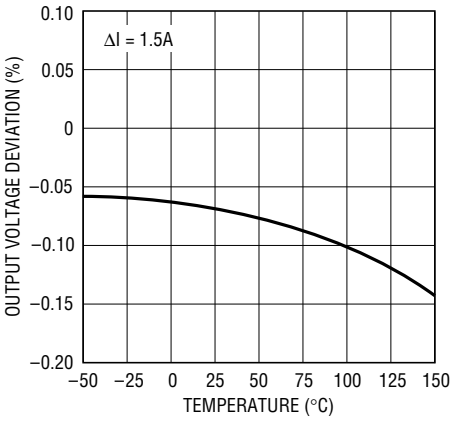

Minimum Operating Current (Adjustable Device)

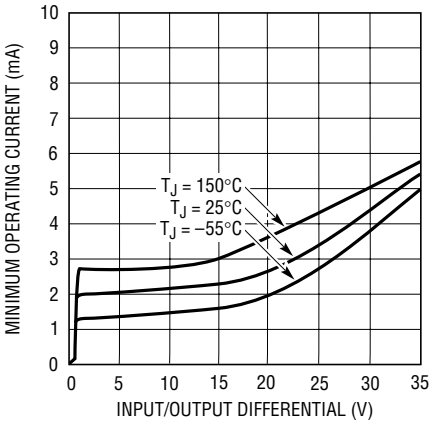

Temperature Stability

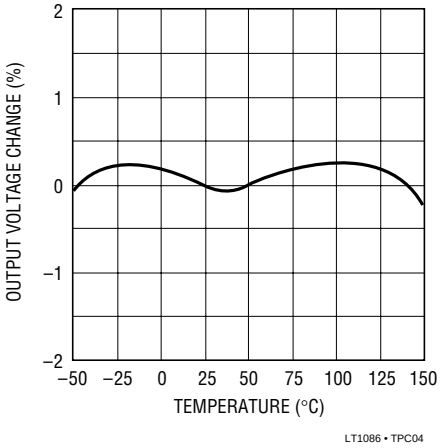

Adjust Pin Current

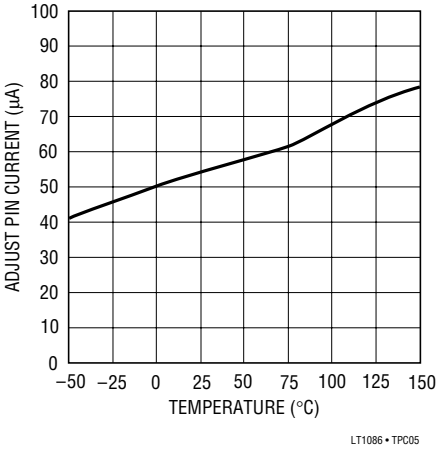

LT1086 Maximum Power Dissipation*

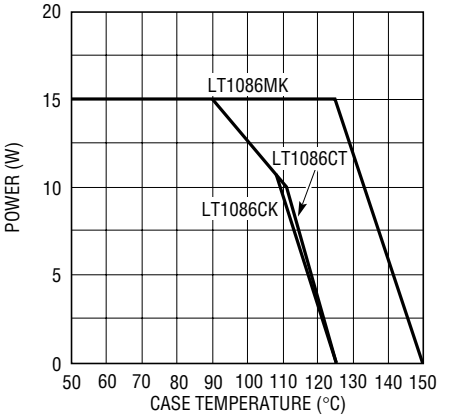

LT1086 Ripple Rejection

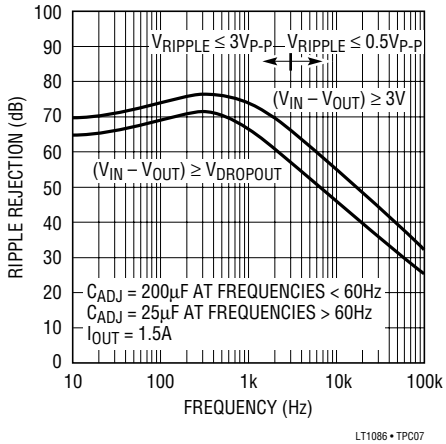

LT1086 Ripple Rejection vs Current

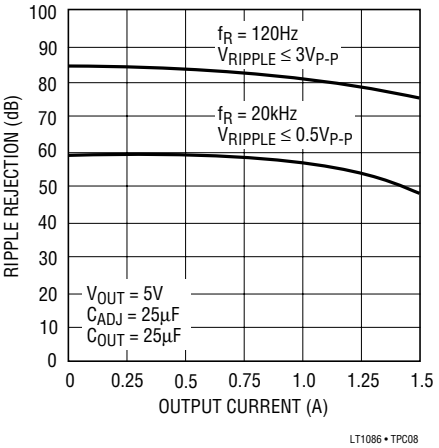

LT1086-5 Ripple Rejection

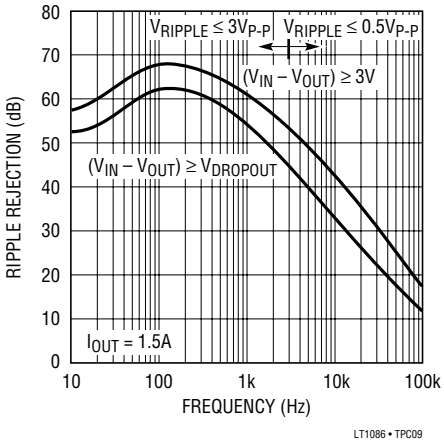

TYPICAL PERFORMANCE CHARACTERISTICS

LT1086-5 Ripple Rejection vs Current

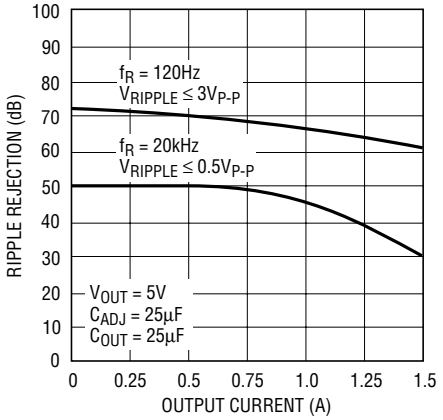

LT1086-12 Ripple Rejection

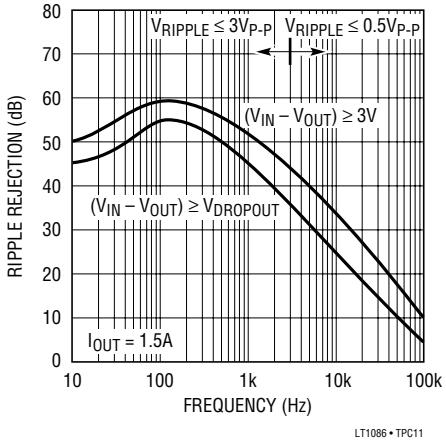

LT1086-12 Ripple Rejection vs Current

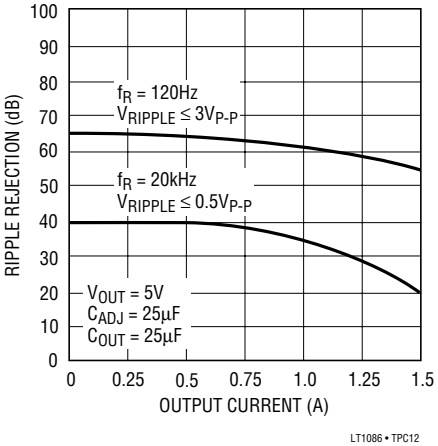

LT1086 Line Transient Response

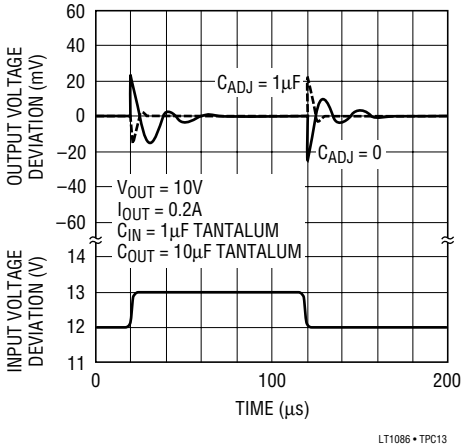

LT1086 Load Transient Response

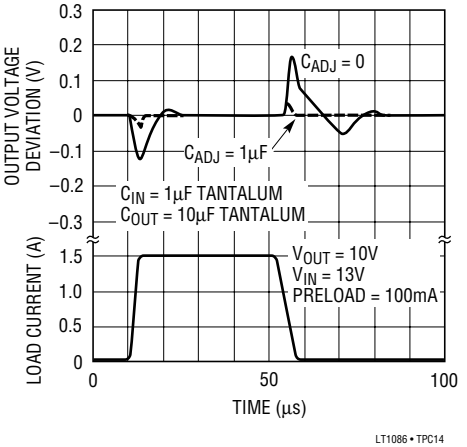

LT1086H Short-Circuit Current

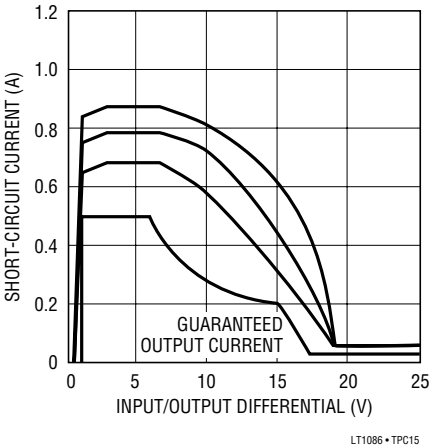

LT1086H Dropout Voltage

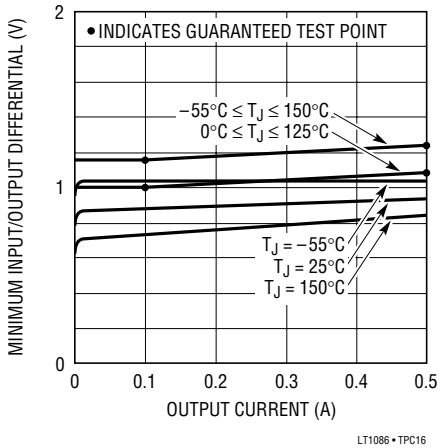

LT1086H Load Regulation

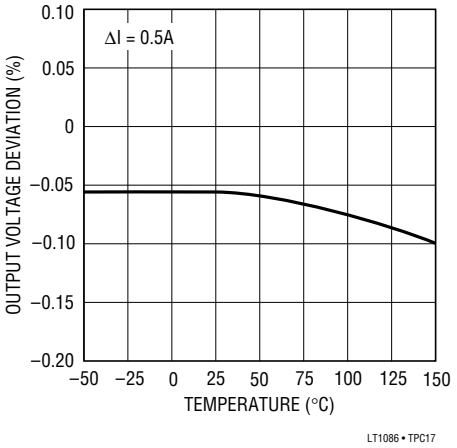

LT1086H Ripple Rejection vs Current

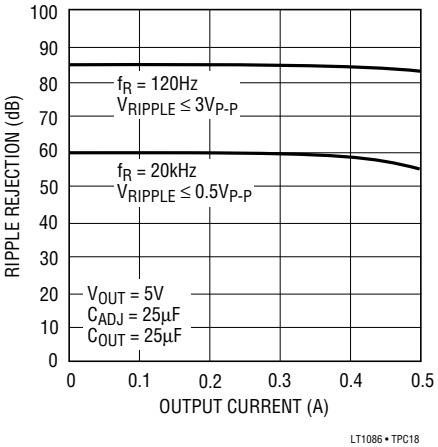

TYPICAL PERFORMANCE CHARACTERISTICS

LT1086H Ripple Rejection

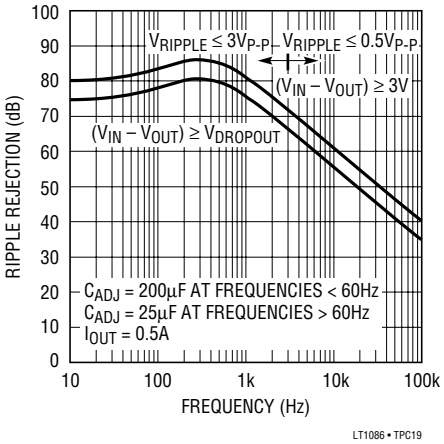

LT1086H Maximum Power Dissipation*

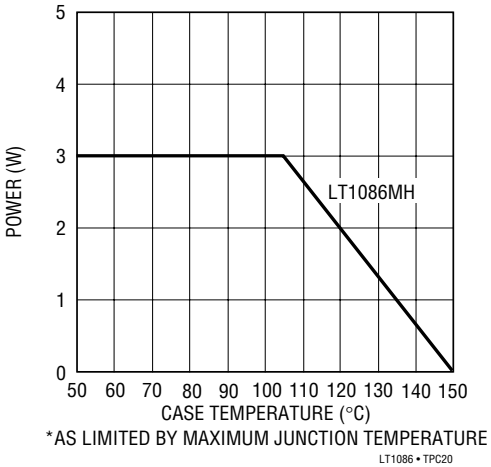

*AS LIMITED BY MAXIMUM JUNCTION TEMPERATURE

BLOCK DIAGRAM

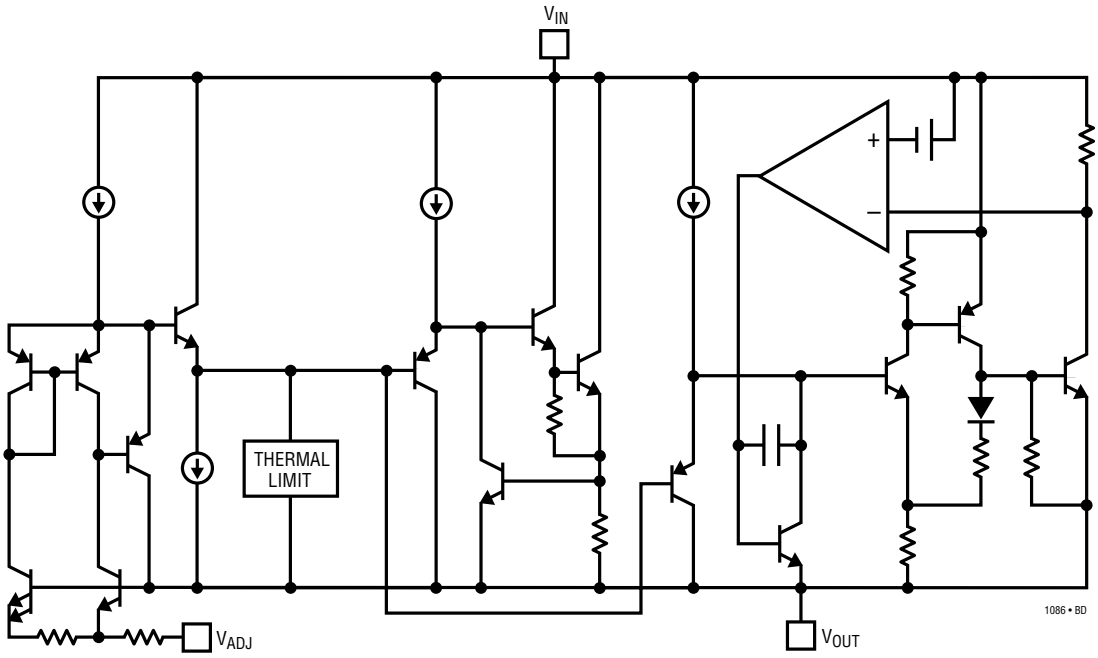

APPLICATIONS INFORMATION

The LT1086 family of 3-terminal regulators is easy to use and has all the protection features that are expected in high performance voltage regulators. They are short-circuit protected and have safe area protection as well as thermal shutdown to turn off the regulator should the temperature exceed about 165°C at the sense point.

These regulators are pin compatible with older 3-terminal adjustable devices, offer lower dropout voltage and more precise reference tolerance. Further, the reference stability with temperature is improved over older types of regulators. The only circuit difference between using the LT1086 family and older regulators is that they require an output capacitor for stability.

Stability

The circuit design used in the LT1086 family requires the use of an output capacitor as part of the device frequency compensation. For all operating conditions, the addition of 150µF aluminum electrolytic or a 22µF solid tantalum on the output will ensure stability. Normally capacitors much smaller than this can be used with the LT1086. Many different types of capacitors with widely varying characteristics are available. These capacitors differ in capacitor tolerance (sometimes ranging up to ±100%), equivalent series resistance, and capacitance temperature coefficient. The 150µF or 22µF values given will ensure stability.

When using the LT1086 the adjustment terminal can be bypassed to improve ripple rejection. When the adjustment terminal is bypassed the requirement for an output capacitor increases. The values of 22µF tantalum or 150µF aluminum cover all cases of bypassing the adjustment terminal. For fixed voltage devices or adjustable devices without an adjust pin bypass capacitor, smaller output capacitors can be used with equally good results. The table below shows approximately what size capacitors are needed to ensure stability.

Recommended Capacitor Values

INPUT	OUTPUT	ADJUSTMENT
10µF	10µF Tantalum, 50µF Aluminum	None
10µF	22µF Tantalum, 150µF Aluminum	20µF

Normally, capacitor values on the order of 100µF are used in the output of many regulators to ensure good transient response with heavy load current changes. Output capacitance can be increased without limit and larger values of output capacitor further improve stability and transient response of the LT1086 regulators.

Another possible stability problem that can occur in monolithic IC regulators is current limit oscillations. These can occur because in current limit, the safe area protection exhibits a negative impedance. The safe area protection decreases the current limit as the input-to-output voltage increases.That is the equivalent of having a negitive resistance since increasing voltage causes current to decrease. Negative resistance during current limit is not unique to the LT1086 series and has been present on all power IC regulators. The value of negative resistance is a function of how fast the current limit is folded back as input-to-output voltage increases. This negative resistance can react with capacitors or inductors on the input to cause oscillation during current limiting. Depending on the value of series resistance, the overall circuitry may end up unstable. Since this is a system problem, it is not necessarily easy to solve; however, it does not cause any problems with the IC regulator and can usually be ignored.

Protection Diodes

In normal operation the LT1086 family does not need any protection diodes. Older adjustable regulators required protection diodes between the adjustment pin and the output and from the output to the input to prevent overstressing the die. The internal current paths on the LT1086 adjustment pin are limited by internal resistors. Therefore, even with capacitors on the adjustment pin, no protection diode is needed to ensure device safety under short-circuit conditions.

Diodes between input and output are usually not needed. The internal diode between the input and the output pins of the LT1086 family can handle microsecond surge currents of 10A to 20A. Even with large output capacitances, it is very difficult to get those values of surge currents in normal operation. Only with high value output capacitors such as 1000µF to 5000µF, and with the input pin instantaneously shorted to ground, can damage occur. A crowbar circuit at the input of the LT1086 can generate those kinds of currents and a diode from output to input is then recommended. Normal power supply cycling or even

APPLICATIONS INFORMATION

plugging and unplugging in the system will not generate current large enough to do any damage.

The adjustment pin can be driven on a transient basis ±25V, with respect to the output without any device degradation. Of course as with any IC regulator, exceeding the maximum input-to-output voltage differential causes the internal transistors to break down and none of the protection circuitry is functional.

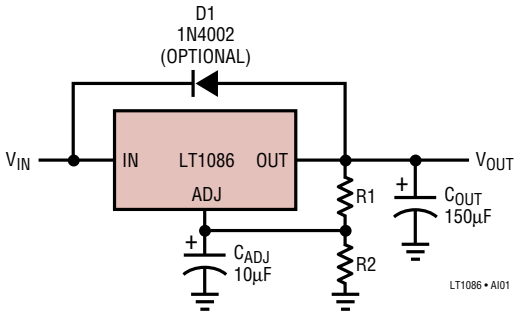

Overload Recovery

Like any of the IC power regulators, the LT1086 has safe area protection. The safe area protection decreases the current limit as input-to-output voltage increases and keeps the power transistor inside a safe operating region for all values of input-to-output voltage. The LT1086 protection is designed to provide some output current at all values of input-to-output voltage up to the device breakdown.

When power is first turned on, as the input voltage rises, the output follows the input, allowing the regulator to start up into very heavy loads. During the start-up, as the input voltage is rising, the input-to-output voltage differential remains small, allowing the regulator to supply large output currents. With high input voltage, a problem can occur wherein removal of an output short will not allow the output voltage to recover. Older regulators such as the 7800 series also exhibited this phenomenon, so it is not unique to the LT1086.

The problem occurs with a heavy output load when the input voltage is high and the output voltage is low, such as immediately after a removal of a short. The load line for such a load may intersect the output current curve at two points. If this happens there are two stable output operating points for the regulator. With this double intersection the power supply may need to be cycled down to zero and brought up again to make the output recover.

Ripple Rejection

For the LT1086 the typical curves for ripple rejection reflect values for a bypassed adjust pin. This curve will be true for all values of output voltage. For proper bypassing and ripple rejection approaching the values shown, the impedance of the adjust pin capacitor at the ripple frequency should equal the value of R1, (normally 100Ω to 120Ω). The size of the required adjust pin capacitor is a function of the input ripple frequency. At 120Hz the adjust pin capacitor should be 13µF if R1 = 100Ω; at 10kHz only 0.16µF is needed.

For circuits without an adjust pin bypass capacitor the ripple rejection will be a function of output voltage. The output ripple will increase directly as a ratio of the output voltage to the reference voltage (V_{OUT}/V_{REF}). For example, with the output voltage equal to 5V and no adjust pin capacitor, the output ripple will be higher by the ratio of 5V/1.25V or four times larger. Ripple rejection will be degraded by 12dB from the value shown on the LT1086 curve. Typical curves are provided for the 5V and 12V devices since the adjust pin is not available.

Output Voltage

The LT1086 develops a 1.25V reference voltage between the output and the adjust terminal (see Figure 1). By placing resistor R1 between these two terminals, a constant current is caused to flow through R1 and down through R2 to set the overall output voltage. Normally this current is chosen to be the specified minimum load current of 10mA. Because I_{ADJ} is very small and constant when compared with the current through R1, it represents a small error and can usually be ignored. For fixed voltage devices R1 and R2 are included in the device.

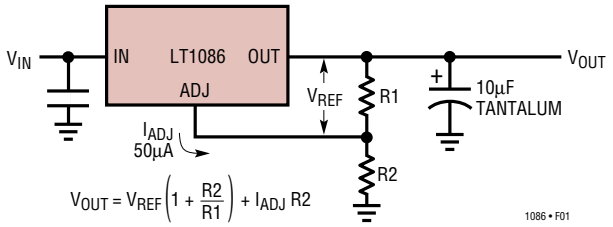

Figure 1. Basic Adjustable Regulator

APPLICATIONS INFORMATION

Load Regulation

Because the LT1086 is a 3-terminal device, it is not possible to provide true remote load sensing. Load regulation will be limited by the resistance of the wire connecting the regulator to the load. The data sheet specification for load regulation is measured at the bottom of the package. Negative side sensing is a true Kelvin connection, with the bottom of the output divider returned to the negative side of the load. Although it may not be immediately obvious, best load regulation is obtained when the top of the resistor divider R1 is connected *directly* to the case *not to the load*, as illustrated in Figure 2. If R1 were connected to the load, the effective resistance between the regulator and the load would be:

$$R_P\left(\frac{R2 + R1}{R1}\right),\ R_P = \text{Parasitic Line Resistance}$$

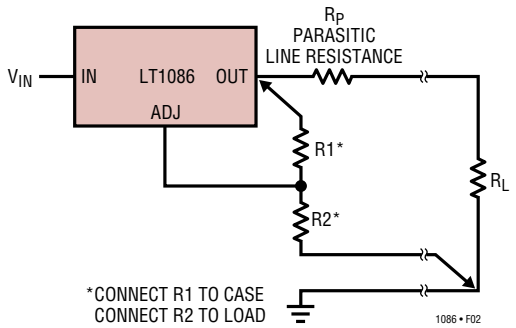

Figure 2. Connections for Best Load Regulation

Connected as shown, R_P is not multiplied by the divider ratio. R_P is about 0.004Ω per foot using 16-gauge wire. This translates to 4mV/ft at 1A load current, so it is important to keep the positive lead between regulator and load as short as possible and use large wire or PC board traces.

Note that the resistance of the package leads for the H package ≈0.06Ω/inch. While it is usually not possible to connect the load directly to the package, it is possible to connect larger wire or PC traces close to the case to avoid voltage drops that will degrade load regulation.

For fixed voltage devices the top of R1 is internally Kelvin connected and the ground pin can be used for negative side sensing.

Thermal Considerations

The LT1086 series of regulators have internal power and thermal limiting circuitry designed to protect the device under overload conditions. For continuous normal load conditions however, maximum junction temperature ratings must not be exceeded. It is important to give careful consideration to all sources of thermal resistance from junction to ambient. This includes junction-to-case, case-to-heat sink interface and heat sink resistance itself. New thermal resistance specifications have been developed to more accurately reflect device temperature and ensure safe operating temperatures. The data section for these new regulators provides a separate thermal resistance and maximum junction temperature for both the *Control Section* and the *Power Transistor*. Previous regulators, with a single junction-to-case thermal resistance specification, used an average of the two values provided here and therefore could allow excessive junction temperatures under certain conditions of ambient temperature and heat sink resistance. To avoid this possibility, calculations should be made for both sections to ensure that both thermal limits are met.

For example, using a LT1086CK (TO-3, Commercial) and assuming:

V_{IN}(max continuous) = 9V, V_{OUT} = 5V, I_{OUT} = 1A, T_A = 75°C, $\theta_{HEAT\ SINK}$ = 3°C/W, $\theta_{CASE\text{-}TO\text{-}HEAT\ SINK}$ = 0.2°C/W for T package with thermal compound.

Power dissipation under these conditions is equal to:

$$P_D = (V_{IN} - V_{OUT})(I_{OUT}) = 4W$$

Junction temperature will be equal to:

$$T_J = T_A + P_D\ (\theta_{HEAT\ SINK} + \theta_{CASE\text{-}TO\text{-}HEAT\ SINK} + \theta_{JC})$$

For the Control Section:

$$T_J = 75°C + 4W(3°C/W + 0.2°C/W + 1.5°C/W) = 94.6°C$$

95°C < 125°C = T_{JMAX} (Control Section Commercial Range)

For the Power Transistor:

$$T_J = 75°C + 4W(3°C/W + 0.2°C/W + 4°C/W) = 103.8°C$$

103.8°C < 150°C = T_{JMAX} (Power Transistor Commercial Range)

APPLICATIONS INFORMATION

In both cases the junction temperature is below the maximum rating for the respective sections, ensuring reliable operation.

Junction-to-case thermal resistance for the K and T packages is specified from the IC junction to the bottom of the case directly below the die. This is the lowest resistance path for heat flow. While this is also the lowest resistance path for the H package, most available heat sinks for this package are of the clip-on type that attach to the cap of the package. The data sheet specification for thermal resistance for the H package is therefore written to reflect this.

In all cases proper mounting is required to ensure the best possible heat flow from the die to the heat sink. Thermal compound at the case-to-heat sink interface is strongly recommended. In the case of the H package, mounting the device so that heat can flow out the bottom of the case will significantly lower thermal resistance (≈ a factor of 2). If the case of the device must be electrically isolated, a thermally conductive spacer can be used as long as its added contribution to thermal resistance is considered. Note that the case of all devices in this series is electrically connected to the output.

TYPICAL APPLICATIONS

5V, 1.5A Regulator

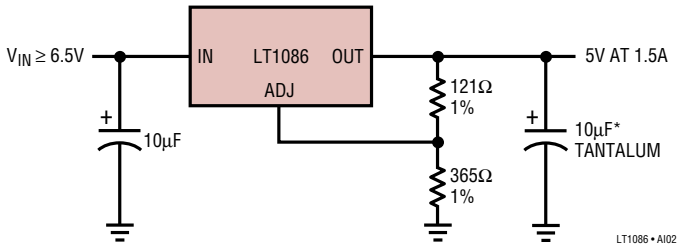

*REQUIRED FOR STABILITY

SCSI-2 Active Termination

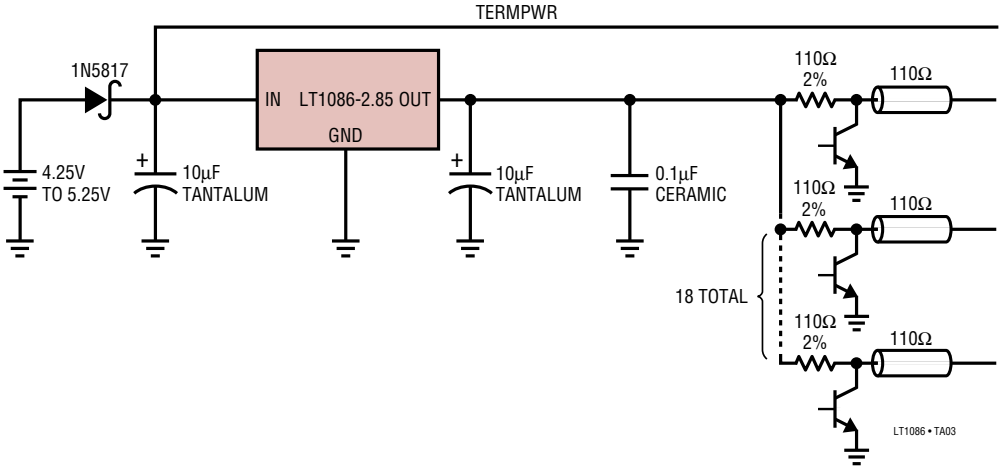

TYPICAL APPLICATIONS

1.2V to 15V Adjustable Regulator

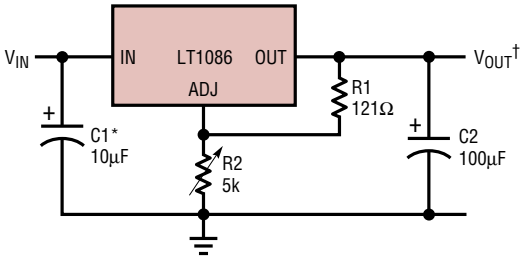

*NEEDED IF DEVICE IS FAR FROM FILTER CAPACITORS

$^{\dagger}V_{OUT} = 1.25V\left(1 + \frac{R2}{R1}\right)$

5V Regulator with Shutdown

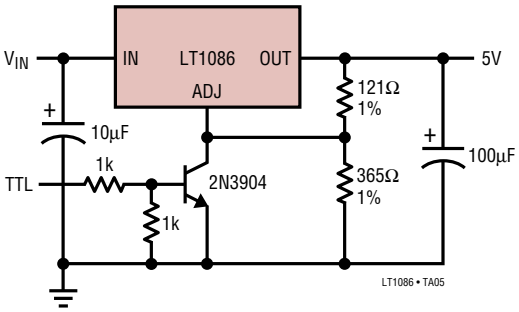

Battery Charger

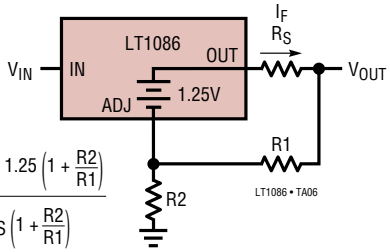

$$I_F = \frac{V_{OUT} - 1.25\left(1 + \frac{R2}{R1}\right)}{-R_S\left(1 + \frac{R2}{R1}\right)}$$

$$\left(\frac{dI_F}{dV_{OUT}}\right) = \frac{1}{-R_S\left(1 + \frac{R2}{R1}\right)}$$

Adjusting Output Voltage of Fixed Regulators

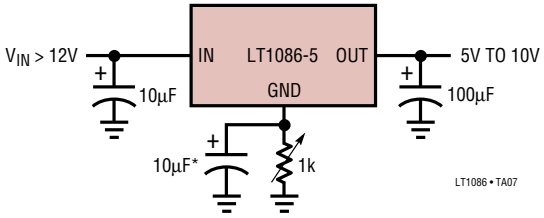

*OPTIONAL IMPROVES RIPPLE REJECTION

Regulator with Reference

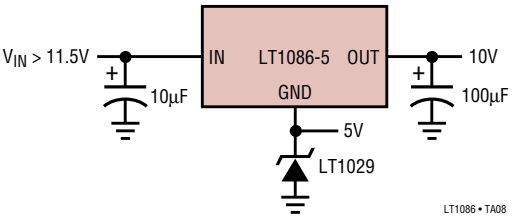

Protected High Current Lamp Driver

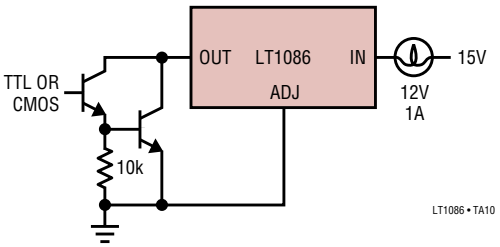

Remote Sensing

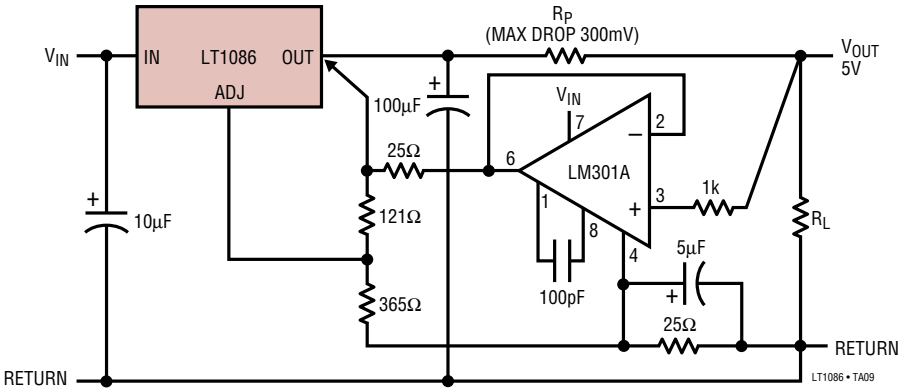

TYPICAL APPLICATIONS

High Efficiency Dual Linear Supply

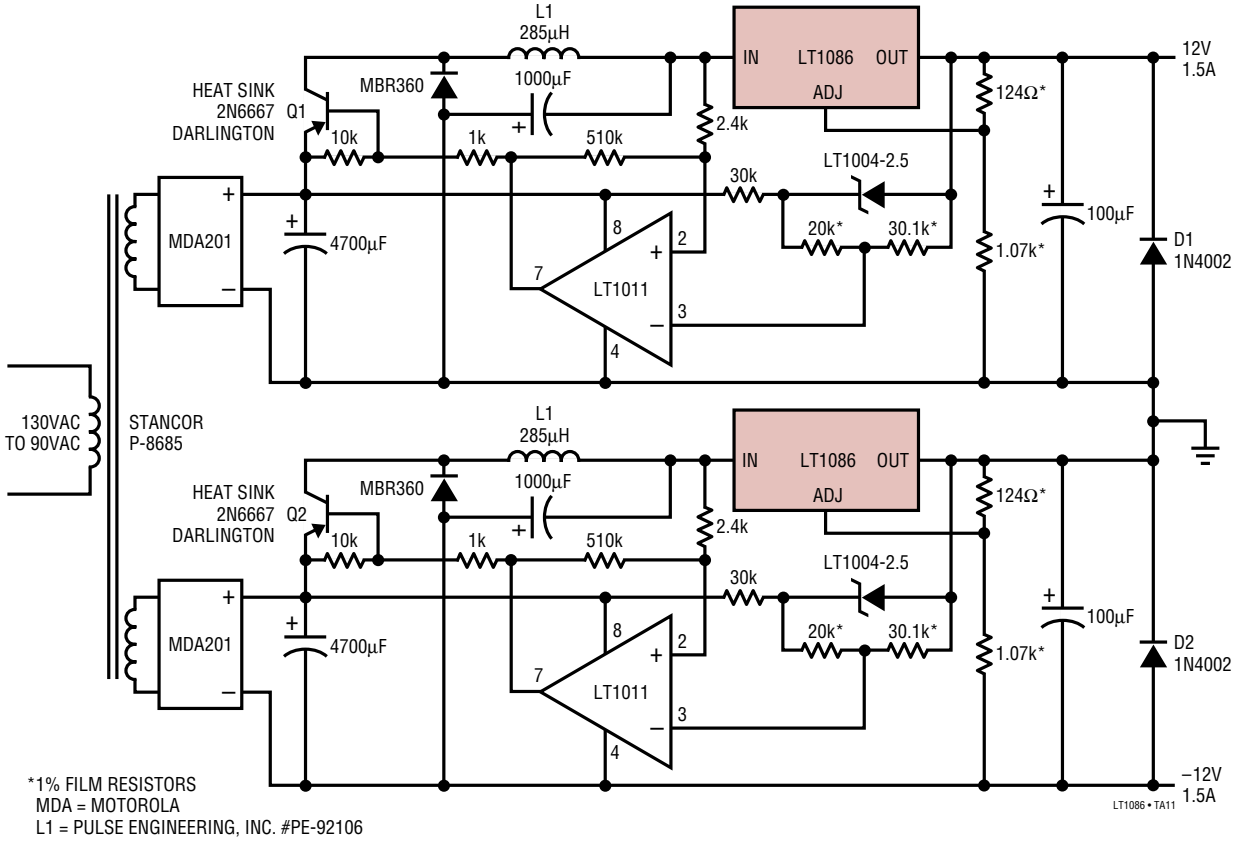

High Efficiency Dual Supply

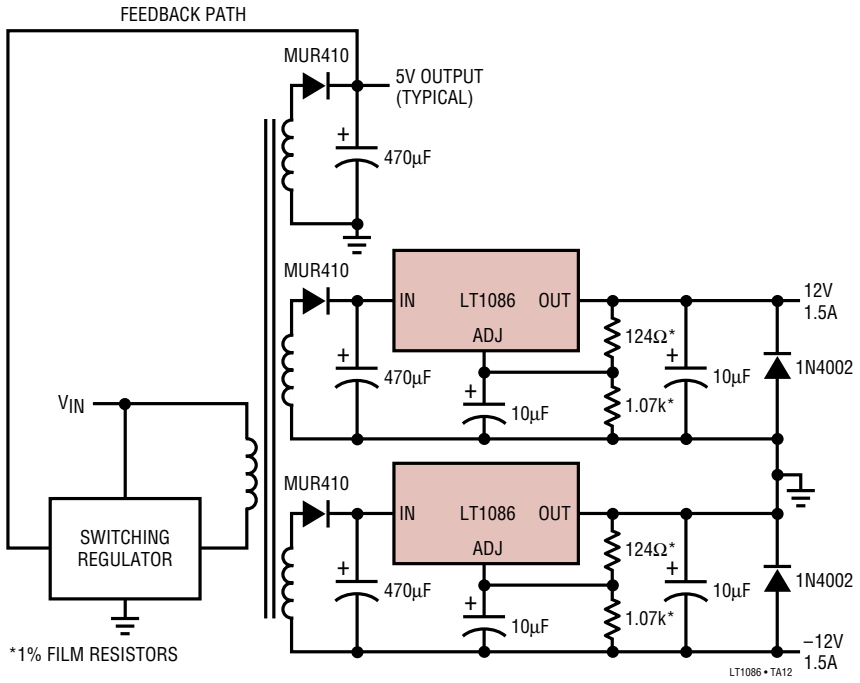

TYPICAL APPLICATIONS

Battery Backed Up Regulated Supply

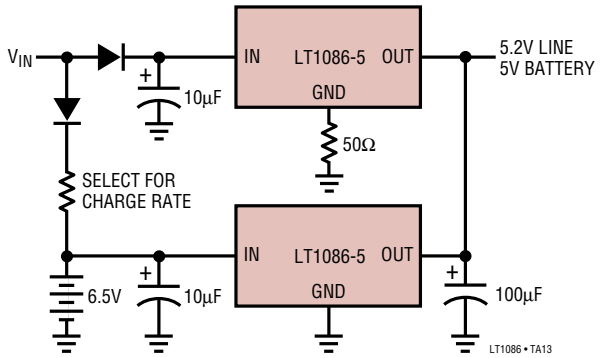

Improving Ripple Rejection

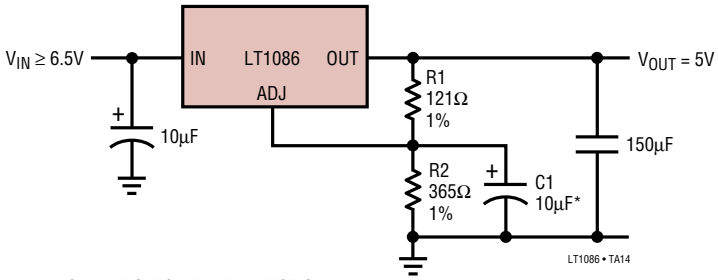

*C1 IMPROVES RIPPLE REJECTION.
X_C SHOULD BE ≈ R1 AT RIPPLE FREQUENCY

Automatic Light Control

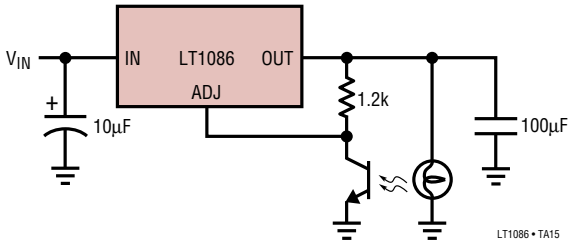

Low Dropout Negative Supply

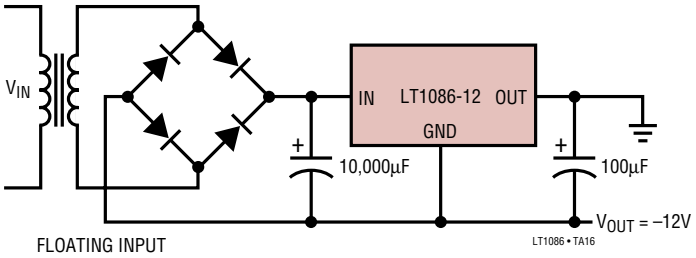

PACKAGE DESCRIPTION

H Package
3-Lead TO-39 Metal Can
(Reference LTC DWG # 05-08-1330)

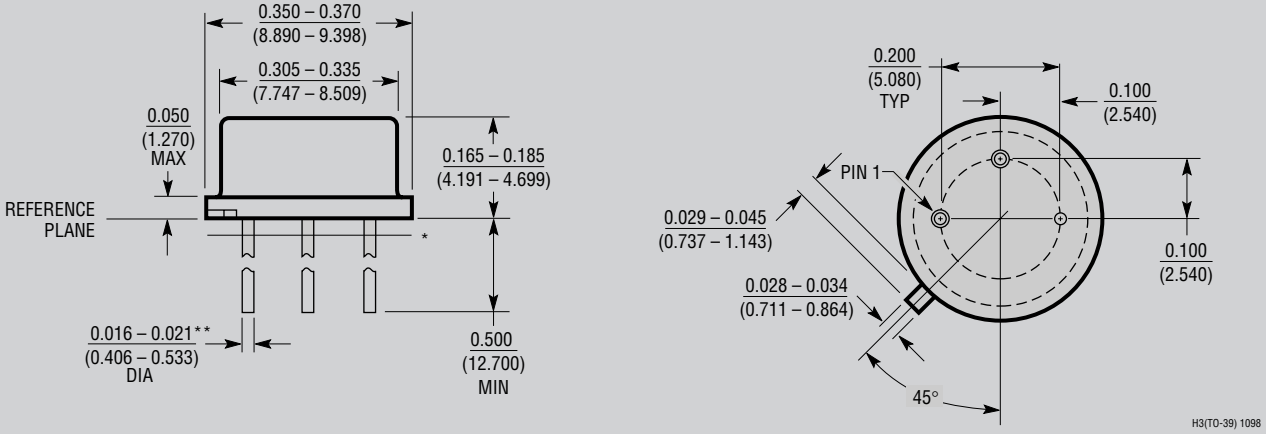

*LEAD DIAMETER IS UNCONTROLLED BETWEEN THE REFERENCE PLANE AND 0.045" BELOW THE REFERENCE PLANE

**FOR SOLDER DIP LEAD FINISH, LEAD DIAMETER IS $\frac{0.016 – 0.024}{(0.406 – 0.610)}$

OBSOLETE PACKAGE

PACKAGE DESCRIPTION

K Package
2-Lead TO-3 Metal Can
(Reference LTC DWG # 05-08-1310)

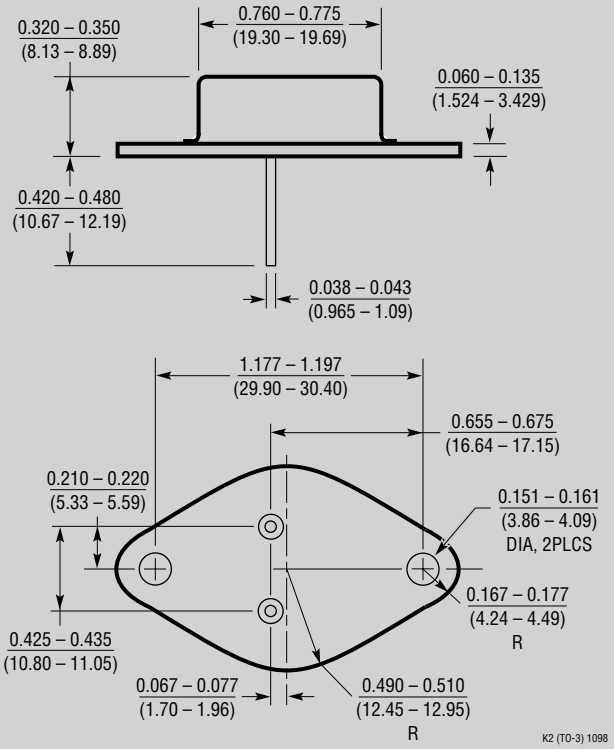

OBSOLETE PACKAGE

M Package
3-Lead Plastic DD Pak
(Reference LTC DWG # 05-08-1460)

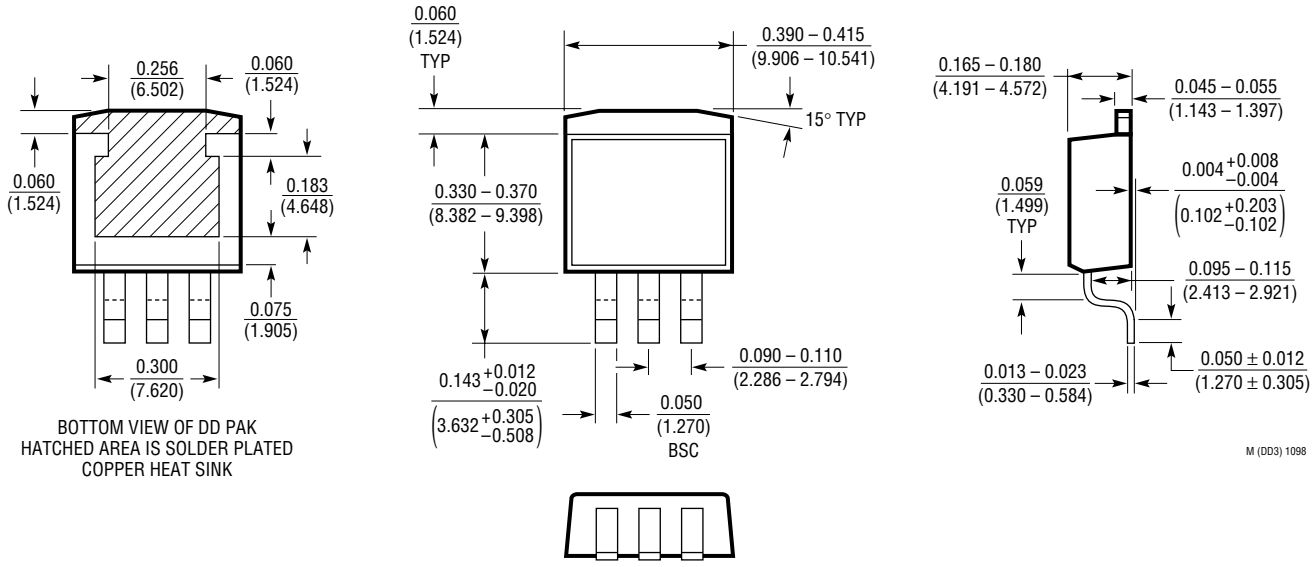

Information furnished by Linear Technology Corporation is believed to be accurate and reliable. However, no responsibility is assumed for its use. Linear Technology Corporation makes no representation that the interconnection of its circuits as described herein will not infringe on existing patent rights.

PACKAGE DESCRIPTION

T Package
3-Lead Plastic TO-220
(Reference LTC DWG # 05-08-1420)

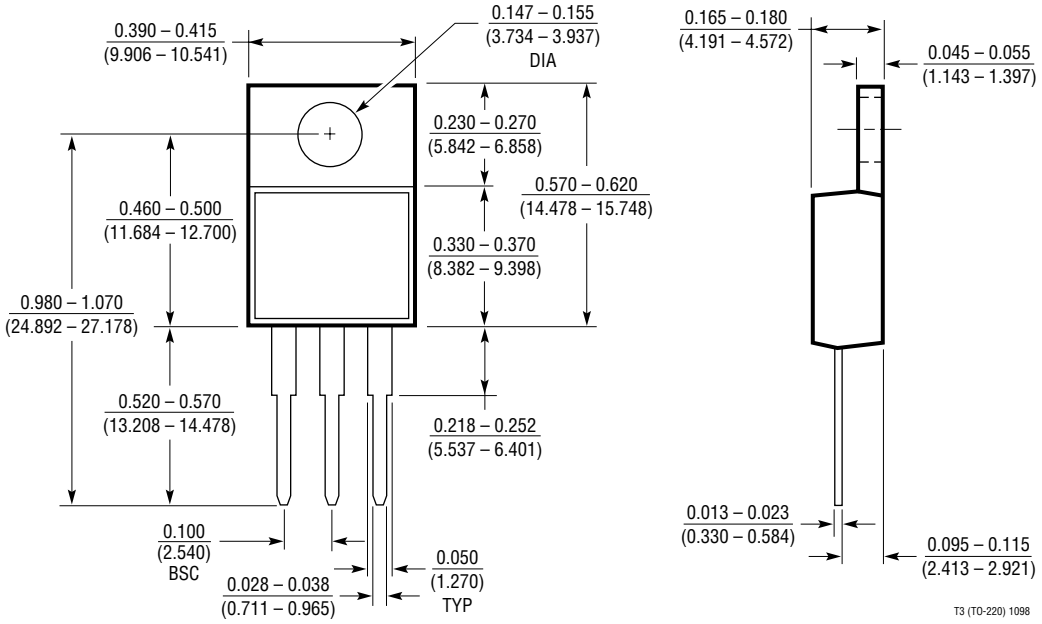

RELATED PARTS

PART NUMBER	DESCRIPTION	COMMENTS
LT1129	700mA, Micropower, LDO	V_{IN} = 4.2V to 30V, $V_{OUT(MIN)}$ = 3.75V, I_Q = 50µA, I_{SD} = 16µA, DD, SOT-223, S8, TO-220, TSSOP-20 Packages
LT1528	3A LDO for Microprocessor Applications	V_{IN} = 4V to 15V, $V_{OUT(MIN)}$ = 3.30V, I_Q = 400µA, I_{SD} = 125µA, Fast Transient Response, DD, TO-220 Packages
LT1585	4.6A LDO , with Fast Transient Response	V_{IN} = 2.5V to 7V, $V_{OUT(MIN)}$ = 1.25V, I_Q = 8mA, Fast Transient Response, DD, TO-220 Packages
LT1761	100mA, Low Noise Micropower, LDO	V_{IN} = 1.8V to 20V, $V_{OUT(MIN)}$ = 1.22V, I_Q = 20µA, I_{SD} = <1µA, Low Noise < 20µ$V_{RMS\ P-P}$, Stable with 1µF Ceramic Capacitors, ThinSOT™ Package
LT1762	150mA, Low Noise Micropower, LDO	V_{IN} = 1.8V to 20V, $V_{OUT(MIN)}$ = 1.22V, I_Q = 25µA, I_{SD} = <1µA, Low Noise < 20µ$V_{RMS\ P-P}$, MSOP Package
LT1763	500mA, Low Noise Micropower, LDO	V_{IN} = 1.8V to 20V, $V_{OUT(MIN)}$ = 1.22V, I_Q = 30µA, I_{SD} = <1µA, Low Noise < 20µ$V_{RMS\ P-P}$, S8 Package
LT1764/LT1764A	3A, Low Noise, Fast Transient Response, LDOs	V_{IN} = 2.7V to 20V, $V_{OUT(MIN)}$ = 1.21V, I_Q = 1mA, I_{SD} = <1µA, Low Noise < 40µ$V_{RMS\ P-P}$, "A" Version Stable with Ceramic Capacitor, DD, TO-220 Packages
LT1962	300mA, Low Noise Micropower, LDO	V_{IN} = 1.8V to 20V, $V_{OUT(MIN)}$ = 1.22V, I_Q = 30µA, I_{SD} = <1µA, Low Noise < 20µ$V_{RMS\ P-P}$, MS8 Package
LT1963/LT1963A	1.5A, Low Noise, Fast Transient Response, LDOs	V_{IN} = 2.1V to 20V, $V_{OUT(MIN)}$ = 1.21V, I_Q = 1mA, I_{SD} = <1µA, Low Noise < 40µ$V_{RMS\ P-P}$,"A" Version Stable with Ceramic Capacitor, DD, TO-220, SOT-223, S8 Packages
LT1964	200mA, Low Noise Micropower, Negative LDO	V_{IN} = –0.9V to –20V, $V_{OUT(MIN)}$ = –1.21V, I_Q = 30µA, I_{SD} = 3µA, Low Noise < 30µ$V_{RMS\ P-P}$, Stable with Ceramic Capacitors, ThinSOT Package

ThinSOT is a trademark of Linear Technology Corporation.

Linear Technology Corporation
1630 McCarthy Blvd., Milpitas, CA 95035-7417
(408) 432-1900 • FAX: (408) 434-0507 • www.linear.com

LT/TP 0703 1K REV F • PRINTED IN USA

© LINEAR TECHNOLOGY CORPORATION 1988