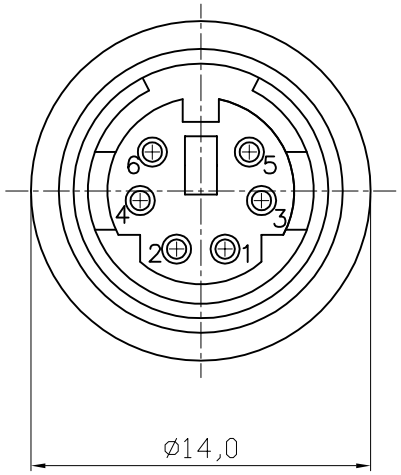

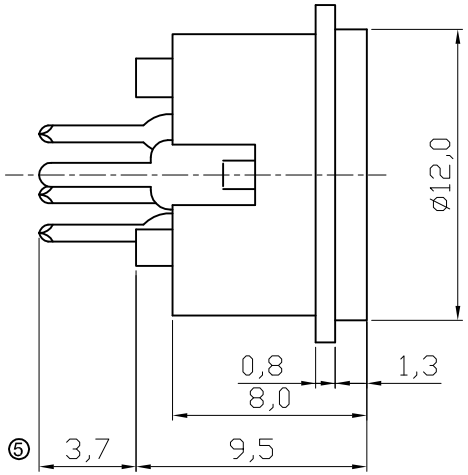

1.Material:
Contacts: Phosphor Bronze
Insulator:PBT+30%G.F UL 94V-0 Black
Shell: Brass
2.Mechanical:
Mating Force:45N max.
Withdrawal Force:7N min.
Durability:500 cycles min.
3.Electrical:
⑤ Current-max[amps]1.0A
voltage-max[volts]30V
Withstanding Voltage 750V AC
Contact Resistance[ohms] 30 milliohms max
Insulation Resistance[ohms]1000 Megohms min
4.Plating:
Contacts:Full Gold Flash
5.Environmental
Temperature Range -25℃~ +85℃

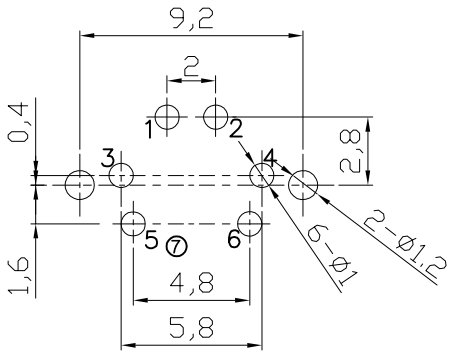

Recommended PCB Layout ⑥
Top View Tolerance(±0,05)

RoHS compliant
Unit: mm

Scale	Free
TOLERANCE	
X.X	±0.30
X.XX	±0.20
X.XXX	±0.10
DIM	TOL
X.°	±5°
X.X°	±3°
Angle	TOL

Id.	Modification	Date	Name
⑦	Update to correct pin numbers	21.08.2015	Amy
⑥	Update	25.03.2013	Amy
⑤	Update	12.12.2012	Amy
④	Change the manufacture plant	25.11.2010	Alex
③	Add UL No. for PBT	15.04.2010	Dean
②	Update	15.07.2009	Rale

	Date	Name
Drawn	27.02.2002	Hellwig
Approved	21.08.2015	Amy

ASSMANN WSW components

Customer-No.

ASSMANN WSW-No.
A-DIO-TOP/06

Drawing-No.
ASS 1010A CO

rev07

Replace

Sheet

Downloaded from Arrow.com.