## Features

- Bourns® FLAT™ GDT technology
- Flexible mounting options
- Volume- and space-saving design
- Improved impulse performance
- 5 kA 8/20 µs rated
- UL Recognized
- RoHS compliant*

## Applications

- Telecom CPE
- Industrial Communications
- Surge Protective Devices
- High density PCB assemblies

# 2015 Series Gas Discharge Tube Surge Arrestor with FLAT™ Technology

## Description

Bourns sets a new industry standard by offering this 2-electrode Gas Discharge Tube (GDT) in an innovative flat package design. The Model 2015 Series with FLAT™ Technology provides a volume and space-saving solution for high density and space-restricted PCB applications. The series is offered in a leadless version for cartridge or clamp fit applications. Surface mount versions are available in vertical and horizontal mounting configurations.

## Characteristics

Test Methods per ITU-T (CCITT) K.12 Class 2 and IEC 61643-311

| Characteristic | Model No. | | | |
|---|---|---|---|---|
| | 2015-09 | 2015-15 | 2015-23 | 2015-35 |
| DC Sparkover ±20 % @ 100 V/s (1) | 90 V | 150 V | 230 V | 350 V |
| DC Sparkover End-of-Life Values (2) | | | | |
| Maximum (99 % of values) | <120 V | <195 V | <300 V | <455 V |
| Minimum (99 % of values) | > 65 V | >110 V | >170 V | >260 V |
| Impulse Sparkover Voltage (3) | | | | |
| 100 V/µs Typical | 400 V | 400 V | 450 V | 600 V |
| 1 kV/µs Typical | 700 V | 650 V | 650 V | 800 V |

| Characteristic | Model No. | | |
|---|---|---|---|
| | 2015-42 | 2015-50 | 2015-60 |
| DC Sparkover ±20 % @ 100 V/s (1) | 420 V | 500 V | 600 V |
| DC Sparkover End-of-Life Values (2) | | | |
| Maximum (99 % of values) | <550 V | <650 V | <780 V |
| Minimum (99 % of values) | >360 V | >400 V | >450 V |
| Impulse Sparkover Voltage (3) | | | |
| 100 V/µs Typical | 650 V | 700 V | 750 V |
| 1 kV/µs Typical | 850 V | 900 V | 950 V |

| | | |
|---|---|---|
| Insulation Resistance (IR) | 100 V (50 V for Model 2015-09) | >1 GΩ |
| Glow Voltage | 10 mA | ~70 V |
| Arc Voltage | >1 A | ~10 V |
| Capacitance | 1 MHz | <1.9 pF |
| Impulse Discharge Current | 10000 A, 8/20 µs | 1 operation |
| | 5000 A, 8/20 µs | >10 operations |
| | 1000 A, 10/350 µs | 1 operation |
| | 100 A, 10/1000 µs | >300 operations |
| | 10 A, 10/1000 µs | >1500 operations |
| Alternating Discharge Current | 5 Arms, 1 s | >10 operations |
| Operating Temperature | | -55 to +85 °C |
| Storage Temperature | | -55 to +105 °C |
| Climatic Category (IEC 60068-1) | | 40/90/21 |
| Pushover Strength (4) | | 5 kg |

Notes:

**UL Recognized component, UL File E153537**

(1) In ionized mode.

(2) IR after life >$10^8$ Ω.

(3) At delivery AQL 0.65 Level II, DIN ISO 2859.

(4) Pushover Strength test performed on a board-mounted Model 2015-xx-SMC (Vertical Mount).

*RoHS Directive 2002/95/EC Jan. 27, 2003 including annex and RoHS Recast 2011/65/EU June 8, 2011.

"FLAT" is a registered trademark of Bourns, Inc. in China, Sweden, and the European Community, with a trademark registration application pending in the U.S.
Specifications are subject to change without notice.
The device characteristics and parameters in this data sheet can and do vary in different applications and actual device performance may vary over time.
Users should verify actual device performance in their specific applications.

## Product Dimensions

### 2015-xx-A-RPLF

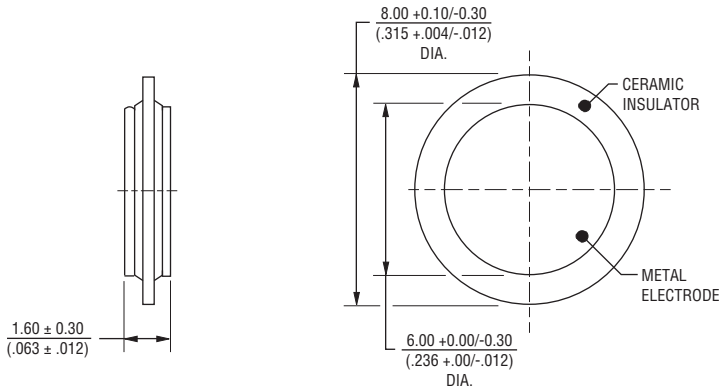


### 2015-xx--SMH-RPLF

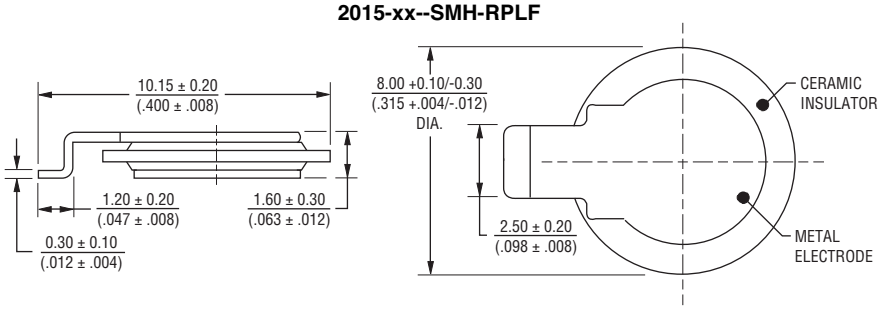


### 2015-xx-SMC-RPLF

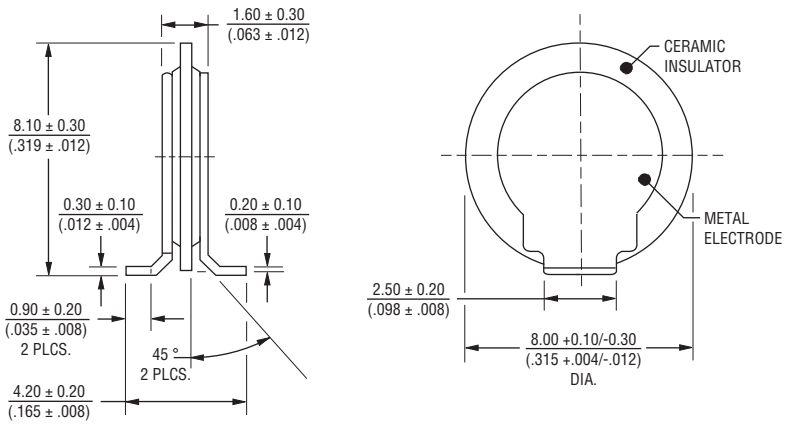


DIMENSIONS: MM (INCHES)

## How to Order

**2015 - xx - xxx - RP LF**

Series Designator
- 2015 = 2-electrode GDT with FLAT™ Technology, 5 kA 8/20 $\mu$s rated

Voltage (Divided by 10)

| | |
|---|---|
| 09 = 90 V | 42 = 420 V |
| 15 = 150 V | 50 = 500 V |
| 23 = 230 V | 60 = 600 V |
| 35 = 350 V | |

Configuration
- A = No Leads, (Clamp-Cartridge)
- SMH = Horizontal Mount SMD
- SMC = Vertical Mount SMD

Packaging
- RP = Reelpack (Standard)

RoHS Compliancy
- LF = RoHS Compliant Product

## Typical Part Marking

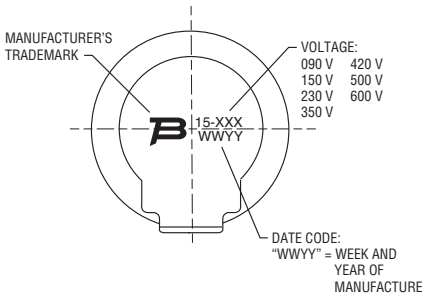


Specifications are subject to change without notice.
The device characteristics and parameters in this data sheet can and do vary in different applications and actual device performance may vary over time.
Users should verify actual device performance in their specific applications.

## Packaging Specifications

Model 2015-xx-SMC-RPLF: The standard tape and reel packaging contains 500 pieces per 13-inch reel.

Model 2015-xx-SMH-RPLF and 2015-xx-A-RPLF: The standard tape and reel packaging contains 2,000 pieces per 13-inch reel.

DIMENSIONS: MM (INCHES)

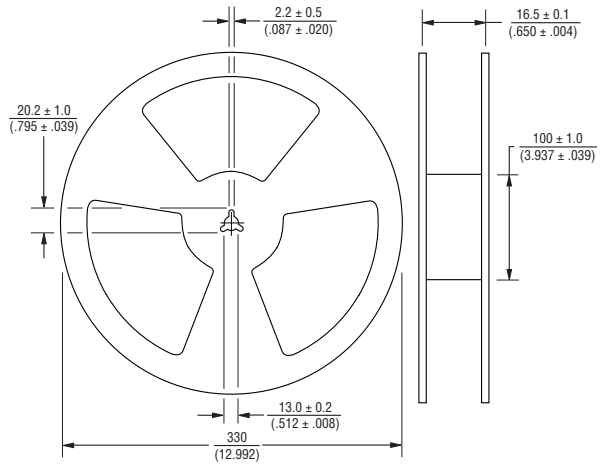


### 2015-xx-SMC-RPLF

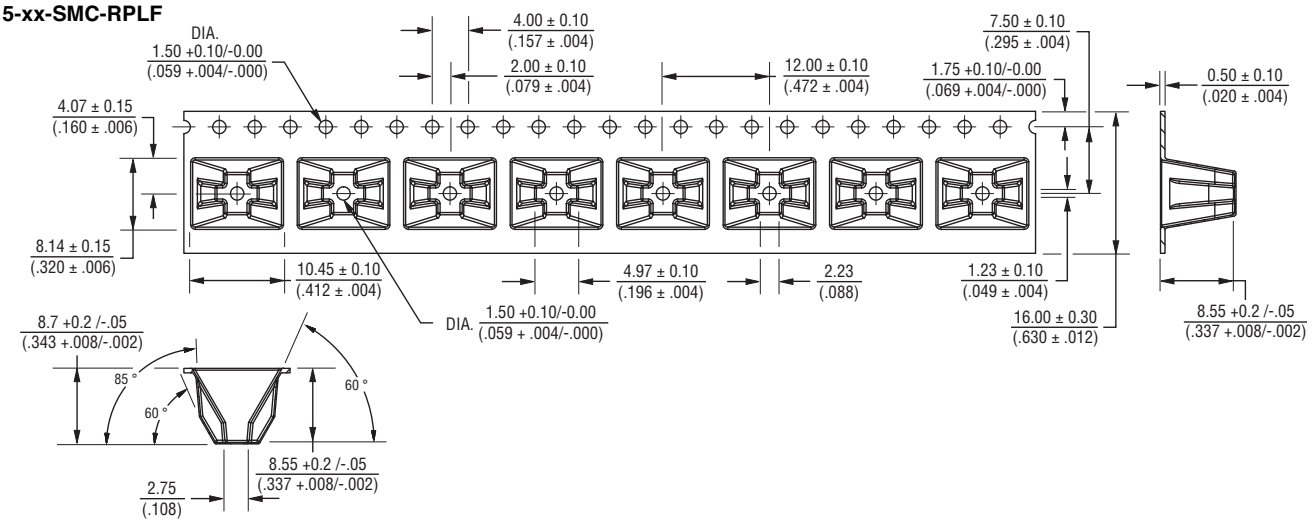


### 2015-xx-SMH-RPLF
### 2015-xx-A-RPLF

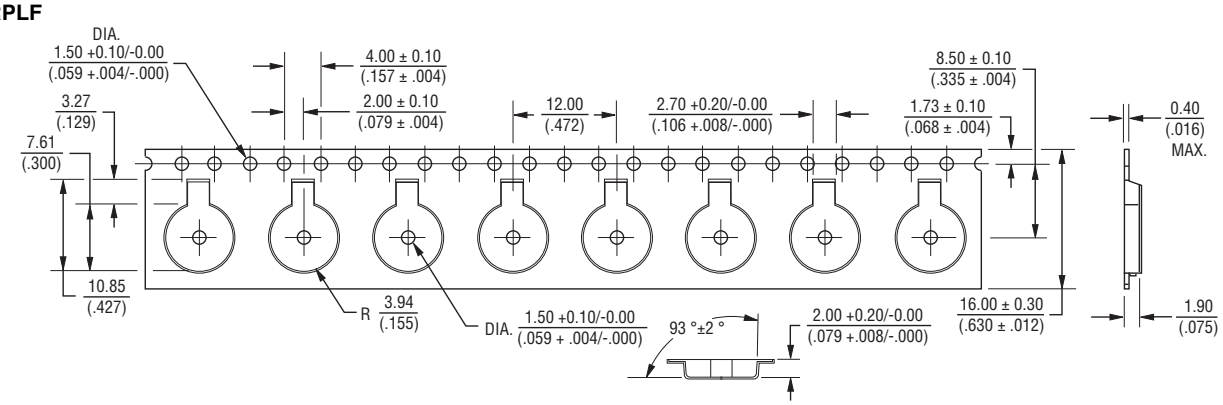




Specifications are subject to change without notice.
The device characteristics and parameters in this data sheet can and do vary in different applications and actual device performance may vary over time.
Users should verify actual device performance in their specific applications.