PART NAME	NEMA 4 ENCLOSURE	PART No.	AN-1300 & AN-1300-G

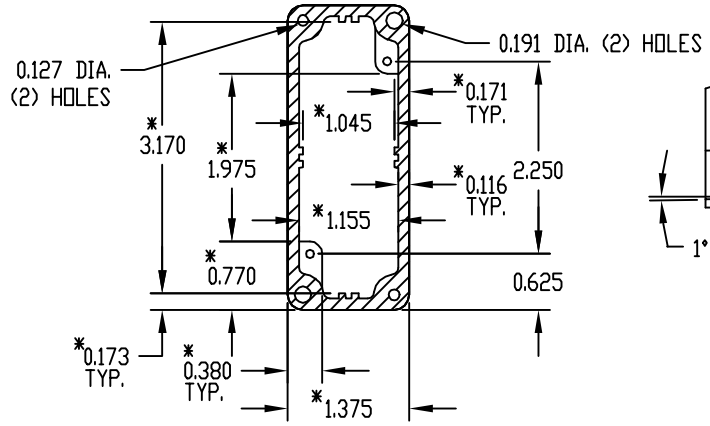

SECTION 'C-C'
* DIMENSIONS ARE AT BOTTOM OF ENCLOSURE

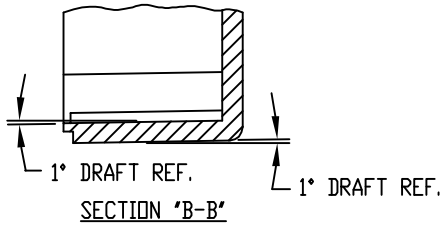

SECTION 'B-B'

MATERIAL: ALUMINUM ALLOY #A380

FINISH: NATURAL (NO SUFFIX)
GRAY (SUFFIX -G)

FOUR (4) M3 x 10mm (0.393") LG. SCREWS SUPPLIED FOR ASSEMBLY.

TWO (2) M3.5 x 6mm LG. NICKEL PLATED SCREWS AND WASHERS SUPPLIED FOR GROUNDING

ALL DIMENSIONS HAVE ±0.015 TOLERANCE UNLESS OTHERWISE SPECIFIED

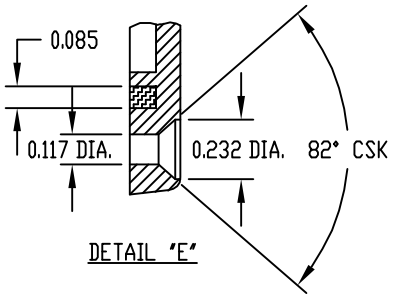

DETAIL 'E'

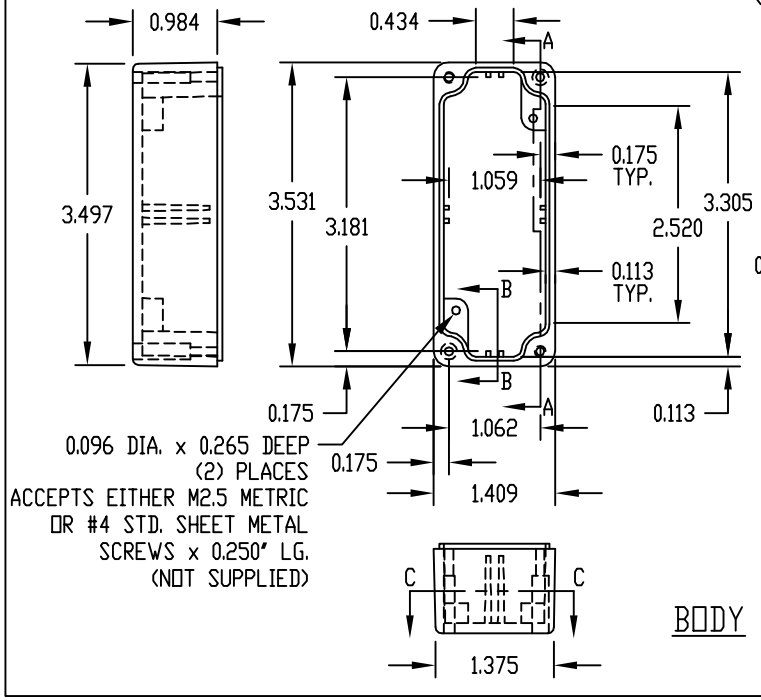

BODY

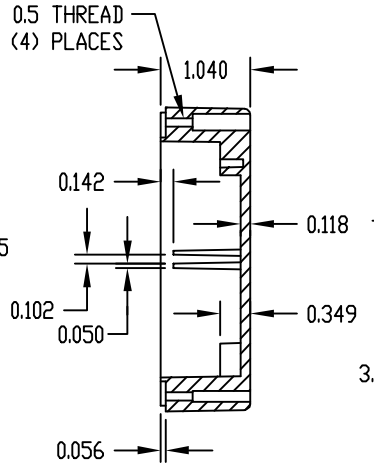

SECTION 'A-A'

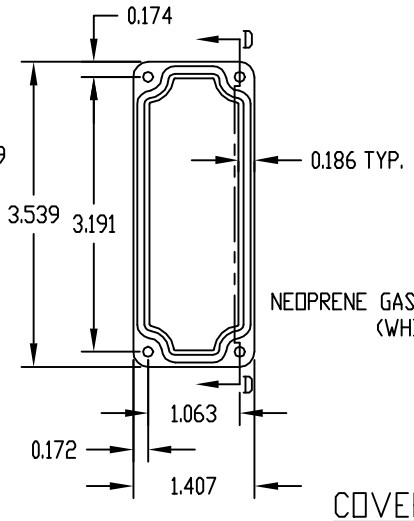

COVER

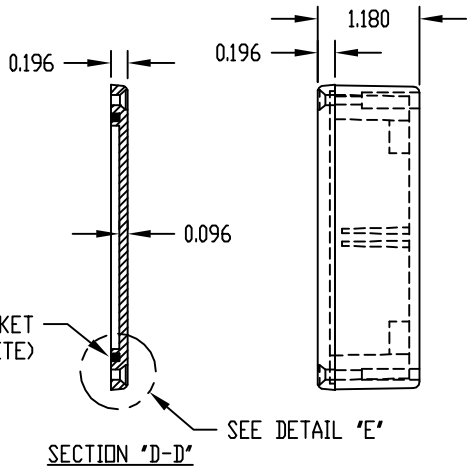

SECTION 'D-D'