PART NAME	NEMA 4X ENCLOSURE	PART No.	AN-1315, AN-1315-G, AN-2815 & AN-2815-B	REV. DATE	2-12-04

MATERIAL: ALUMINUM ALLOY #ADC-10

FINISH: NATURAL (NO SUFFIX)
GRAY (SUFFIX -G)
SMOOTH BLACK (SUFFIX -B)

FOUR (4) M4 x 20mm (0.787") LG. SCREWS SUPPLIED FOR ASSEMBLY.

TWO (2) M3.5 x 6mm LG. NICKEL PLATED SCREWS AND WASHERS SUPPLIED FOR GROUNDING

ALL DIMENSIONS HAVE ±0.015 TOLERANCE UNLESS OTHERWISE SPECIFIED

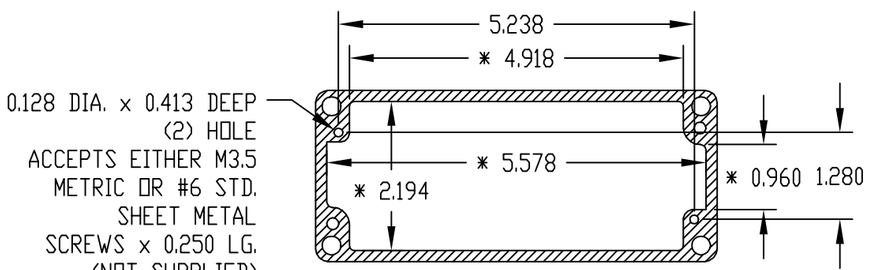

SECTION "B-B"
* DIMENSIONS ARE AT BOTTOM OF ENCLOSURE

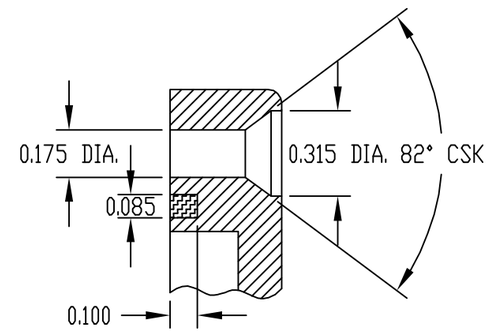

DETAIL "D"
(4 PLACES)

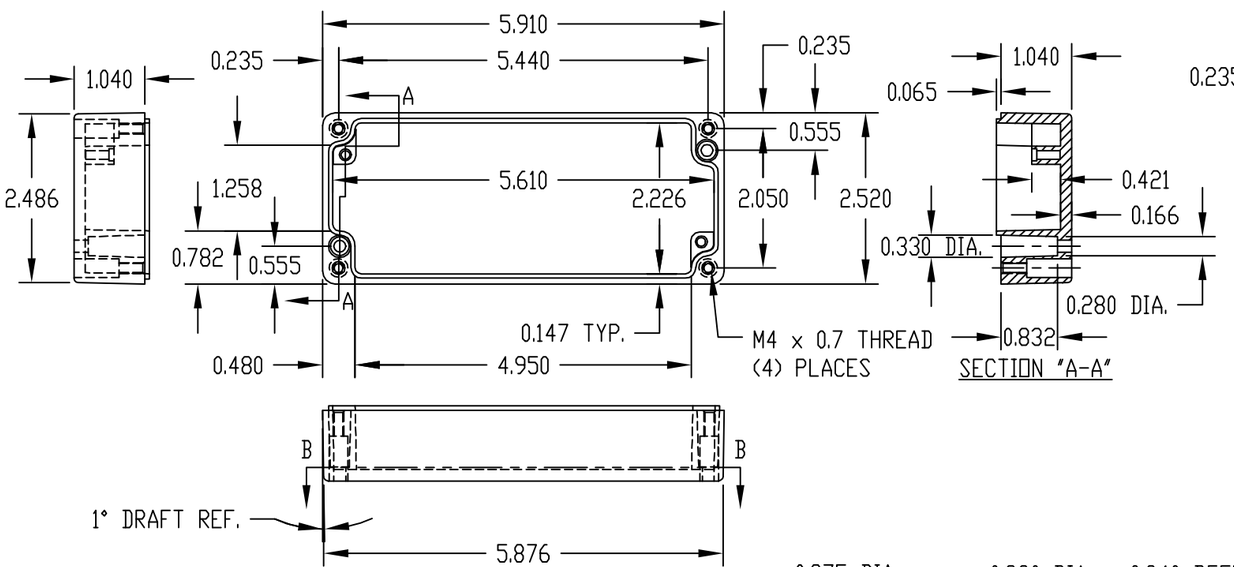

SECTION "A-A"

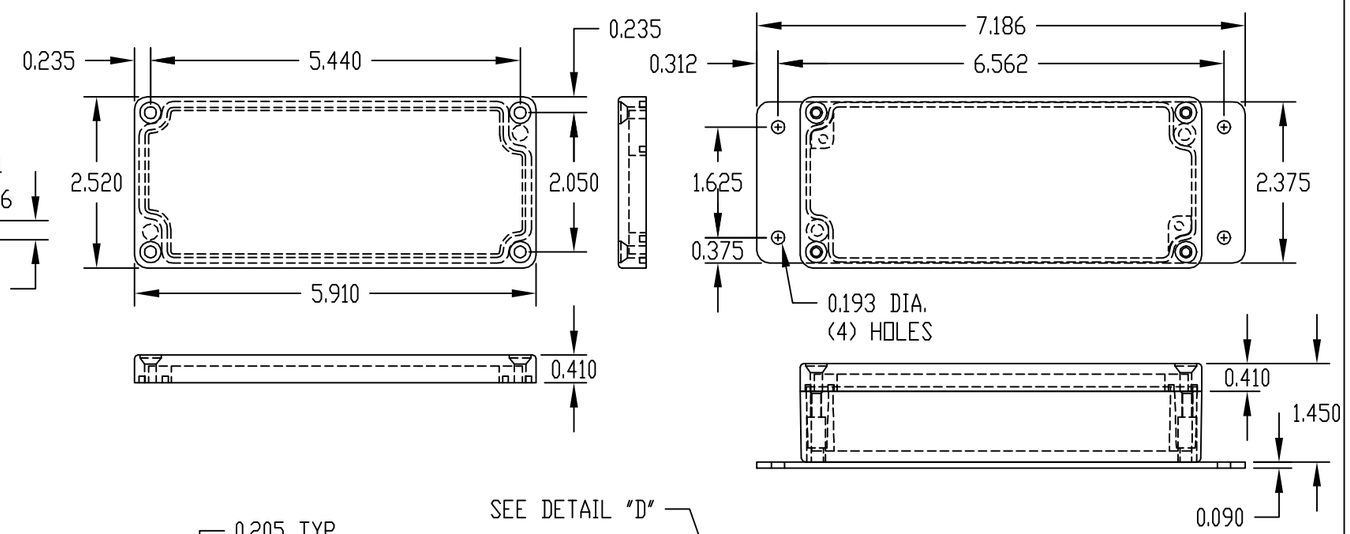

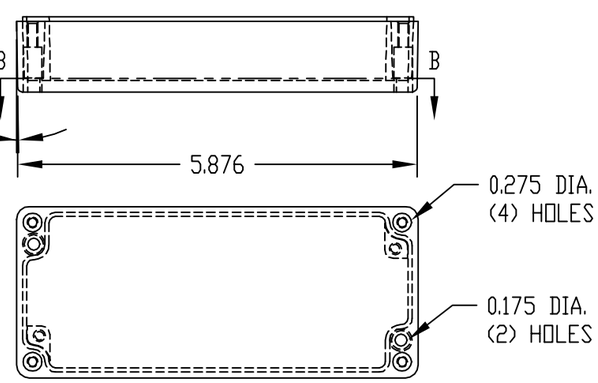

BODY

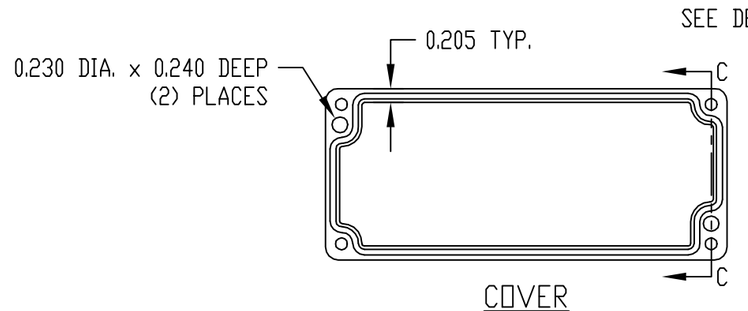

COVER

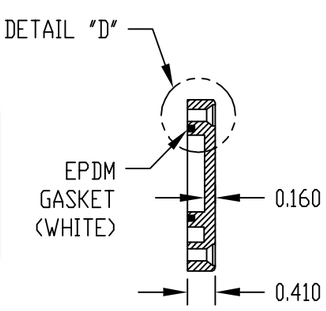

SECTION "C-C"

PART NO. AN-2815 & AN-2815-B ARE SUPPLIED WITH A WELDED ON MOUNTING BRACKET ONLY.