REV.	ECN NO.	DESCRIPTION	SIGN	DATE
C1	N/A	INITIAL DRAWING	Liu	2019/08/13

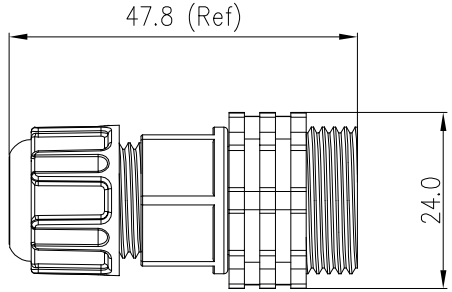

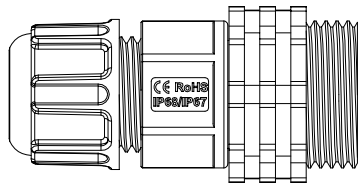

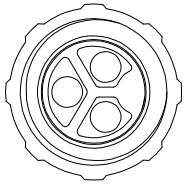

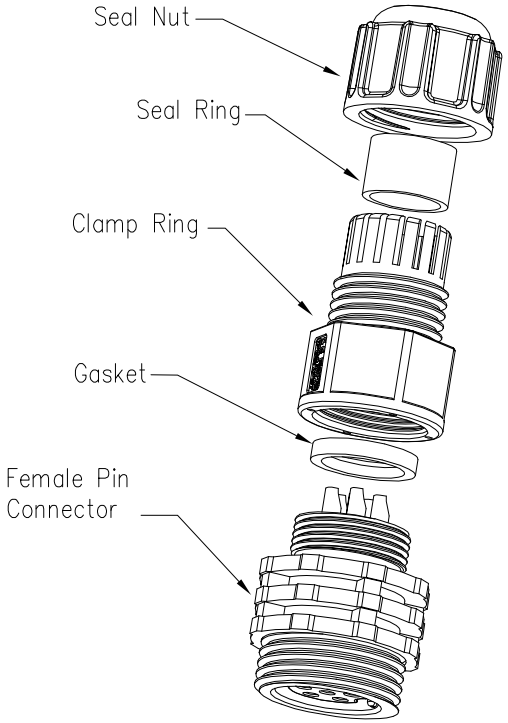

23XXX411-XX

Pin Number

Cable Range OD
01 OD: ϕ3.5mm~ϕ6.5mm
02 OD: ϕ6.5mm~ϕ9.5mm

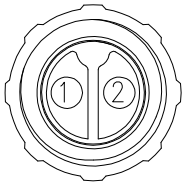	
2 Pin	3 Pin
P/N: 23002411-XX	P/N: 23003411-XX
Pin Assignments Front View	

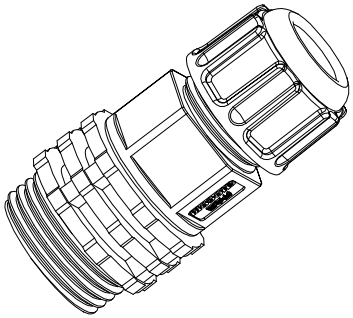

Specification:
1.Operation Temperature: -45°C~105°C.
2.Insulation Resistance: 100MΩ at DC500V.
3.Contact Resistance: <10mΩ.
4.Withstand Voltage: 2000V AC
5.Operating Current: 20A
6.Operating Voltage: AC 300V
7.Waterproof Rate: IP67 (Mated)
8.Seal Nut: Nylon, Black
9.Seal Ring: Silicon, Black.
10.Clamp Ring: Nylon, Black
11.Gasket: Silicon, Red
12.Female Pin: Copper Alloy, Gold Plated
13.Connector: Nylon+GF, Black
14.RoHS Compliant.
15.UL Compliant.
16.Mating Cap: 806-00052-00

UNIT: mm	DESCRIPTION: Middle Series Screw Female Plug With Female Pin	CHOGORI®	PART NO: 23XXX411-XX	DRAWN BY: Liu	DATE: 2019/08/13
TOLERANCE: .X ±0.25, .XX ±0.15, .XXX ±0.05, ANGLES ±1°	SCALE: 1:1 / SHEET 1 OF 1		DWG NO	CHECKED BY: Mo	DATE: 2019/08/13
	REV: C1 / SIZE: A4 / * : Inspection Item		CUSTOMER	APPROVED BY: Panson	DATE: 2019/08/13

THIS INFORMATION IS CONFIDENTIAL AND IS DISCLOSED TO YOU ON CONDITION THAT NO FURTHER DISCLOSURE IS MADE BY YOU TO OTHER THAN CHOGORI PERSONNEL WITHOUT AUTHORIZATION FROM CHOGORI CORP.