REV.	ECN NO.	DESCRIPTION	SIGN	DATE
C1	N/A	INITIAL DRAWING	Liu	2019/08/13

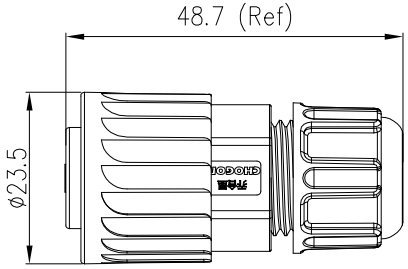

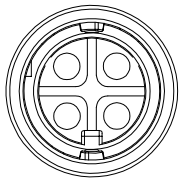

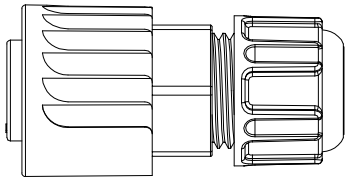

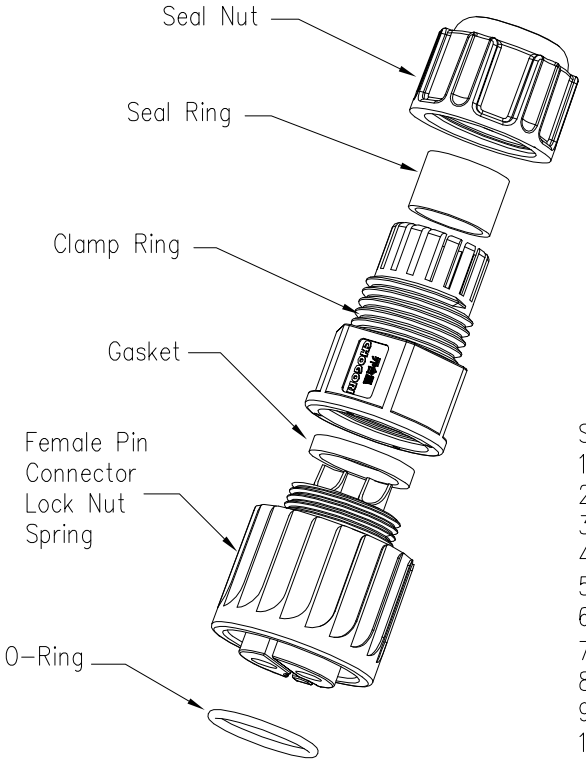

23XXX231-XX Cable Range OD
- 01 OD: ϕ3.5mm~ϕ6.5mm
- 02 OD: ϕ6.5mm~ϕ9.5mm

Pin Number

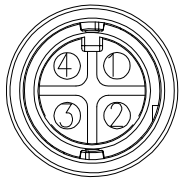

4 Pin

P/N: 23004231-XX

Pin Assignments
Front View

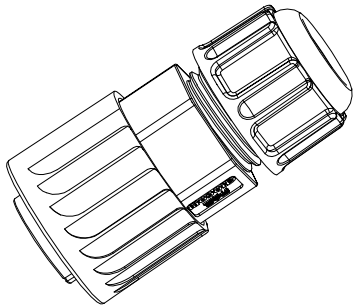

Specification:
1. Operation Temperature: −45°C~105°C.
2. Insulation Resistance: 100MΩ at DC500V.
3. Contact Resistance: <10mΩ.
4. Withstand Voltage: 2000V AC
5. Operating Current: 15A
6. Operating Voltage: AC 300V
7. Waterproof Rate: IP67 (Mated)
8. Seal Nut: Nylon, Black
9. Seal Ring: Silicon, Black.
10. Clamp Ring: Nylon, Black
11. .Gasket: Silicon, Red
12. Female Pin: Copper Alloy, Gold Plated
13. Connector: Nylon+GF, Black
14. Lock Nut: Nylon, Orange
15. Spring: SUS
16. O-Ring: Silicon, Red
17. RoHS Compliant.
18. Mating Cap: 804-00007-00

UNIT: mm	DESCRIPTION: Middle Series Push Lock Male Plug With Female Pin		PART NO: 23XXX231-XX	DRAWN BY: Liu	DATE: 2019/08/13
TOLERANCE: .X ±0.25, .XX ±0.15, .XXX ±0.05, ANGLES ±1°	SCALE: 1:1	SHEET 1 OF 1	DWG NO	CHECKED BY: Mo	DATE: 2019/08/13
	REV. C1	SIZE A4	CUSTOMER	APPROVED BY: Panson	DATE: 2019/08/13
		* : Inspection Item			

CHOGORI®

THIS INFORMATION IS CONFIDENTIAL AND IS DISCLOSED TO YOU ON CONDITION THAT NO FURTHER DISCLOSURE IS MADE BY YOU TO OTHER THAN CHOGORI PERSONNEL WITHOUT AUTHORIZATION FROM CHOGORI CORP.