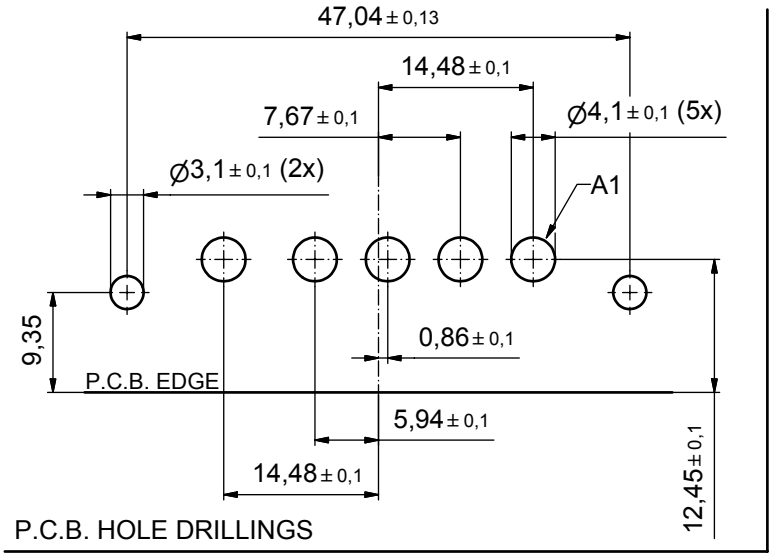

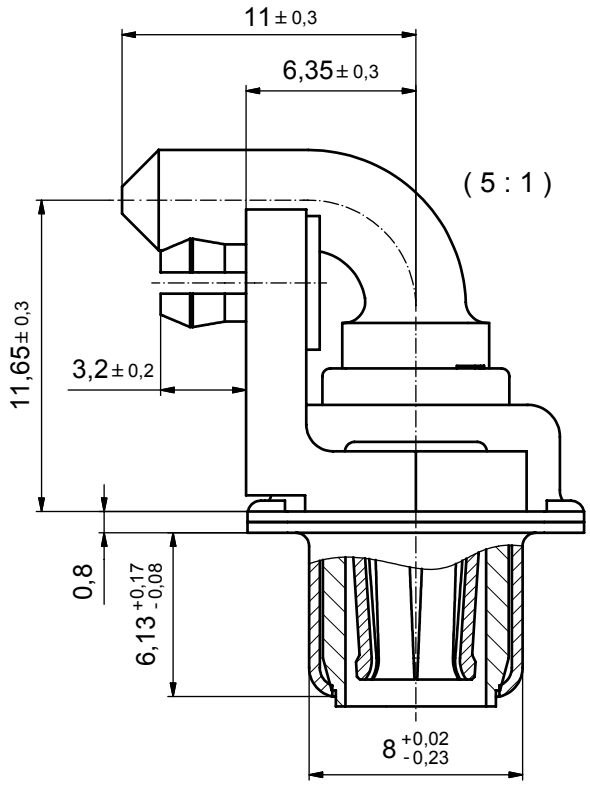

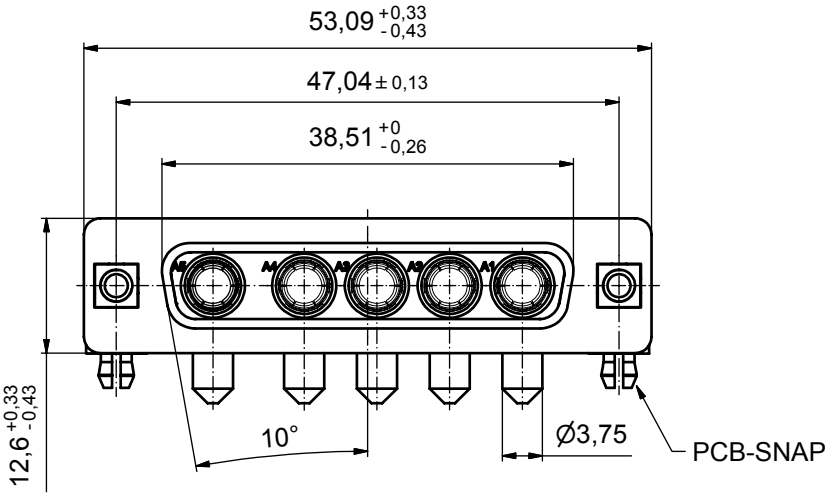

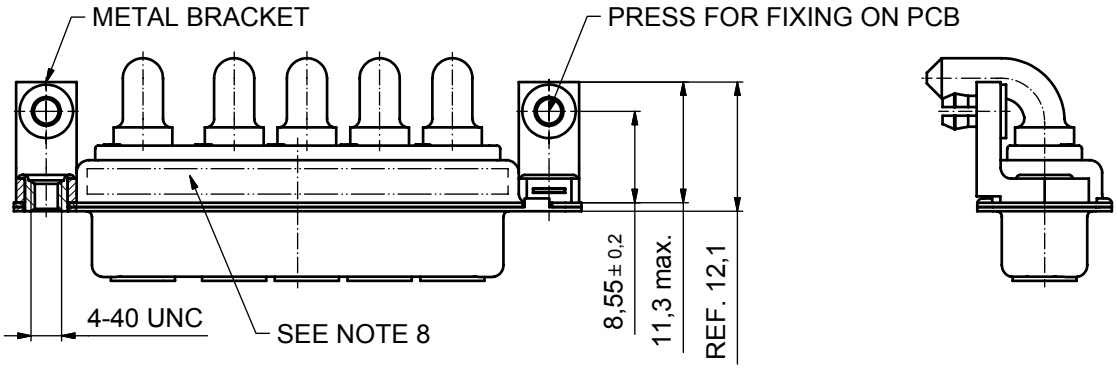

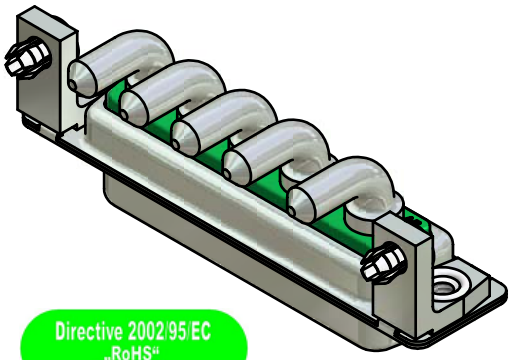

Directive 2002/95/EC „RoHS" Compliant

NOTES:

1. METALSHELLS: STEEL; min. 315µin TIN over 40-80µin NICKEL
2. INSULATORS: PBT GF UL 94 V-0, GREEN
3. HIGH POWER CONTACTS 40A: COPPER ALLOY
   PLATING MATING AREA: 30µin HARD GOLD over min. 50µin NICKEL
   PLATING TERMINATION SIDE: 160-240µin TIN over 80µin NICKEL
4. METAL BRACKET: ZINC DIE CAST; 300µin COPPER/40-120µin NICKEL/120-200µin TIN
5. THREADED INSERT: COPPER ALLOY; min. 200µin TIN over 80µin NICKEL
6. PCB-SNAP: COPPER ALLOY; min. 200µin TIN over 80µin NICKEL
   PCB-HOLE: ⌀3,1± 0,1mm; PCB-THICKNESS: 1,6mm
7. MAXIMUM TORQUE VALUE FOR THREAD: 6 in.LB
8. CONNECTOR IS PART MARKED: 3005W5SXX58N40X CONEC ABC

APPROVAL # FREIGABE # DEBLOCAGE # AUTORIZACION # APPROVAL
CUSTOMER APPROVAL DATE:
NAME: TITLE:
COMPANY NAME:

THIS DRAWING MAY NOT BE COPIED OR REPRODUCED IN ANY WAY, AND MAY NOT BE PASSED ON TO A THIRD PARTY WITHOUT WRITTEN PERMISSION. OWNERSHIP AND COPYRIGHT OF CONEC GmbH
DO NOT ALTER CAD DRAWING BY HAND

rev.	description	date	name
a	Origin		

finish: SEE NOTES
tolerance
dim. in mm

	date	name
drawn	28.02.07	Lehmenkühler
appd.	28.02.07	Mickenbecker
norm		
d-old		

scale: 2:1 (5:1)
material: SEE NOTES
title: D-SUB COM. FEMALE 90°
5W5S
with threaded insert, metal bracket and snap
dwg no: 13K1A1983
Inventor 10
DIN-A3
sh: 1
part no: 3005W5SXX58N40X

Downloaded from Arrow.com.