TOP VIEW

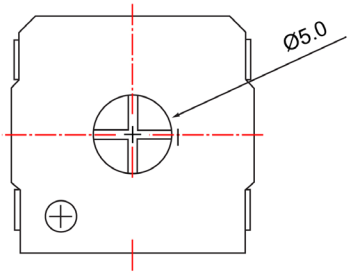

SIDE VIEW

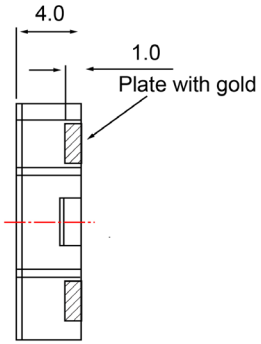

BOTTOM VIEW

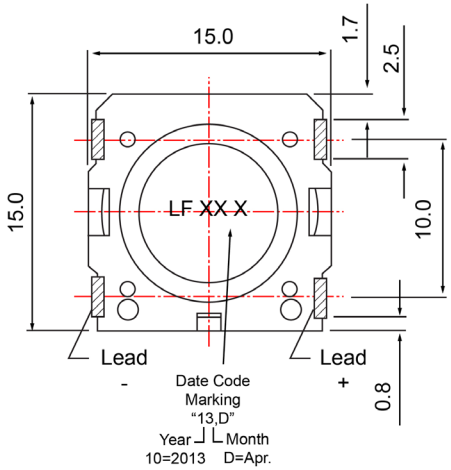

Specifications

Description	Value	Unit
Shape	Square	
Resonant Frequency	850	(Hz)
Frequency Range	850 ~ 20,000	(Hz)
SPL @ 10cm	87	(dBA)
Impedance	8	(Ohm)
Cone Material	Mylar	
Nominal Power	0.5	(W)
Max Power	0.8	(W)
Mount Type	Surface Mount	
Operating Temperature	- 30 ~ + 85	°C
Storage Temperature	- 40 ~ + 85	°C
Weight	1.5	(g)

Notes

1) All dimensions are in mm unless otherwise noted
2) All parts meet RoHS

DB UNLIMITED

Revision History

Version	Description	Date	Approved
1	Released from Engineering	2/6/2014	J.S

Drawn by	Date	Checked by	Date	Approved by	Date
G.W.	10/31/2013	C.E.	10/21/2013	J.S	2/6/2014

Surface Mount Speaker

SM150808-2

sales@dbunlimitedco.com | www.dbunlimitedco.com
©2013, DB Unlimited