RS3A/B - RS3M/B

3.0A SURFACE MOUNT FAST RECOVERY RECTIFIER

Please click here to visit our online spice models database.

Features

- Glass Passivated Die Construction
- Fast Recovery Time for High Efficiency
- Surge Overload Rating to 100A Peak
- Ideally Suited for Automatic Assembly
- **Lead Free Finish/RoHS Compliant (Note 4)**

Mechanical Data

- Case: SMB, SMC
- Case Material: Molded Plastic. UL Flammability Classification Rating 94V-0
- Moisture Sensitivity: Level 1 per J-STD-020C
- Terminals: Lead Free Plating (Matte Tin Finish). Solderable per MIL-STD-202, Method 208 e3
- Polarity: Cathode Band or Cathode Notch
- Marking Information: See Page 3
- Ordering Information: See Page 3
- Weight: SMB 0.093 grams (approximate)
  SMC 0.21 grams (approximate)

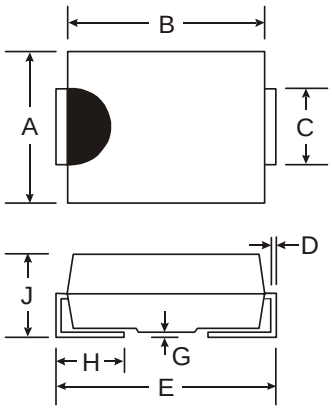

Dim	SMB		SMC	
	Min	Max	Min	Max
A	3.30	3.94	5.59	6.22
B	4.06	4.57	6.60	7.11
C	1.96	2.21	2.75	3.18
D	0.15	0.31	0.15	0.31
E	5.00	5.59	7.75	8.13
G	0.10	0.20	0.10	0.20
H	0.76	1.52	0.76	1.52
J	2.00	2.62	2.00	2.62
All Dimensions in mm				

AB, BB, DB, GB, JB, KB, MB Suffix Designates SMB Package
A, B, D, G, J, K, M Suffix Designates SMC Package

Maximum Ratings and Electrical Characteristics

@T_A = 25°C unless otherwise specified

Single phase, half wave, 60Hz, resistive or inductive load.
For capacitive load, derate current by 20%.

Characteristic	Symbol	RS3 A/AB	RS3 B/BB	RS3 D/DB	RS3 G/GB	RS3 J/JB	RS3 K/KB	RS3 M/MB	Unit
Peak Repetitive Reverse Voltage Working Peak Reverse Voltage DC Blocking Voltage (Note 5)	V_{RRM} V_{RWM} V_R	50	100	200	400	600	800	1000	V
RMS Reverse Voltage	$V_{R(RMS)}$	35	70	140	280	420	560	700	V
Average Rectified Output Current @ T_T = 75°C	I_O	3.0							A
Non-Repetitive Peak Forward Surge Current 8.3ms Single Half Sine-Wave Superimposed on Rated Load	I_{FSM}	100							A
Forward Voltage @ I_F = 3.0A	V_{FM}	1.3							V
Peak Reverse Current @ T_A = 25°C at Rated DC Blocking Voltage (Note 5) @ T_A = 125°C	I_{RM}	5.0 250							μA
Maximum Recovery Time (Note 3)	t_{rr}	150				250	500		ns
Typical Total Capacitance (Note 2)	C_T	50							pF
Typical Thermal Resistance Junction to Terminal (Note 1) SMB SMC	$R_{\theta JT}$	25 11							°C/W
Operating and Storage Temperature Range	T_j, T_{STG}	-65 to +150							°C

Notes:
1. Thermal Resistance: Junction to terminal, unit mounted on PC board with 5.0 mm^2 (0.013 mm thick) copper pads as heat sink.
2. Measured at 1.0MHz and applied reverse voltage of 4.0V DC.
3. Reverse recovery test conditions: I_F = 0.5A, I_R = 1.0A, I_{rr} = 0.25A. See Figure 5.
4. RoHS revision 13.2.2003. Glass and high temperature solder exemptions applied, see *EU Directive Annex Notes 5 and 7.*
5. Short duration pulse test used to minimize self-heating effect.

© Diodes Incorporated

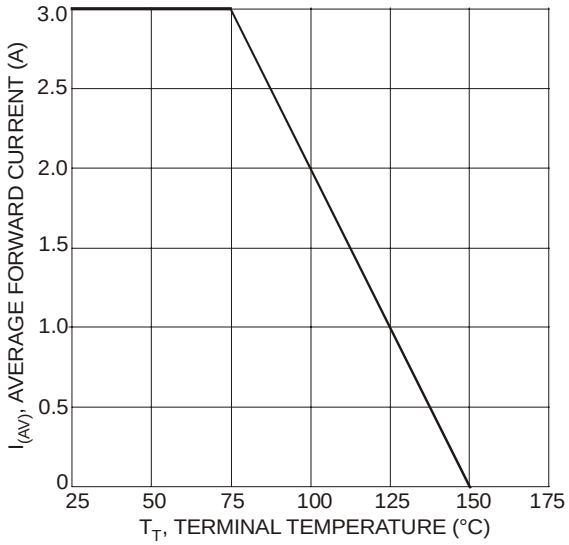

Fig. 1 Forward Current Derating Curve

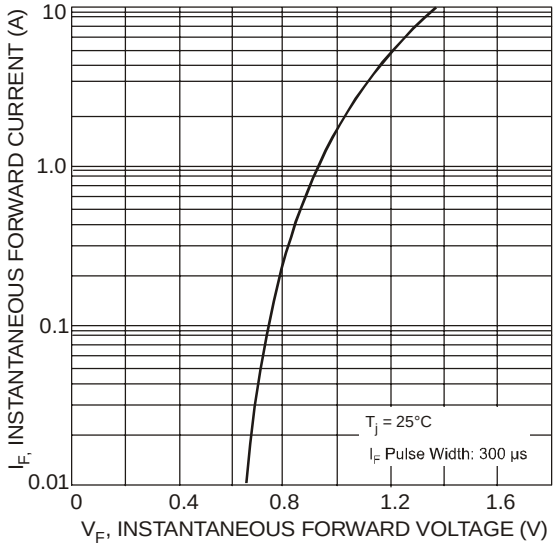

Fig. 2 Typical Forward Characteristics

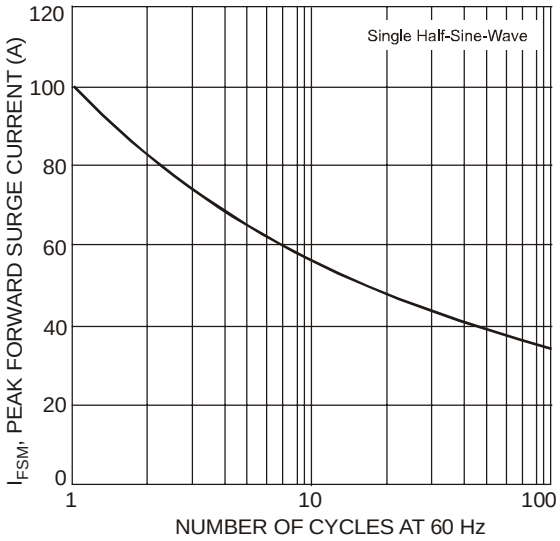

Fig. 3 Forward Surge Current Derating Curve

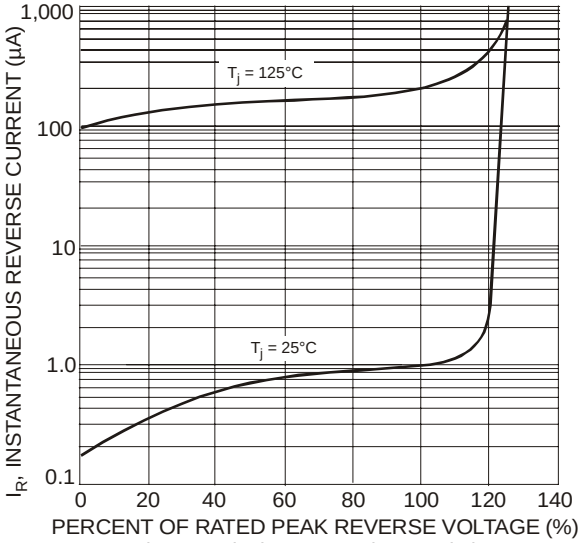

Fig. 4 Typical Reverse Characteristics

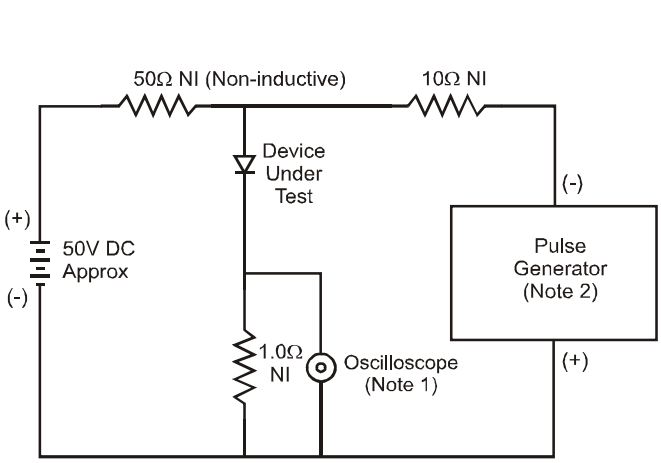

Notes:
1. Rise Time = 7.0ns max. Input Impedance = 1.0MΩ, 22pF.
2. Rise Time = 10ns max. Input Impedance = 50Ω.

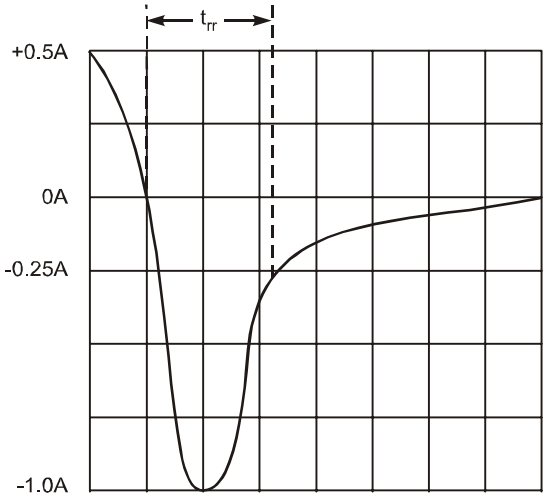

Set time base for 50/100 ns/cm

Fig. 5 Reverse Recovery Time Characteristic and Test Circuit

© Diodes Incorporated

Ordering Information (Note 6)

Device*	Packaging	Shipping
RS3x-13-F	SMC	3000/Tape & Reel
RS3xB-13-F	SMB	3000/Tape & Reel

* x = Device type, e.g. RS3A-13-F (SMC package); RS3AB-13-F (SMB package).

Notes: 6. For packaging details, go to our website at http://www.diodes.com/datasheets/ap02007.pdf.

Marking Information

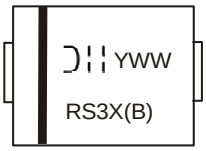

RS3X = Product type marking code, ex: RS3A (SMC package)
RS3XB = Product type marking code, ex: RS3AB (SMB package)
= Manufacturers' code marking
YWW = Date code marking
Y = Last digit of year ex: 2 for 2002
WW = Week code 01 to 52

IMPORTANT NOTICE

Diodes Incorporated and its subsidiaries reserve the right to make modifications, enhancements, improvements, corrections or other changes without further notice to any product herein. Diodes Incorporated does not assume any liability arising out of the application or use of any product described herein; neither does it convey any license under its patent rights, nor the rights of others. The user of products in such applications shall assume all risks of such use and will agree to hold Diodes Incorporated and all the companies whose products are represented on our website, harmless against all damages.

LIFE SUPPORT

Diodes Incorporated products are not authorized for use as critical components in life support devices or systems without the expressed written approval of the President of Diodes Incorporated.

© Diodes Incorporated