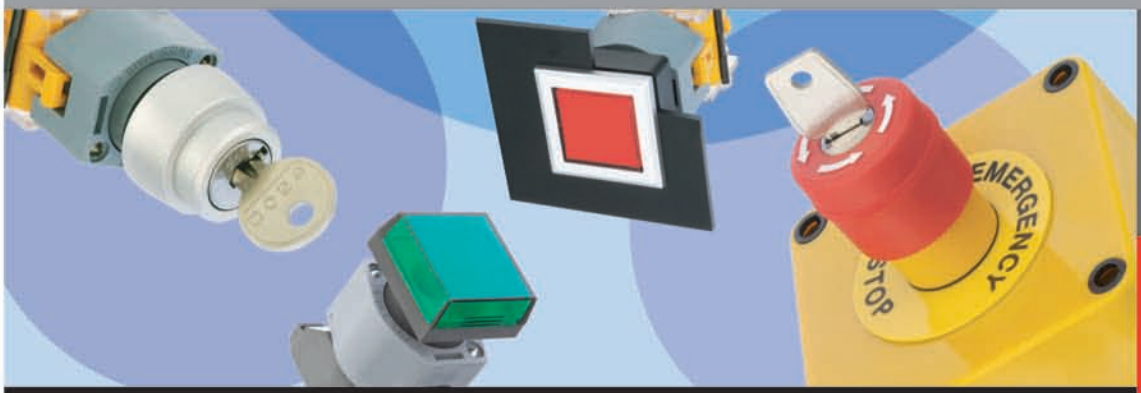

EAO Product Information

Series 04

eao

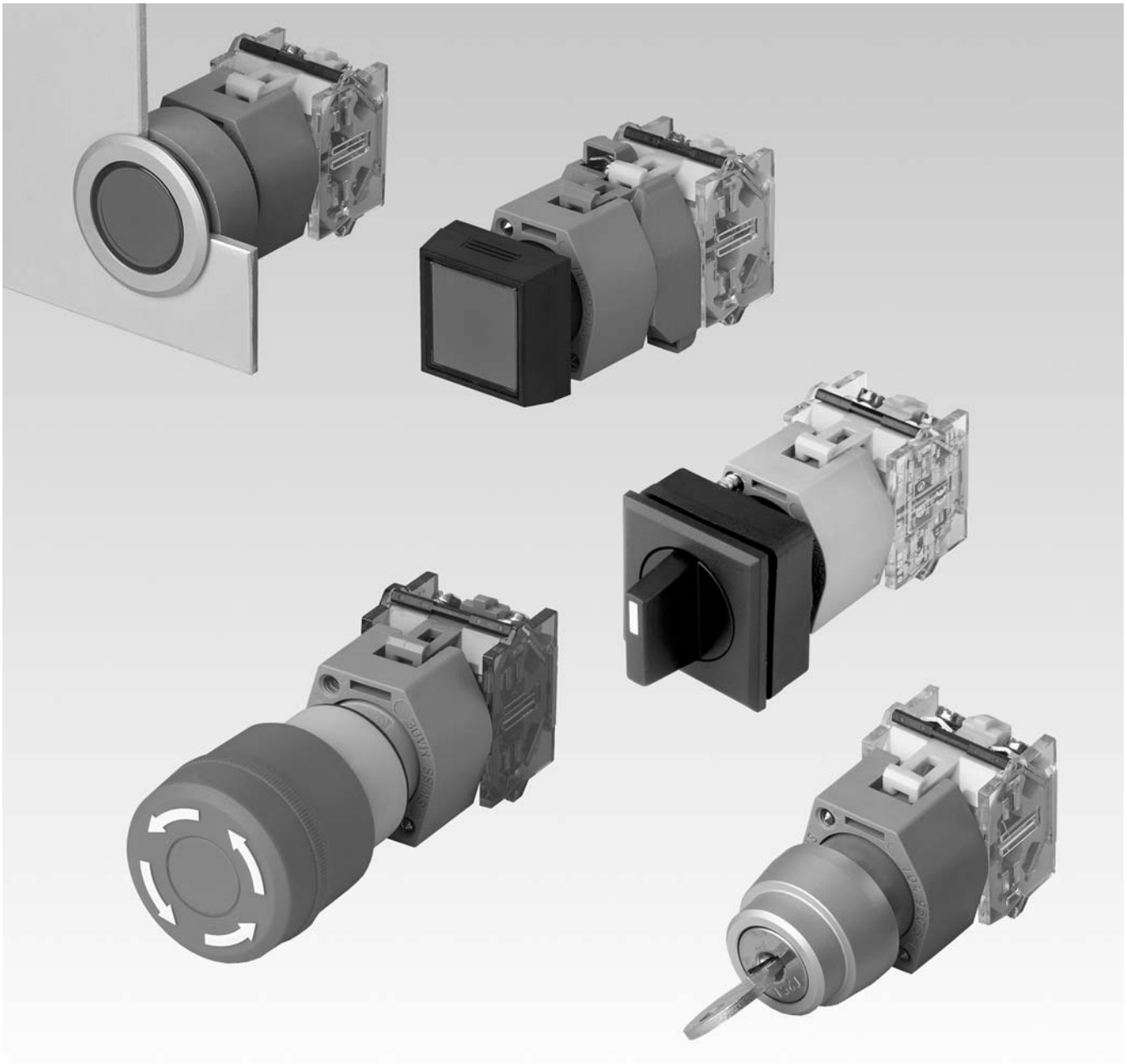

Contents

Description 3

Product Assembly 4

Mounting instruction 10

Devices raised mounting 12

Devices flush mounting 31

Accessories 47

Spare Parts 62

Technical Data 75

Typical Applications 80

Marking 81

Drawings 86

Index 116

Product Information

General notes
Series 04, a modular switching system, offers users a wide range of possible combinations. A broad variety of actuators is available, round or square in shape, for use as pushbuttons, keylock switches or lever-operated switches and indicators.
Other special actuators, such as mushroom heads or emergency-stop pushbuttons and buzzers can also be supplied.
Max. 3 switching elements, as snap-action or slow-make switches, can be clipped as modules to each actuator. Each switching element is equipped with 1 or 2 independent switching systems with normally closed or normally open contact.
Anodized aluminium parts can have visible variations due production-technical reasons.

Mounting
The series 04 pushbuttons and switches in raised version are mounted in a 22.5 mm dia. cut-out or with appropriate adapter in 30.5 mm dia. mounting hole.
Flush mounted devices have a 30.5 mm dia. cutout or 30 x 30 mm.

Terminals
The switching elements and the lamp blocks can be supplied with srew- or plug-in terminals.

Lenses
Lenses of transperent plasric or aluminium are available in various standard colours.

Marking
For further information about engraving, hot stamping and film inserts see part Marking.

Illumination
The BA9s incandescent (filament) lamp (6, 12, 24, 36, 48, 60, 110, 130 V) ensures perfect illumination of the lenses, which are supplied in various colours.
BA9s Single-Chip LED (6, 12, 24, 28, 48 V) are also available in blue, green, red, white or yellow.
Luminosity and wave length scattering caused by the technology used in the LED manufacturing processes may lead to visual differences in our products.

Position indication
The status of a maintained action switch can be determinded by the position of the lens.

Keylock switch
Standard lock number is 251, the last digit of Typ-Nr. = 0
(example : 704.335.**0**).
Additional lock numbers are available : 252 last digit = 1; 253 last digit = 2; 254 last digit = 3; 255 last digit = 4; 256 last digit = 5; 257 last digit = 6; 259 last digit = 8; 260 last digit = 9.
Two keys are supplied with each keylock switch.

Keyinsert switch 704.095.0T28
EAO worked with the German Railways to develop an incredibly strong key-insert switch, which allows the conductor to close all the train's doors at the same time from any door using so called 'remote closing'. The switch, which has a 'massive' all-stainless steel construction, was modified from EAO's standard Series 04 switch to actuate the remote closing function with a single twist of the conductor's key; he can cancel or 'revoke' the remote closing with another twist of the key.
The important difference in the EAO design and the design of the switch they used previously is that it separates the function according to direction; accidental operation far less likely - twist one way for remote closing, twist the other way to cancel the remote closing.
The switch has a mechanical liftime of 150 000 cycles and is incredibly durable to withstand the repeated use that might be necessary on every yourney.

Rotary selector switch
The rotary selector switch of series 04 are ideal control- and instrument switches. The switch types (CG4-1) are suitable particularly for switching of low tension. They correspond to the regulations after EN IEC 60947-3 and VDE 0660-Part 3.
By the special axial arrangement of the connecting terminals it is possible to mount the switches side by side or next to the cable duct. The contact marking remains well visible also in the mounted position. The required space of these switches is very small.

Number structure
Nomenclature in accordance with ' CENELEC Certificate '. The certification document we dispatch to them on demands.

Specimen order

Illuminated pushbutton :

- Illuminiated pushbutton actuator, 30 x 30 mm Momentary action Front ring plastic black Lens plastic blue	704.229.6

Essential accessories :

- Single-Chip LED BA9s, 24 VAC/DC, blue	10-2512.1146
- Switching element, snap-action 1 NC + 1 NO, hard silver srew terminal	704.900.5

We reserve the right to modify technical data
All dimensions in mm

Pushbutton, raised mounting

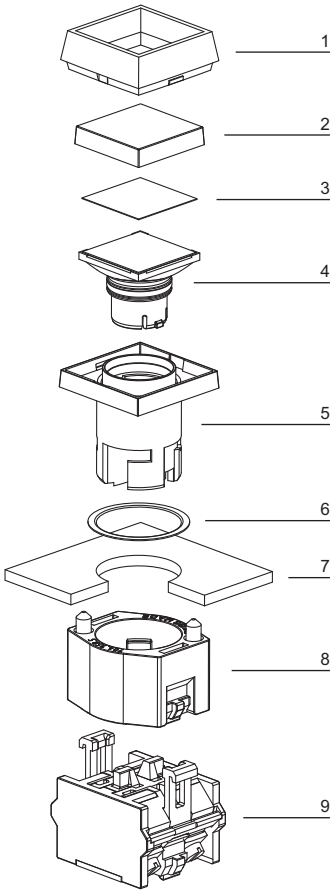

1 Front bezel
2 Lens
3 Marking foil
4 Lens holder
5 Actuator housing
6 Sealing
7 Front plate
8 Bayonet flange
9 Switching element

Emergency-stop pushbutton

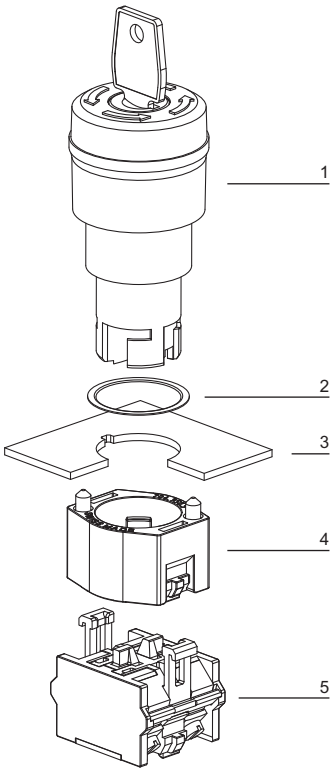

1 Emergency-stop pushbutton actuator
2 Sealing
3 Front plate
4 Bayonet flange
5 Switching element

Keylock switch, raised mounting

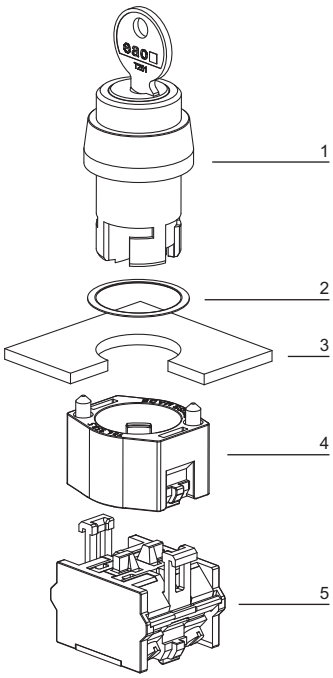

1 Keylock switch actuator
2 Sealing
3 Front plate
4 Fixing nut
5 Switching element

Rotary selector switch, raised mounting

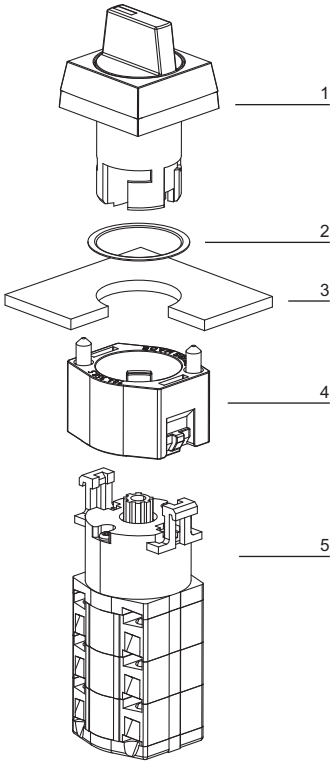

1 Rotary selector switch actuator
2 Sealing
3 Front plate
4 Bayonet flange
5 Rotary switch element

Indicator, flush mounting

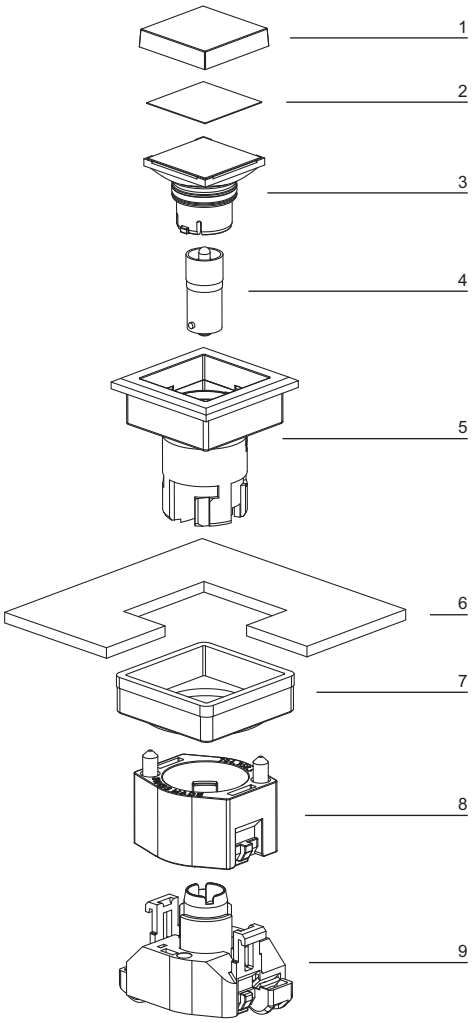

1 Lens
2 Marking foil
3 Lens holder
4 LED
5 Actuator housing
6 Front plate
7 Pressure ring
8 Bayonet flange
9 Lamp element

Pushbutton illuminated, flush mounting

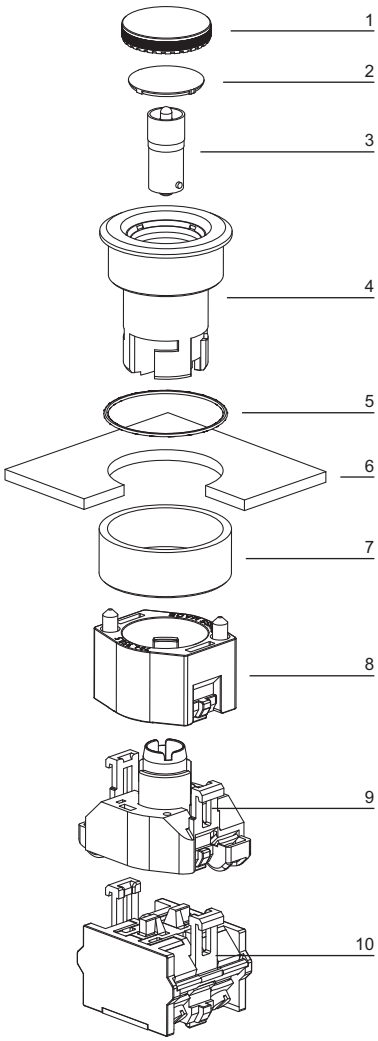

1 Lens
2 Marking plate
3 LED
4 Actuator housing
5 Sealing
6 Front plate
7 Pressure ring
8 Bayonet flange
9 Lamp element
10 Switching element

Selector switch, flush mounting

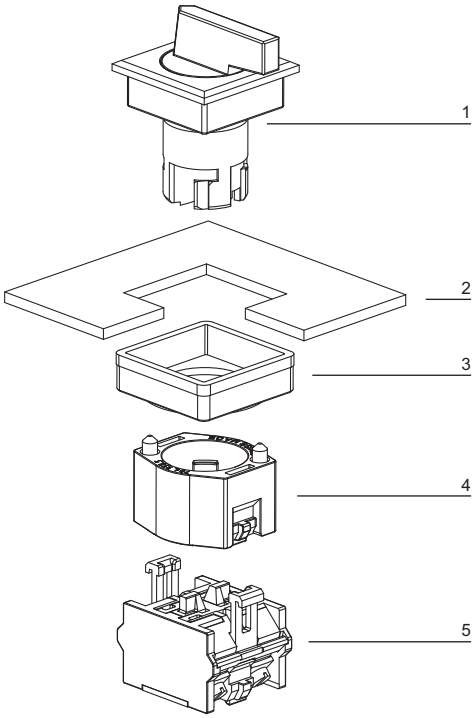

1 Selector switch actuator
2 Front plate
3 Pressure ring
4 Bayonet flange
5 Switching element

Pushbutton

The actuator is inserted from the front through the mounting hole and locked at the rear by twisting the boyonet flange. The switch is fixed and positioned by evenly tightening the two screws in the mounting flange to a max. torque of 25 ... 30 Ncm. A reducing ring can be used to fit 22.5 mm into a 30.5 mm hole.

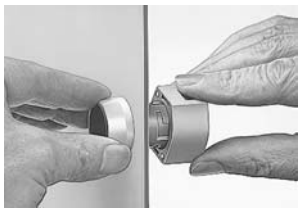

The switching elements (max. 3) or transformers, E-stop (max. 2), can easily be snapped in position without tools. LED's or filament lamps, as well as marking plates can be inserted or fitted from the front.

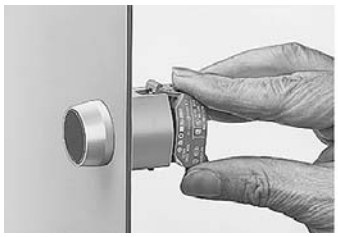

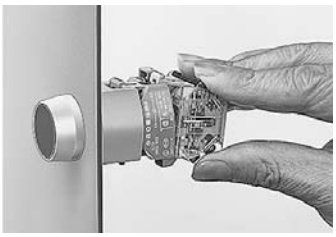

We can supply switching elements with terminal labels inserted.

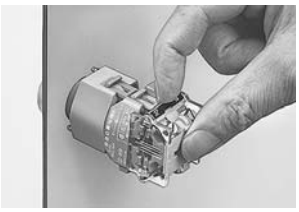

To dismantle the switching elements or transformers one arm of the snap-on system is eased up with a screwdriver so that the snapped-on parts can easily removed.

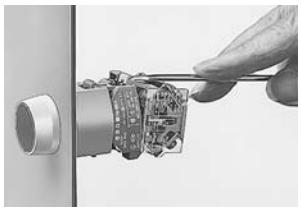

Rotary selector switch

Actuator

Step 1
Mounting of the actuator element:

1. Insert actuator from the front into the mounting hole.

2. Push mounting flange onto the actuator from the back and latch with bayonet.

3. Screw flange on with the two threaded pins.

4. Put lever into reference position (nine o'clock).

Rotary switch element

Step 2
Snap rotary switch onto the actuator:

1. First check switch number with circuit diagram.

2. Put switching position of the cam at nine o'clock.

3. Snap rotary switch element onto the mounting flange, pay attention to position of the driver.

4. Check to see that the two snap-action legs have engaged.

5. Check the switching action in accordance with the switching sequence.

Indicator full-face illumination compact

Essential Accessories:

Single-LED page 56

	Front protection	Terminals	Lens cap	Ø 29 mm Typ-Nr.	Mounting dimensions	Technical drawing	Circuit drawing	kg
Indicator full-face illumination compact Filament lamp 130 V, max. 2.6 W with integrated series resistor 230/130 V Marking cap white translucent	IP 65	ST	Plastic blue translucent	**704.022.6**	3	2	53	0.025
			Plastic colourless translucent	**704.022.7**	3	2	53	0.025
			Plastic green translucent	**704.022.5**	3	2	53	0.025
			Plastic red translucent	**704.022.2**	3	2	53	0.025
			Plastic yellow translucent	**704.022.4**	3	2	53	0.025
Filament lamp 60 V, max. 2.6 W with integrated series resistor 125/60 V Marking cap white translucent	IP 65	ST	Plastic blue translucent	**704.024.6**	3	2	53	0.025
			Plastic colourless translucent	**704.024.7**	3	2	53	0.025
			Plastic green translucent	**704.024.5**	3	2	53	0.025
			Plastic red translucent	**704.024.2**	3	2	53	0.025
			Plastic yellow translucent	**704.024.4**	3	2	53	0.025
Filament lamp max. 2.6 W or LED Marking cap white translucent	IP 65	ST	Plastic blue translucent	**704.020.6**	3	2	6	0.020
			Plastic colourless translucent	**704.020.7**	3	2	6	0.020
			Plastic green translucent	**704.020.5**	3	2	6	0.020
			Plastic red translucent	**704.020.2**	3	2	6	0.020
			Plastic yellow translucent	**704.020.4**	3	2	6	0.020
Marking plate colourless transparent ribbed	IP 65	ST	Plastic blue transparent	**704.021.6**	3	2	6	0.020
			Plastic colourless transparent	**704.021.7**	3	2	6	0.020
			Plastic green transparent	**704.021.5**	3	2	6	0.020
			Plastic red transparent	**704.021.2**	3	2	6	0.020
			Plastic yellow transparent	**704.021.4**	3	2	6	0.020

Terminals: ST = Screw terminal

Mounting dimensions from page 86, Technical drawing from page 90, Circuit drawing from page 109

Indicator full face illumination

Essential Accessories:

Single-LED page 56

	Front protection	Terminals	Lens cap	⧈ 30 x 30 mm Typ-Nr.	Ø 29 mm Typ-Nr.	Mounting dimensions	Technical drawing	Circuit drawing	kg
Indicator full face illumination Filament lamp or LED Marking plate white translucent	IP 65	ST	Plastic blue	**704.199.6**	**704.000.6**	5	3	6	0.050
				704.200.6	**704.000.6**	5	3	6	0.050
			Plastic colourless	**704.199.7**	**704.000.7**	5	3	6	0.050
				704.200.7	**704.000.7**	5	3	6	0.050
			Plastic green	**704.199.5**	**704.000.5**	5	3	6	0.050
				704.200.5	**704.000.5**	5	3	6	0.050
			Plastic red	**704.199.2**	**704.000.2**	5	3	6	0.050
				704.200.2	**704.000.2**	5	3	6	0.050
			Plastic yellow	**704.199.4**	**704.000.4**	5	3	6	0.050
				704.200.4	**704.000.4**	5	3	6	0.050
Marking cap colourless transparent ripped	IP 65	ST	Plastic blue		**704.001.6**	5	3	6	0.050
			Plastic colourless		**704.001.7**	5	3	6	0.050
			Plastic green		**704.001.5**	5	3	6	0.050
			Plastic red		**704.001.2**	5	3	6	0.050
			Plastic yellow		**704.001.4**	5	3	6	0.050

Terminals: ST = Screw terminal

Mounting dimensions from page 86, Technical drawing from page 90, Circuit drawing from page 109

Indicator front illumination

Essential Accessories:

Single-LED page 56

	Front protection	Terminals	Front ring	Lens	◻ 30 x 30 mm Typ-Nr.	Ø 29 mm Typ-Nr.	Mounting dimensions	Technical drawing	Circuit drawing	kg
Indicator front illumination Filament lamp or LED Marking plate white translucent	IP 65	ST	Plastic black	Plastic blue	**704.206.6**	**704.006.6**	5	5	6	0.050
				Plastic colourless	**704.206.7**	**704.006.7**	5	5	6	0.050
				Plastic green	**704.206.5**	**704.006.5**	5	5	6	0.050
				Plastic red	**704.206.2**	**704.006.2**	5	5	6	0.050
				Plastic yellow	**704.206.4**	**704.006.4**	5	5	6	0.050
			Plastic light-grey	Plastic blue	**704.202.6**	**704.002.6**	5	5	6	0.050
				Plastic colourless	**704.202.7**	**704.002.7**	5	5	6	0.050
				Plastic green	**704.202.5**	**704.002.5**	5	5	6	0.050
				Plastic red	**704.202.2**	**704.002.2**	5	5	6	0.050
				Plastic yellow	**704.202.4**	**704.002.4**	5	5	6	0.050
Marking plate colourless transparent ribbed	IP 65	ST	Plastic black	Plastic blue	**704.207.6**	**704.007.6**	5	5	6	0.050
				Plastic colourless	**704.207.7**	**704.007.7**	5	5	6	0.050
				Plastic green	**704.207.5**	**704.007.5**	5	5	6	0.050
				Plastic red	**704.207.2**	**704.007.2**	5	5	6	0.050
				Plastic yellow	**704.207.4**	**704.007.4**	5	5	6	0.050
			Plastic light-grey	Plastic blue	**704.203.6**	**704.003.6**	5	5	6	0.050
				Plastic colourless	**704.203.7**	**704.003.7**	5	5	6	0.050
				Plastic green	**704.203.5**	**704.003.5**	5	5	6	0.050
				Plastic red	**704.203.2**	**704.003.2**	5	5	6	0.050
				Plastic yellow	**704.203.4**	**704.003.4**	5	5	6	0.050

Terminals: ST = Screw terminal

Mounting dimensions from page 86, Technical drawing from page 90, Circuit drawing from page 109

Flasher full face illumination

Essential Accessories:

- Flasher element page 49
- Single-LED page 56

	Front protection	Lens cap	⧈ 30 x 30 mm Typ-Nr.	Ø 29 mm Typ-Nr.	Mounting dimensions	Technical drawing	Circuit drawing	⚖
Flasher full face illumination Filament lamp or LED Marking plate white translucent	IP 65	Plastic blue	**704.199.6**	**704.000.6**	5	6	6	0.050
			704.200.6	**704.000.6**	5	6	6	0.050
		Plastic colourless	**704.199.7**	**704.000.7**	5	6	6	0.050
			704.200.7	**704.000.7**	5	6	6	0.050
		Plastic green	**704.199.5**	**704.000.5**	5	6	6	0.050
			704.200.5	**704.000.5**	5	6	6	0.050
		Plastic red	**704.199.2**	**704.000.2**	5	6	6	0.050
			704.200.2	**704.000.2**	5	6	6	0.050
		Plastic yellow	**704.199.4**	**704.000.4**	5	6	6	0.050
			704.200.4	**704.000.4**	5	6	6	0.050
Marking cap colourless transparent ripped	IP 65	Plastic blue		**704.001.6**	5	6	6	0.050
		Plastic colourless		**704.001.7**	5	6	6	0.050
		Plastic green		**704.001.5**	5	6	6	0.050
		Plastic red		**704.001.2**	5	6	6	0.050
		Plastic yellow		**704.001.4**	5	6	6	0.050

Mounting dimensions from page 86, Technical drawing from page 90, Circuit drawing from page 109

Flasher front illumination

Essential Accessories:

Flasher element page 49
Single-LED page 56

	Front protection	Front ring	Lens	⧄ 30 x 30 mm Typ-Nr.	Ø 29 mm Typ-Nr.	Mounting dimensions	Technical drawing	Circuit drawing	kg
Flasher front illumination Filament lamp or LED Marking plate white translucent	IP 65	Plastic black	Plastic blue	**704.206.6**	**704.006.6**	5	7	6	0.050
			Plastic colourless	**704.206.7**	**704.006.7**	5	7	6	0.050
			Plastic green	**704.206.5**	**704.006.5**	5	7	6	0.050
			Plastic red	**704.206.2**	**704.006.2**	5	7	6	0.050
			Plastic yellow	**704.206.4**	**704.006.4**	5	7	6	0.050
		Plastic light-grey	Plastic blue	**704.202.6**	**704.002.6**	5	7	6	0.050
			Plastic colourless	**704.202.7**	**704.002.7**	5	7	6	0.050
			Plastic green	**704.202.5**	**704.002.5**	5	7	6	0.050
			Plastic red	**704.202.2**	**704.002.2**	5	7	6	0.050
			Plastic yellow	**704.202.4**	**704.002.4**	5	7	6	0.050
Marking plate colourless transparent ribbed	IP 65	Plastic black	Plastic blue	**704.207.6**	**704.007.6**	5	7	6	0.050
			Plastic colourless	**704.207.7**	**704.007.7**	5	7	6	0.050
			Plastic green	**704.207.5**	**704.007.5**	5	7	6	0.050
			Plastic red	**704.207.2**	**704.007.2**	5	7	6	0.050
			Plastic yellow	**704.207.4**	**704.007.4**	5	7	6	0.050
		Plastic light-grey	Plastic blue	**704.203.6**	**704.003.6**	5	7	6	0.050
			Plastic colourless	**704.203.7**	**704.003.7**	5	7	6	0.050
			Plastic green	**704.203.5**	**704.003.5**	5	7	6	0.050
			Plastic red	**704.203.2**	**704.003.2**	5	7	6	0.050
			Plastic yellow	**704.203.4**	**704.003.4**	5	7	6	0.050

Mounting dimensions from page 86, Technical drawing from page 90, Circuit drawing from page 109

Buzzer

	Front protection	Front cap	Terminals	Ø 29 mm Typ-Nr.	Mounting dimensions	Technical drawing	Circuit drawing	kg
Buzzer Operation voltage 24 VDC	IP 65	Brass nickel-plated	S1	**14-810.902**	5	18	1	0.016
		Plastic black	S1	**14-810.002**	5	18	1	0.016

Further information in the Technical Data and Typical Applications
Terminals: S1 = Soldering terminal (also pluggable 2.8 x 0.5 mm)
Mounting dimensions from page 86, Technical drawing from page 90, Circuit drawing from page 109

Pushbutton actuator

Essential Accessories:

Switching element page 50

	Front protection	Switching action	Front ring	Lens	◻ 30 x 30 Typ-Nr.	Ø 29 mm Typ-Nr.	Mounting dimensions	Technical drawing	Circuit drawing	kg
Pushbutton actuator	IP 65	MA	Plastic black	Plastic black	**704.239.0**	**704.039.0**	5	4	3	0.040
				Plastic blue	**704.239.6**	**704.039.6**	5	4	3	0.040
				Plastic colourless	**704.239.7**	**704.039.7**	5	4	3	0.040
				Plastic green	**704.239.5**	**704.039.5**	5	4	3	0.040
				Plastic red	**704.239.2**	**704.039.2**	5	4	3	0.040
				Plastic yellow	**704.239.4**	**704.039.4**	5	4	3	0.040
			Plastic light-grey	Plastic black	**704.240.0**	**704.040.0**	5	4	3	0.040
				Plastic blue	**704.240.6**	**704.040.6**	5	4	3	0.040
				Plastic colourless	**704.240.7**	**704.040.7**	5	4	3	0.040
				Plastic green	**704.240.5**	**704.040.5**	5	4	3	0.040
				Plastic red	**704.240.2**	**704.040.2**	5	4	3	0.040
				Plastic yellow	**704.240.4**	**704.040.4**	5	4	3	0.040
		M	Plastic black	Plastic black	**704.209.0**	**704.009.0**	5	4	4	0.040
				Plastic blue	**704.209.6**	**704.009.6**	5	4	4	0.040
				Plastic colourless	**704.209.7**	**704.009.7**	5	4	4	0.040
				Plastic green	**704.209.5**	**704.009.5**	5	4	4	0.040
				Plastic red	**704.209.2**	**704.009.2**	5	4	4	0.040
				Plastic yellow	**704.209.4**	**704.009.4**	5	4	4	0.040
			Plastic light-grey	Plastic black	**704.210.0**	**704.010.0**	5	4	4	0.040
				Plastic blue	**704.210.6**	**704.010.6**	5	4	4	0.040
				Plastic colourless	**704.210.7**	**704.010.7**	5	4	4	0.040
				Plastic green	**704.210.5**	**704.010.5**	5	4	4	0.040
				Plastic red	**704.210.2**	**704.010.2**	5	4	4	0.040
				Plastic yellow	**704.210.4**	**704.010.4**	5	4	4	0.040
		MA	Aluminium natural	Aluminium black		**704.041.0**	5	4	3	0.040
				Aluminium blue		**704.041.6**	5	4	3	0.040
				Aluminium green		**704.041.5**	5	4	3	0.040
				Aluminium natural		**704.041.8**	5	4	3	0.040
				Aluminium red		**704.041.2**	5	4	3	0.040
				Aluminium yellow		**704.041.4**	5	4	3	0.040
				Plastic black		**704.042.0**	5	4	3	0.040
				Plastic blue		**704.042.6**	5	4	3	0.040
				Plastic colourless		**704.042.7**	5	4	3	0.040
				Plastic green		**704.042.5**	5	4	3	0.040
				Plastic red		**704.042.2**	5	4	3	0.040
				Plastic yellow		**704.042.4**	5	4	3	0.040
			Aluminium natural with protective cover	Plastic black		**704.043.0**	5	4	3	0.040
				Plastic blue		**704.043.6**	5	4	3	0.040
				Plastic colourless		**704.043.7**	5	4	3	0.040
				Plastic green		**704.043.5**	5	4	3	0.040
				Plastic red		**704.043.2**	5	4	3	0.040
				Plastic yellow		**704.043.4**	5	4	3	0.040

Continuation see next page

Continued from previous page

	Front protection	Switching action	Front ring	Lens	⧄ 30 x 30 Typ-Nr.	Ø 29 mm Typ-Nr.	Mounting dimensions	Technical drawing	Circuit drawing	kg
Pushbutton actuator	IP 65	M	Aluminium natural	Aluminium black		**704.011.0**	5	4	4	0.040
				Aluminium blue		**704.011.6**	5	4	4	0.040
				Aluminium green		**704.011.5**	5	4	4	0.040
				Aluminium natural		**704.011.8**	5	4	4	0.040
				Aluminium red		**704.011.2**	5	4	4	0.040
				Aluminium yellow		**704.011.4**	5	4	4	0.040
				Plastic black		**704.012.0**	5	4	4	0.040
				Plastic blue		**704.012.6**	5	4	4	0.040
				Plastic colourless		**704.012.7**	5	4	4	0.040
				Plastic green		**704.012.5**	5	4	4	0.040
				Plastic red		**704.012.2**	5	4	4	0.040
				Plastic yellow		**704.012.4**	5	4	4	0.040
			Aluminium natural with protective cover	Plastic black		**704.013.0**	5	4	4	0.040
				Plastic blue		**704.013.6**	5	4	4	0.040
				Plastic colourless		**704.013.7**	5	4	4	0.040
				Plastic green		**704.013.5**	5	4	4	0.040
				Plastic red		**704.013.2**	5	4	4	0.040
				Plastic yellow		**704.013.4**	5	4	4	0.040

Switching action: MA = Maintained action, M = Momentary action

Mounting dimensions from page 86, Technical drawing from page 90, Circuit drawing from page 109

Illuminated pushbutton actuator

Essential Accessories:

Single-LED page 56
Switching element page 50

	Front protection	Switching action	Front ring	Lens	⧈ 30 x 30 mm Typ-Nr.	Ø 29 mm Typ-Nr.	Mounting dimensions	Technical drawing	Circuit drawing	kg
Illuminated pushbutton actuator	IP 65	MA	Plastic black	Plastic blue	**704.259.6**	**704.059.6**	5	8	35	0.056
				Plastic colourless	**704.259.7**	**704.059.7**	5	8	35	0.056
				Plastic green	**704.259.5**	**704.059.5**	5	8	35	0.056
				Plastic red	**704.259.2**	**704.059.2**	5	8	35	0.056
				Plastic yellow	**704.259.4**	**704.059.4**	5	8	35	0.056
			Plastic light-grey	Plastic blue	**704.260.6**	**704.060.6**	5	8	35	0.056
				Plastic colourless	**704.260.7**	**704.060.7**	5	8	35	0.056
				Plastic green	**704.260.5**	**704.060.5**	5	8	35	0.056
				Plastic red	**704.260.2**	**704.060.2**	5	8	35	0.056
				Plastic yellow	**704.260.4**	**704.060.4**	5	8	35	0.056
		M	Plastic black	Plastic blue	**704.229.6**	**704.029.6**	5	8	43	0.056
				Plastic colourless	**704.229.7**	**704.029.7**	5	8	43	0.056
				Plastic green	**704.229.5**	**704.029.5**	5	8	43	0.056
				Plastic red	**704.229.2**	**704.029.2**	5	8	43	0.056
				Plastic yellow	**704.229.4**	**704.029.4**	5	8	43	0.056
			Plastic light-grey	Plastic blue	**704.230.6**	**704.030.6**	5	8	43	0.056
				Plastic colourless	**704.230.7**	**704.030.7**	5	8	43	0.056
				Plastic green	**704.230.5**	**704.030.5**	5	8	43	0.056
				Plastic red	**704.230.2**	**704.030.2**	5	8	43	0.056
				Plastic yellow	**704.230.4**	**704.030.4**	5	8	43	0.056
		MA	Aluminium natural	Plastic blue		**704.062.6**	5	8	35	0.056
				Plastic colourless		**704.062.7**	5	8	35	0.056
				Plastic green		**704.062.5**	5	8	35	0.056
				Plastic red		**704.062.2**	5	8	35	0.056
				Plastic yellow		**704.062.4**	5	8	35	0.056
			Aluminium natural with protective cover	Plastic blue		**704.063.6**	5	8	35	0.056
				Plastic colourless		**704.063.7**	5	8	35	0.056
				Plastic green		**704.063.5**	5	8	35	0.056
				Plastic red		**704.063.2**	5	8	35	0.056
				Plastic yellow		**704.063.4**	5	8	35	0.056
		M	Aluminium natural	Plastic blue		**704.032.6**	5	8	43	0.056
				Plastic colourless		**704.032.7**	5	8	43	0.056
				Plastic green		**704.032.5**	5	8	43	0.056
				Plastic red		**704.032.2**	5	8	43	0.056
				Plastic yellow		**704.032.4**	5	8	43	0.056
			Aluminium natural with protective cover	Plastic blue		**704.033.6**	5	8	43	0.056
				Plastic colourless		**704.033.7**	5	8	43	0.056
				Plastic green		**704.033.5**	5	8	43	0.056
				Plastic red		**704.033.2**	5	8	43	0.056
				Plastic yellow		**704.033.4**	5	8	43	0.056

Continuation see next page

Continued from previous page
Switching action: MA = Maintained action, M = Momentary action
Mounting dimensions from page 86, Technical drawing from page 90, Circuit drawing from page 109

Emergency-stop pushbutton actuator, foolproof EN IEC 60947-5-5

Application as per DIN EN ISO 13850 and EN 60204-1

Essential Accessories:

Switching element for Emergency-stop pushbutton page 52

	Front protection	Switching action	Mushroom had cap	Marking	Ø 37 mm Typ-Nr.	Mounting dimensions	Technical drawing	Circuit drawing	kg
Emergency-stop pushbutton actuator, foolproof EN IEC 60947-5-5 Yellow actuator Key to unlock anti-clockwise Standard lock 9500 Max. 2 Slow-make elements can be clipped on	IP 65	MA	Plastic red	Arrows	**704.066.2**	2	24	7	0.300
Yellow actuator Twist to unlock anti-clockwise Max. 2 Slow-make elements can be clipped on	IP 65	MA	Plastic red	Arrows	**704.064.2**	2	14	7	0.300

Switching action: MA = Maintained action
Mounting dimensions from page 86, Technical drawing from page 90, Circuit drawing from page 109

Stop pushbutton actuator

Essential Accessories:

Switching element for Emergency-stop pushbutton page 52

	Front protection	Switching action	Front ring	Mushroom had cap	Marking	Ø 40 mm Typ-Nr.	Mounting dimensions	Technical drawing	Circuit drawing	kg
Stop pushbutton actuator Key to unlock clockwise Standard lock 251	IP 65	MA	Aluminium natural	Plastic red	without	**704.078.0**	9	17	7	0.063
			Plastic light-grey	Plastic red	without	**704.076.0**	9	17	7	0.063
Twist to unlock clockwise	IP 65	MA	Aluminium natural	Plastic red	Arrows	**704.075.2**	9	12	7	0.047
					Stop	**704.075.3**	9	12	7	0.047
			Plastic light-grey	Plastic red	Arrows	**704.074.2**	9	12	7	0.047
					Stop	**704.074.3**	9	12	7	0.047

Switching action: MA = Maintained action

Mounting dimensions from page 86, Technical drawing from page 90, Circuit drawing from page 109

Mushroom-head pushbutton actuator

Essential Accessories:

Switching element page 50

	Front protection	Switching action	Front ring	Mushroom had cap	Ø 40 mm Typ-Nr.	Mounting dimensions	Technical drawing	Circuit drawing	kg
Mushroom-head pushbutton actuator	IP 65	MA	Aluminium natural	Plastic black	**704.073.0**	9	15	3	0.044
				Plastic green	**704.073.5**	9	15	3	0.044
				Plastic red	**704.073.2**	9	15	3	0.044
				Plastic yellow	**704.073.4**	9	15	3	0.044
			Plastic light-grey	Plastic black	**704.072.0**	9	15	3	0.044
				Plastic green	**704.072.5**	9	15	3	0.044
				Plastic red	**704.072.2**	9	15	3	0.044
				Plastic yellow	**704.072.4**	9	15	3	0.044
		M	Aluminium natural	Plastic black	**704.071.0**	9	15	4	0.044
				Plastic green	**704.071.5**	9	15	4	0.044
				Plastic red	**704.071.2**	9	15	4	0.044
				Plastic yellow	**704.071.4**	9	15	4	0.044
			Plastic light-grey	Plastic black	**704.070.0**	9	15	4	0.044
				Plastic green	**704.070.5**	9	15	4	0.044
				Plastic red	**704.070.2**	9	15	4	0.044
				Plastic yellow	**704.070.4**	9	15	4	0.044

Switching action: MA = Maintained action, M = Momentary action

Mounting dimensions from page 86, Technical drawing from page 90, Circuit drawing from page 109

Mushroom-head pushbutton actuator illuminated

Essential Accessories:

Single-LED page 56
Switching element page 50

	Front protection	Switching action	Front ring	Mushroom had cap	Ø 40 mm Typ-Nr.	Mounting dimensions	Technical drawing	Circuit drawing	
Mushroom-head pushbutton actuator illuminated	IP 65	MA	Plastic light-grey	Plastic blue	**704.086.6**	9	13	35	0.044
				Plastic colourless	**704.086.7**	9	13	35	0.044
				Plastic green	**704.086.5**	9	13	35	0.044
				Plastic red	**704.086.2**	9	13	35	0.044
				Plastic yellow	**704.086.4**	9	13	35	0.044
		M	Plastic light-grey	Plastic blue	**704.084.6**	9	13	43	0.044
				Plastic colourless	**704.084.7**	9	13	43	0.044
				Plastic green	**704.084.5**	9	13	43	0.044
				Plastic red	**704.084.2**	9	13	43	0.044
				Plastic yellow	**704.084.4**	9	13	43	0.044

Switching action: MA = Maintained action, M = Momentary action
Mounting dimensions from page 86, Technical drawing from page 90, Circuit drawing from page 109

Keylock switch actuator 2 positions

Essential Accessories:

Switching element page 50

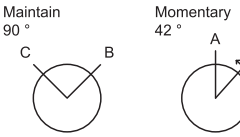

	Front protection	Switching action	Front ring	Key remove	◻ 30 x 30 mm Typ-Nr.	Ø 29 mm Typ-Nr.	Mounting dimensions	Technical drawing	Circuit drawing	kg
Keylock switch actuator 2 positions Position A : Basic position Position B : Momentary action 42° Standard lock 251	IP 65	M	Plastic chromium-plated	A	**704.343.0**		5	9	46	0.070
Position C + B : Maintained action 90° Standard lock 251	IP 65	MA	Plastic chromium-plated	B	**704.340.0**		5	9	47	0.070
				C	**704.341.0**		5	9	47	0.070
				C + B	**704.342.0**		5	9	47	0.070
Position A : Basic position Position B : Momentary action 42° Standard lock 251	IP 65	M	Aluminium chromium-plated	A		**704.123.0**	5	9	46	0.070
Position C + B : Maintained action 90° Standard lock 251	IP 65	MA	Aluminium chromium-plated	B		**704.120.0**	5	9	47	0.070
				C		**704.121.0**	5	9	47	0.070
				C + B		**704.122.0**	5	9	47	0.070

Switching action: M = Momentary action, MA = Maintained action
Mounting dimensions from page 86, Technical drawing from page 90, Circuit drawing from page 109

Keylock switch actuator 3 positions

Essential Accessories:

Switching element page 50

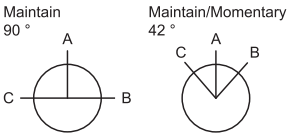

	Front protection	Switching action	Front ring	Key remove	⌑ 30 x 30 mm Typ-Nr.	Ø 29 mm Typ-Nr.	Mounting dimensions	Technical drawing	Circuit drawing	
Keylock switch actuator 3 positions Position C : Maintained action 42° Position A : Basic position Position B : Momentary action 42° Standard lock 251	IP 65	MA-0-M	Plastic chromium-plated	C	**704.337.0**		5	9	48	0.070
				C + A	**704.344.0**		5	9	48	0.070
Position C : Momentary action 42° Position A : Basic position Position B : Maintained action 42° Standard lock 251	IP 65	M-0-MA	Plastic chromium-plated	A	**704.338.0**		5	9	45	0.070
Position C + B : Maintained action 42° Position A : Basic position Standard lock 251	IP 65	MA-0-MA	Plastic chromium-plated	A	**704.334.0**		5	9	49	0.070
				C + B	**704.336.0**		5	9	49	0.070
Position C + B : Maintained action 90° Position A : Basic position Standard lock 251	IP 65	MA-0-MA	Plastic chromium-plated	C + A + B	**704.333.0**		5	9	49	0.070
Position C + B : Momentary action 42° Position A : Basic position Standard lock 251	IP 65	M-0-M	Plastic chromium-plated	A	**704.335.0**		5	9	44	0.070
Position C : Maintained action 42° Position A : Basic position Position B : Momentary action 42° Standard lock 251	IP 65	MA-0-M	Aluminium chromium-plated	C		**704.117.0**	5	9	48	0.070
				C + A		**704.124.0**	5	9	48	0.070
Position C : Momentary action 42° Position A : Basic position Position B : Maintained action 42° Standard lock 251	IP 65	M-0-MA	Aluminium chromium-plated	A		**704.118.0**	5	9	45	0.070
Position C + B : Maintained action 42° Position A : Basic position Standard lock 251	IP 65	MA-0-MA	Aluminium chromium-plated	A		**704.114.0**	5	9	49	0.070
				C + B		**704.116.0**	5	9	49	0.070
Position C + B : Maintained action 90° Position A : Basic position Standard lock 251	IP 65	MA-0-MA	Aluminium chromium-plated	C + A + B		**704.113.0**	5	9	49	0.070
Position C + B : Momentary action 42° Position A : Basic position Standard lock 251	IP 65	M-0-M	Aluminium chromium-plated	A		**704.115.0**	5	9	44	0.070

Switching action: MA = Maintained action, M = Momentary action

Mounting dimensions from page 86, Technical drawing from page 90, Circuit drawing from page 109

Selector switch actuator 2 positions, short lever

Essential Accessories:

Switching element page 50

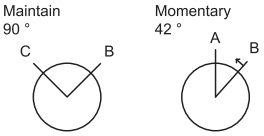

	Front protection	Switching action	Front ring	Lever	⌑ 30 x 30 mm Typ-Nr.	Ø 29 mm Typ-Nr.	Mounting dimensions	Technical drawing	Circuit drawing	kg
Selector switch actuator 2 positions, short lever Position A : Basic position Position B : Momentary action 42°	IP 65	M	Plastic light-grey	Plastic black	**704.512.0**	**704.412.0**	5	11	39	0.034
Position C + B : Maintained action 90°	IP 65	MA	Plastic light-grey	Plastic black	**704.510.0**	**704.410.0**	5	11	40	0.034
Position A : Basic position Position B : Momentary action 42°	IP 65	M	Aluminium natural	Plastic black		**704.413.0**	5	11	39	0.037
Position C + B : Maintained action 90°	IP 65	MA	Aluminium natural	Plastic black		**704.411.0**	5	11	40	0.037

Switching action: M = Momentary action, MA = Maintained action
Mounting dimensions from page 86, Technical drawing from page 90, Circuit drawing from page 109

Selector switch actuator 2 positions, long lever

Essential Accessories:

Switching element page 50

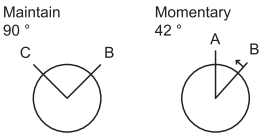

	Front protection	Switching action	Front ring	Lever	⌑ 30 x 30 mm Typ-Nr.	Ø 29 mm Typ-Nr.	Mounting dimensions	Technical drawing	Circuit drawing	kg
Selector switch actuator 2 positions, long lever Position A : Basic position Position B : Momentary action 42°	IP 65	M	Plastic light-grey	Plastic black	**704.302.0**	**704.102.0**	6	10	39	0.034
Position C + B : Maintained action 90°	IP 65	MA	Plastic light-grey	Plastic black	**704.300.0**	**704.100.0**	6	10	40	0.034
Position A : Basic position Position B : Momentary action 42°	IP 65	M	Aluminium natural	Plastic black		**704.103.0**	6	10	39	0.037
Position C + B : Maintained action 90°	IP 65	MA	Aluminium natural	Plastic black		**704.101.0**	6	10	40	0.037

Switching action: M = Momentary action, MA = Maintained action
Mounting dimensions from page 86, Technical drawing from page 90, Circuit drawing from page 109

Selector switch actuator 3 positions, short lever

Essential Accessories:

Switching element page 50

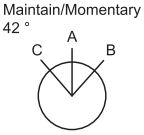

	Front protection	Switching action	Front ring	Lever	◻ 30 x 30 mm Typ-Nr.	Ø 29 mm Typ-Nr.	Mounting dimensions	Technical drawing	Circuit drawing	kg
Selector switch actuator 3 positions, short lever Position C : Maintained action 42° Position A : Basic position Position B : Momentary action 42°	IP 65	MA-0-M	Plastic light-grey	Plastic black	**704.506.0**	**704.406.0**	5	11	41	0.034
Position C : Momentary action 42° Position A : Basic position Position B : Maintained action 42°	IP 65	M-0-MA	Plastic light-grey	Plastic black	**704.508.0**	**704.408.0**	5	11	36	0.034
Position C + B : Maintained action 42° Position A : Basic position	IP 65	MA-0-MA	Plastic light-grey	Plastic black	**704.502.0**	**704.402.0**	5	11	42	0.034
Position C + B : Momentary action 42° Position A : Basic position	IP 65	M-0-M	Plastic light-grey	Plastic black	**704.504.0**	**704.404.0**	5	11	37	0.034
Position C : Maintained action 42° Position A : Basic position Position B : Momentary action 42°	IP 65	MA-0-M	Aluminium natural	Plastic black		**704.407.0**	5	11	41	0.037
Position C : Momentary action 42° Position A : Basic position Position B : Maintained action 42°	IP 65	M-0-MA	Aluminium natural	Plastic black		**704.409.0**	5	11	38	0.037
Position C + B : Maintained action 42° Position A : Basic position	IP 65	MA-0-MA	Aluminium natural	Plastic black		**704.403.0**	5	11	42	0.037
Position C + B : Momentary action 42° Position A : Basic position	IP 65	M-0-M	Aluminium natural	Plastic black		**704.405.0**	5	11	37	0.037

Switching action: MA = Maintained action, M = Momentary action
Mounting dimensions from page 86, Technical drawing from page 90, Circuit drawing from page 109

Selector switch actuator 3 positions, long lever long

Essential Accessories:

Switching element page 50

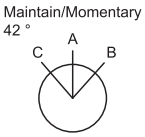

	Front protection	Switching action	Front ring	Lever	◻ 30 x 30 mm Typ-Nr.	Ø 29 mm Typ-Nr.	Mounting dimensions	Technical drawing	Circuit drawing	kg
Selector switch actuator 3 positions, long lever long Position C : Maintained action 42° Position A : Basic position Position B : Momentary action 42°	IP 65	MA-0-M	Plastic light-grey	Plastic black	**704.296.0**	**704.096.0**	6	10	41	0.034
Position C : Momentary action 42° Position A : Basic position Position B : Maintained action 42°	IP 65	M-0-MA	Plastic light-grey	Plastic black	**704.298.0**	**704.098.0**	6	10	38	0.034
Position C + B : Maintained action 42° Position A : Basic position	IP 65	MA-0-MA	Plastic light-grey	Plastic black	**704.292.0**	**704.092.0**	6	10	42	0.034
Position C + B : Momentary action 42° Position A : Basic position	IP 65	M-0-M	Plastic light-grey	Plastic black	**704.294.0**	**704.094.0**	6	10	37	0.034
Position C : Maintained action 42° Position A : Basic position Position B : Momentary action 42°	IP 65	MA-0-M	Aluminium natural	Plastic black		**704.097.0**	6	10	41	0.037
Position C : Momentary action 42° Position A : Basic position Position B : Maintained action 42°	IP 65	M-0-MA	Aluminium natural	Plastic black		**704.099.0**	6	10	38	0.037
Position C + B : Maintained action 42° Position A : Basic position	IP 65	MA-0-MA	Aluminium natural	Plastic black		**704.093.0**	6	10	42	0.037
Position C + B : Momentary action 42° Position A : Basic position	IP 65	M-0-M	Aluminium natural	Plastic black		**704.095.0**	6	10	37	0.037

Switching action: MA = Maintained action, M = Momentary action

Mounting dimensions from page 86, Technical drawing from page 90, Circuit drawing from page 109

Rotary selector switch actuator, short lever

Essential Accessories:

- Rotary selector switching element 30° page 53
- Rotary selector switching element 45° page 53
- Rotary selector switching element 60° page 54

	Front protection	Front ring	Lever	◻ 30 x 30 mm Typ-Nr.	Ø 29 mm Typ-Nr.	Mounting dimensions	Technical drawing	kg
Rotary selector switch actuator, short lever Position 0 : nine o'clock	IP 65	Plastic light-grey	Plastic black	**704.510.1KN**		4	64	0.045
		Aluminium natural	Plastic black		**704.411.1KN**	4	64	0.045

Mounting dimensions from page 86, Technical drawing from page 90

Rotary selector switch actuator, long lever

Essential Accessories:

- Rotary selector switching element 30° page 53
- Rotary selector switching element 45° page 53
- Rotary selector switching element 60° page 54

	Front protection	Front ring	Lever	◻ 30 x 30 mm Typ-Nr.	Ø 29 mm Typ-Nr.	Mounting dimensions	Technical drawing	kg
Rotary selector switch actuator, long lever Position 0 : nine o'clock	IP 65	Plastic light-grey	Plastic black	**704.300.1KN**		4	65	0.045
		Aluminium natural	Plastic black		**704.101.1KN**	4	65	0.045
Position 0 : twelve o'clock	IP 65	Aluminium natural	Plastic black		**704.101.0KN**	4	65	0.045

Mounting dimensions from page 86, Technical drawing from page 90

Indicator, flush mounting

Essential Accessories:

Single-LED page 56

	Front protection	Terminals	Front ring	Lens	⧈ 35 x 35 mm Typ-Nr.	Ø 35 mm Typ-Nr.	Mounting dimensions	Technical drawing	Circuit drawing	
Indicator, flush mounting	IP 65	ST	Plastic black	Plastic blue	**704.206.600**		12	20	6	0.061
				Plastic colourless	**704.206.700**		12	20	6	0.061
				Plastic green	**704.206.500**		12	20	6	0.061
				Plastic red	**704.206.200**		12	20	6	0.061
				Plastic yellow	**704.206.400**		12	20	6	0.061
			Plastic silver	Plastic blue	**704.202.608**		12	20	6	0.061
				Plastic colourless	**704.202.708**		12	20	6	0.061
				Plastic green	**704.202.508**		12	20	6	0.061
				Plastic red	**704.202.208**		12	20	6	0.061
				Plastic yellow	**704.202.408**		12	20	6	0.061
			Aluminium natural	Plastic blue		**704.006.618**	7	20	6	0.061
				Plastic colourless		**704.006.718**	7	20	6	0.061
				Plastic green		**704.006.518**	7	20	6	0.061
				Plastic red		**704.006.218**	7	20	6	0.061
				Plastic yellow		**704.006.418**	7	20	6	0.061

Terminals: ST = Screw terminal

Mounting dimensions from page 86, Technical drawing from page 90, Circuit drawing from page 109

Flasher, flush mounting

Essential Accessories:

Flasher element page 49

Single-LED page 56

	Front protection	Front ring	Lens	◻ 35 x 35 mm Typ-Nr.	Ø 35 mm Typ-Nr.	Mounting dimensions	Technical drawing	Circuit drawing	kg
Flasher, flush mounting	IP 65	Plastic black	Plastic blue	**704.206.600**		12	21	6	0.061
			Plastic colourless	**704.206.700**		12	21	6	0.061
			Plastic green	**704.206.500**		12	21	6	0.061
			Plastic red	**704.206.200**		12	21	6	0.061
			Plastic yellow	**704.206.400**		12	21	6	0.061
		Plastic silver	Plastic blue	**704.202.608**		12	21	6	0.061
			Plastic colourless	**704.202.708**		12	21	6	0.061
			Plastic green	**704.202.508**		12	21	6	0.061
			Plastic red	**704.202.208**		12	21	6	0.061
			Plastic yellow	**704.202.408**		12	21	6	0.061
		Aluminium natural	Plastic blue		**704.006.618**	7	21	6	0.061
			Plastic colourless		**704.006.718**	7	21	6	0.061
			Plastic green		**704.006.518**	7	21	6	0.061
			Plastic red		**704.006.218**	7	21	6	0.061
			Plastic yellow		**704.006.418**	7	21	6	0.061

Mounting dimensions from page 86, Technical drawing from page 90, Circuit drawing from page 109

Buzzer, flush mounting

	Front protection	Front cap	Terminals	Ø 35 mm Typ-Nr.	Mounting dimensions	Technical drawing	Circuit drawing	kg
Buzzer, flush mounting Operation voltage : 24 VDC	IP 40	Aluminium black	S1	**14-810.910**	7	63	1	0.016
		Aluminium natural	S1	**14-810.918**	7	63	1	0.016

Further information in the Technical Data and Typical Applications
Terminals: S1 = Soldering terminal (also pluggable 2.8 x 0.5 mm)
Mounting dimensions from page 86, Technical drawing from page 90, Circuit drawing from page 109

Pushbutton actuator, flush mounting

non-illuminative

Essential Accessories:

Switching element page 50

	Front protection	Switching action	Front ring	Lens	⌑ 35 x 35 mm Typ-Nr.	Ø 35 mm Typ-Nr.	Mounting dimensions	Technical drawing	Circuit drawing	kg
Pushbutton actuator, flush mounting	IP 65	MA	Plastic black	Plastic black	**704.239.000**		12	22	3	0.051
				Plastic blue	**704.239.600**		12	22	3	0.051
				Plastic colourless	**704.239.700**		12	22	3	0.051
				Plastic green	**704.239.500**		12	22	3	0.051
				Plastic red	**704.239.200**		12	22	3	0.051
				Plastic yellow	**704.239.400**		12	22	3	0.051
			Plastic silver	Plastic black	**704.240.008**		12	22	4	0.051
				Plastic blue	**704.240.608**		12	22	3	0.051
				Plastic colourless	**704.240.708**		12	22	3	0.051
				Plastic green	**704.240.508**		12	22	3	0.051
				Plastic red	**704.240.208**		12	22	3	0.051
				Plastic yellow	**704.240.408**		12	22	3	0.051
		M	Plastic black	Plastic black	**704.209.000**		12	22	4	0.051
				Plastic blue	**704.209.600**		12	22	4	0.051
				Plastic colourless	**704.209.700**		12	22	4	0.051
				Plastic green	**704.209.500**		12	22	4	0.051
				Plastic red	**704.209.200**		12	22	4	0.051
				Plastic yellow	**704.209.400**		12	22	4	0.051
			Plastic silver	Plastic black	**704.210.008**		12	22	4	0.051
				Plastic blue	**704.210.608**		12	22	4	0.051
				Plastic colourless	**704.210.708**		12	22	4	0.051
				Plastic green	**704.210.508**		12	22	4	0.051
				Plastic red	**704.210.208**		12	22	4	0.051
				Plastic yellow	**704.210.408**		12	22	4	0.051
		MA	Aluminium natural	Aluminium black		**704.041.018**	7	22	3	0.051
				Aluminium blue		**704.041.618**	7	22	3	0.051
				Aluminium green		**704.041.518**	7	22	3	0.051
				Aluminium natural		**704.041.818**	7	22	3	0.051
				Aluminium red		**704.041.218**	7	22	3	0.051
				Aluminium yellow		**704.041.418**	7	22	3	0.051
				Plastic black		**704.042.018**	7	22	3	0.051
				Plastic blue		**704.042.618**	7	22	3	0.051
				Plastic colourless		**704.042.718**	7	22	3	0.051
				Plastic green		**704.042.518**	7	22	3	0.051
				Plastic red		**704.042.218**	7	22	3	0.051
				Plastic yellow		**704.042.418**	7	22	3	0.051

Continuation see next page

Continued from previous page

	Front protection	Switching action	Front ring	Lens	⧈ 35 x 35 mm Typ-Nr.	Ø 35 mm Typ-Nr.	Mounting dimensions	Technical drawing	Circuit drawing	kg
Pushbutton actuator, flush mounting	IP 65	M	Aluminium natural	Aluminium black		**704.011.018**	7	22	4	0.051
				Aluminium blue		**704.011.618**	7	22	4	0.051
				Aluminium green		**704.011.518**	7	22	4	0.051
				Aluminium natural		**704.011.818**	7	22	4	0.051
				Aluminium red		**704.011.218**	7	22	4	0.051
				Aluminium yellow		**704.011.418**	7	22	4	0.051
				Plastic black		**704.012.018**	7	22	4	0.051
				Plastic blue		**704.012.618**	7	22	4	0.051
				Plastic colourless		**704.012.718**	7	22	4	0.051
				Plastic green		**704.012.518**	7	22	4	0.051
				Plastic red		**704.012.218**	7	22	4	0.051
				Plastic yellow		**704.012.418**	7	22	4	0.051

Switching action: MA = Maintained action, M = Momentary action

Mounting dimensions from page 86, Technical drawing from page 90, Circuit drawing from page 109

Illuminated pushbutton actuator, flush mounting

Essential Accessories:

- Single-LED page 56
- Switching element page 50

	Front protection	Switching action	Front ring	Lens	⧈ 35 x 35 mm Typ-Nr.	Ø 35 mm Typ-Nr.	Mounting dimensions	Technical drawing	Circuit drawing	kg
Illuminated pushbutton actuator, flush mounting	IP 65	MA	Plastic black	Plastic blue	**704.259.600**		12	19	3	0.051
				Plastic colourless	**704.259.700**		12	19	3	0.051
				Plastic green	**704.259.500**		12	19	3	0.051
				Plastic red	**704.259.200**		12	19	3	0.051
				Plastic yellow	**704.259.400**		12	19	3	0.051
			Plastic silver	Plastic blue	**704.260.608**		12	19	3	0.051
				Plastic colourless	**704.260.708**		12	19	3	0.051
				Plastic green	**704.260.508**		12	19	3	0.051
				Plastic red	**704.260.208**		12	19	3	0.051
				Plastic yellow	**704.260.408**		12	19	3	0.051
		M	Plastic black	Plastic blue	**704.229.600**		12	19	4	0.051
				Plastic colourless	**704.229.700**		12	19	4	0.051
				Plastic green	**704.229.500**		12	19	4	0.051
				Plastic red	**704.229.200**		12	19	4	0.051
				Plastic yellow	**704.229.400**		12	19	4	0.051
			Plastic silver	Plastic blue	**704.230.608**		12	19	4	0.051
				Plastic colourless	**704.230.708**		12	19	4	0.051
				Plastic green	**704.230.508**		12	19	4	0.051
				Plastic red	**704.230.208**		12	19	4	0.051
				Plastic yellow	**704.230.408**		12	19	4	0.051
		MA	Aluminium natural	Plastic blue		**704.062.618**	7	19	35	0.067
				Plastic colourless		**704.062.718**	7	19	35	0.067
				Plastic green		**704.062.518**	7	19	35	0.067
				Plastic red		**704.062.218**	7	19	35	0.067
				Plastic yellow		**704.062.418**	7	19	35	0.067
		M	Aluminium natural	Plastic blue		**704.032.618**	7	19	43	0.067
				Plastic colourless		**704.032.718**	7	19	43	0.067
				Plastic green		**704.032.518**	7	19	43	0.067
				Plastic red		**704.032.218**	7	19	43	0.067
				Plastic yellow		**704.032.418**	7	19	43	0.067

Switching action: MA = Maintained action, M = Momentary action
Mounting dimensions from page 86, Technical drawing from page 90, Circuit drawing from page 109

Stop pusbutton actuator, flush mounting

Essential Accessories:

Switching element for Emergency-stop pushbutton page 52

	Front protection	Switching action	Front ring	Mushroom had cap	Marking	Ø 40 mm Typ-Nr.	Mounting dimensions	Technical drawing	Circuit drawing	kg
Stop pusbutton actuator, flush mounting Twist to unlock clockwise	IP 65	MA	Aluminium black	Plastic red	Arrows	**704.074.210**	10	26	7	0.048
					Stop	**704.075.310**	10	26	7	0.048
			Aluminium natural	Plastic red	Arrows	**704.075.218**	10	26	7	0.048
					Stop	**704.075.318**	10	26	7	0.048

Switching action: MA = Maintained action
Mounting dimensions from page 86, Technical drawing from page 90, Circuit drawing from page 109

Mushroom-head pushbutton actuator, flush mounting

Essential Accessories:

Switching element page 50

	Front protection	Front ring	Switching action	Mushroom had cap	Ø 40 mm Typ-Nr.	Mounting dimensions	Technical drawing	Circuit drawing	kg
Mushroom-head pushbutton actuator, flush mounting	IP 65	Aluminium black	MA	Plastic red	**704.073.210**	10	27	3	0.041
			M	Plastic red	**704.071.210**	10	27	4	0.041
				Plastic yellow	**704.071.410**	10	27	4	0.041
		Aluminium natural	M	Plastic red	**704.071.218**	10	27	4	0.041
				Plastic yellow	**704.071.418**	10	27	4	0.041

Switching action: MA = Maintained action, M = Momentary action
Mounting dimensions from page 86, Technical drawing from page 90, Circuit drawing from page 109

Keylock switch actuator 2 positions, flush mounting

Essential Accessories:

Switching element page 50

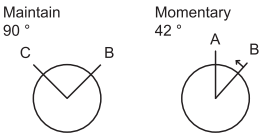

	Front protection	Switching action	Front ring	Key remove	◻ 35 x 35 mm Typ-Nr.	Ø 35 mm Typ-Nr.	Mounting dimensions	Technical drawing	Circuit drawing	kg
Keylock switch actuator 2 positions, flush mounting Position A : Basic position Position B : Momentary action 42° Standard lock 251	IP 65	M	Plastic black	A	**704.343.000**		12	25	46	0.099
			Plastic silver	A	**704.343.008**		12	25	46	0.099
Position C + B : Maintained action 90° Standard lock 251	IP 65	MA	Plastic black	B	**704.340.000**		12	25	47	0.099
				C	**704.341.000**		12	25	47	0.099
				C + B	**704.342.000**		12	25	47	0.099
			Plastic silver	B	**704.340.008**		12	25	47	0.099
				C	**704.341.008**		12	25	47	0.099
				C + B	**704.342.008**		12	25	47	0.099
Position A : Basic position Position B : Momentary action 42° Standard lock 251	IP 65	M	Aluminium natural	A		**704.123.018**	7	25	46	0.099
Position C + B : Maintained action 90° Standard lock 251	IP 65	MA	Aluminium natural	B		**704.120.018**	7	25	47	0.099
				C		**704.121.018**	7	25	47	0.099
				C + B		**704.122.018**	7	25	47	0.099

Switching action: M = Momentary action, MA = Maintained action
Mounting dimensions from page 86, Technical drawing from page 90, Circuit drawing from page 109

Keylock switch actuator 3 positions, flush mounting

Essential Accessories:

Switching element page 50

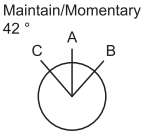

	Front protection	Switching action	Front ring	Key remove	◻ 35 x 35 mm Typ-Nr.	Ø 35 mm Typ-Nr.	Mounting dimensions	Technical drawing	Circuit drawing	kg
Keylock switch actuator 3 positions, flush mounting Position C : Maintained action 42° Position A : Basic position Position B : Momentary action 42° Standard lock 251	IP 65	MA-0-M	Plastic black	C	**704.337.000**		12	25	48	0.099
				C + A	**704.344.000**		12	25	48	0.099
			Plastic silver	C	**704.337.008**		12	25	48	0.099
				C + A	**704.344.008**		12	25	48	0.099
Position C : Momentary action 42° Position A : Basic position Position B : Maintained action 42° Standard lock 251	IP 65	M-0-MA	Plastic black	A	**704.338.000**		12	25	45	0.099
			Plastic silver	A	**704.338.008**		12	25	45	0.099
Position C + B : Maintained action 42° Position A : Basic position Standard lock 251	IP 65	MA-0-MA	Plastic black	A	**704.334.000**		12	25	49	0.099
				C + B	**704.336.000**		12	25	49	0.099
			Plastic silver	A	**704.334.008**		12	25	49	0.099
				C + B	**704.336.008**		12	25	49	0.099
Position C + B : Maintained action 90° Position A : Basic position Standard lock 251	IP 65	MA-0-MA	Plastic black	C + A + B	**704.333.000**		12	25	49	0.099
			Plastic silver	C + A + B	**704.333.008**		12	25	49	0.099
Position C + B : Momentary action 42° Position A : Basic position Standard lock 251	IP 65	M-0-M	Plastic black	A	**704.335.000**		12	25	44	0.099
			Plastic silver	A	**704.335.008**		12	25	44	0.099
Position C : Maintained action 42° Position A : Basic position Position B : Momentary action 42° Standard lock 251	IP 65	MA-0-M	Aluminium natural	C		**704.117.018**	7	25	48	0.099
				C + A		**704.124.018**	7	25	48	0.099
Position C : Momentary action 42° Position A : Basic position Position B: Maintained action 42° Standard lock 251	IP 65	M-0-MA	Aluminium natural	A		**704.118.018**	7	25	45	0.099
Position C + B : Maintained action 42° Position A : Basic position Standard lock 251	IP 65	MA-0-MA	Aluminium natural	A		**704.114.018**	7	25	49	0.099
				C + B		**704.116.018**	7	25	49	0.099
Position C + B : Maintained action 90° Position A : Basic position Standard lock 251	IP 65	MA-0-MA	Aluminium natural	C + A + B		**704.113.018**	7	25	49	0.099
Position C + B : Momentary action 42° Position A : Basic position Standard lock 251	IP 65	M-0-M	Aluminium natural	A		**704.115.018**	7	25	44	0.099

Switching action: MA = Maintained action, M = Momentary action
Mounting dimensions from page 86, Technical drawing from page 90, Circuit drawing from page 109

Selector switch actuator 2 positions, short lever, flush mounting

Essential Accessories:

Switching element page 50

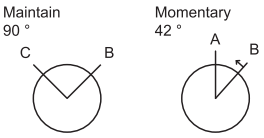

	Front protection	Switching action	Front ring	Lever	◻ 35 x 35 mm Typ-Nr.	Ø 35 mm Typ-Nr.	Mounting dimensions	Technical drawing	Circuit drawing	kg
Selector switch actuator 2 positions, short lever, flush mounting Position A : Basic position Position B : Momentary action 42°	IP 65	M	Plastic black	Plastic black	**704.512.000**		12	23	39	0.056
			Plastic silver	Plastic black	**704.512.008**		12	23	39	0.056
Position C + B : Maintained action 90°	IP 65	MA	Plastic black	Plastic black	**704.510.000**		12	23	40	0.056
			Plastic silver	Plastic black	**704.510.008**		12	23	40	0.056
Position A : Basic position Position B : Momentary action 42°	IP 65	M	Aluminium black	Plastic black		**704.413.010**	7	23	39	0.056
			Aluminium natural	Plastic black		**704.413.018**	7	23	39	0.056
Position C + B : Maintained action 90°	IP 65	MA	Aluminium natural	Plastic black		**704.411.018**	7	23	40	0.056

Switching action: M = Momentary action, MA = Maintained action

Mounting dimensions from page 86, Technical drawing from page 90, Circuit drawing from page 109

Selector switch actuator 2 positions, long lever, flush mounting

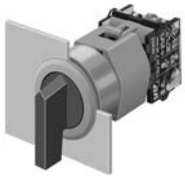

Essential Accessories:

Switching element page 50

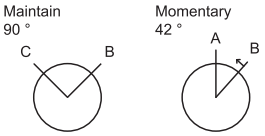

	Front protection	Switching action	Front ring	Lever	◻ 35 x 35 mm Typ-Nr.	Ø 35 mm Typ-Nr.	Mounting dimensions	Technical drawing	Circuit drawing	kg
Selector switch actuator 2 positions, long lever, flush mounting Position A : Basic position Position B : Momentary action 42°	IP 65	M	Plastic black	Plastic black	**704.302.000**		13	16	39	0.056
			Plastic silver	Plastic black	**704.302.008**		13	16	39	0.056
Position C + B : Maintained action 90°	IP 65	MA	Plastic black	Plastic black	**704.300.000**		13	16	40	0.056
			Plastic silver	Plastic black	**704.300.008**		13	16	40	0.056
Position A : Basic position Position B : Momentary action 42°	IP 65	M	Aluminium natural	Plastic black		**704.103.018**	7	16	39	0.056
Position C + B : Maintained action 90°	IP 65	MA	Aluminium black	Plastic black		**704.101.010**	7	16	40	0.056
			Aluminium natural	Plastic black		**704.101.018**	7	16	40	0.056

Switching action: M = Momentary action, MA = Maintained action

Mounting dimensions from page 86, Technical drawing from page 90, Circuit drawing from page 109

Selector switch actuator 3 positions, short lever, flush mounting

Essential Accessories:

Switching element page 50

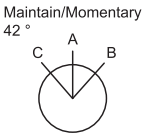

	Front protection	Switching action	Front ring	Lever	⌑ 35 x 35 mm Typ-Nr.	Ø 35 mm Typ-Nr.	Mounting dimensions	Technical drawing	Circuit drawing	kg
Selector switch actuator 3 positions, short lever, flush mounting Position C : Maintained action 42° Position A : Basic position Position B : Momentary action 42°	IP 65	MA-0-M	Plastic black	Plastic black	**704.506.000**		12	23	41	0.056
			Plastic silver	Plastic black	**704.506.008**		12	23	41	0.056
Position C : Momentary action 42° Position A : Basic position Position B : Maintained action 42°	IP 65	M-0-MA	Plastic black	Plastic black	**704.508.000**		12	23	36	0.056
			Plastic silver	Plastic black	**704.508.008**		12	23	36	0.056
Position C + B : Maintained action 42° Position A : Basic position	IP 65	MA-0-MA	Plastic black	Plastic black	**704.502.000**		12	23	42	0.056
			Plastic silver	Plastic black	**704.502.008**		12	23	42	0.056
Position C + B : Momentary action 42° Position A : Basic position	IP 65	M-0-M	Plastic black	Plastic black	**704.504.000**		12	23	37	0.056
			Plastic silver	Plastic black	**704.504.008**		12	23	37	0.056
Position C : Maintained action 42° Position A : Basic position Position B : Momentary action 42°	IP 65	MA-0-M	Aluminium black	Plastic black		**704.407.010**	7	23	41	0.056
			Aluminium natural	Plastic black		**704.407.018**	7	23	41	0.056
Position C : Momentary action 42° Position A : Basic position Position B : Maintained action 42°	IP 65	M-0-MA	Aluminium black	Plastic black		**704.409.010**	7	23	38	0.056
			Aluminium natural	Plastic black		**704.409.018**	7	23	38	0.056
Position C + B : Maintained action 42° Position A : Basic position	IP 65	MA-0-MA	Aluminium black	Plastic black		**704.403.010**	7	23	42	0.056
			Aluminium natural	Plastic black		**704.403.018**	7	23	42	0.056
Position C + B : Momentary action 42° Position A : Basic position	IP 65	M-0-M	Aluminium black	Plastic black		**704.405.010**	7	23	37	0.056
			Aluminium natural	Plastic black		**704.405.018**	7	23	37	0.056

Switching action: MA = Maintained action, M = Momentary action

Mounting dimensions from page 86, Technical drawing from page 90, Circuit drawing from page 109

Selector switch actuator 3 positions, long lever, flush mounting

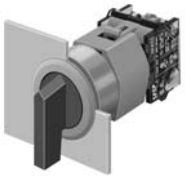

Essential Accessories:

Switching element page 50

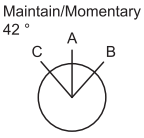

	Front protection	Switching action	Front ring	Lever	⌗ 35 x 35 mm Typ-Nr.	Ø 35 mm Typ-Nr.	Mounting dimensions	Technical drawing	Circuit drawing	kg
Selector switch actuator 3 positions, long lever, flush mounting Position C : Maintained action 42° Position A : Basic position Position B : Momentary action 42°	IP 65	MA-0-M	Plastic black	Plastic black	**704.296.000**		13	23	41	0.056
			Plastic silver	Plastic black	**704.296.008**		13	23	41	0.056
Position C : Momentary action 42° Position A : Basic position Position B : Maintained action 42°	IP 65	M-0-MA	Plastic black	Plastic black	**704.298.000**		13	16	36	0.056
			Plastic silver	Plastic black	**704.298.008**		13	16	36	0.056
Position C + B : Maintained action 42° Position A : Basic position	IP 65	MA-0-MA	Plastic black	Plastic black	**704.292.000**		13	16	42	0.056
			Plastic silver	Plastic black	**704.292.008**		13	16	42	0.056
Position C + B : Momentary action 42° Position A : Basic position	IP 65	M-0-M	Plastic black	Plastic black	**704.294.000**		13	16	37	0.056
			Plastic silver	Plastic black	**704.294.008**		13	16	37	0.056
Position C : Maintained action 42° Position A : Basic position Position B : Momentary action 42°	IP 65	MA-0-M	Aluminium black	Plastic black		**704.097.010**	8	16	41	0.056
			Aluminium natural	Plastic black		**704.097.018**	8	16	41	0.056
Position C : Momentary action 42° Position A : Basic position Position B : Maintained action 42°	IP 65	M-0-MA	Aluminium black	Plastic black		**704.099.010**	8	16	38	0.056
			Aluminium natural	Plastic black		**704.099.018**	8	16	38	0.056
Position C + B : Maintained action 42° Position A : Basic position	IP 65	MA-0-MA	Aluminium black	Plastic black		**704.093.010**	8	16	42	0.056
			Aluminium natural	Plastic black		**704.093.018**	8	16	42	0.056
Position C + B : Momentary action 42° Position A : Basic position	IP 65	M-0-M	Aluminium black	Plastic black		**704.095.010**	8	16	37	0.056
			Aluminium natural	Plastic black		**704.095.018**	8	16	37	0.056

Switching action: MA = Maintained action, M = Momentary action

Mounting dimensions from page 86, Technical drawing from page 90, Circuit drawing from page 109

Rotary selector switch actuator, short lever, flush mounting

Essential Accessories:

- Rotary selector switching element 30° page 53
- Rotary selector switching element 45° page 53
- Rotary selector switching element 60° page 54

	Front protection	Front ring	Lever	⌑ 35 x 35 mm Typ-Nr.	Ø 35 mm Typ-Nr.	Mounting dimensions	Technical drawing	kg
Rotary selector switch actuator, short lever, flush mounting Position 0 : nine o'clock	IP 65	Plastic black	Plastic black	**704.510.100KN**		14	66	0.056
		Plastic silver	Plastic black	**704.510.108KN**		14	66	0.056
		Aluminium black	Plastic black		**704.411.110KN**	1	66	0.056
		Aluminium natural	Plastic black		**704.411.118KN**	1	66	0.056
Position 0 : twelve o'clock	IP 65	Aluminium black	Plastic black		**704.411.010KN**	1	66	0.056

Mounting dimensions from page 86, Technical drawing from page 90

Rotary selector switch actuator, long lever, flush mounting

Essential Accessories:

- Rotary selector switching element 30° page 53
- Rotary selector switching element 45° page 53
- Rotary selector switching element 60° page 54

	Front protection	Front ring	Lever	⌑ 35 x 35 mm Typ-Nr.	Ø 35 mm Typ-Nr.	Mounting dimensions	Technical drawing	kg
Rotary selector switch actuator, long lever, flush mounting Position 0 : nine o'clock	IP 65	Plastic black	Plastic black	**704.300.100KN**		14	67	0.056
		Plastic silver	Plastic black	**704.300.108KN**		14	67	0.056
		Aluminium black	Plastic black		**704.101.110KN**	1	67	0.056
		Aluminium natural	Plastic black		**704.101.118KN**	1	67	0.056
Position 0 : twelve o'clock	IP 65	Aluminium natural	Plastic black		**704.101.018KN**	1	67	0.056

Mounting dimensions from page 86, Technical drawing from page 90

Keylock rotary switch actuator, flush mounting

Essential Accessories:

- Rotary selector switching element 30° page 53
- Rotary selector switching element 45° page 53
- Rotary selector switching element 60° page 54

	Front protection	Front ring	Key remove	Ø 35 mm Typ-Nr.	Mounting dimensions	Technical drawing	kg
Keylock rotary switch actuator, flush mounting Position 0 : nine o'clock (standard) Standard lock 251	IP 65	Aluminium natural	9 o'clock	**704.123.118KN**	7	68	0.120
Position 0 : twelve o'clock (special) Standard lock 251	IP 65	Aluminium natural	12 o'clock	**704.123.018KN**	7	68	0.120

Mounting dimensions from page 86, Technical drawing from page 90

Key insert switch actuator 2 positions, flush mounting

Essential Accessories:

- Switching element page 50

	Front protection	Switching action	Front ring	Ø 38 mm Typ-Nr.	Mounting dimensions	Technical drawing	kg
Key insert switch actuator 2 positions, flush mounting	IP 67	0-MA90°	Stainless-steel	**704.101.0x28**	11	1	0.130
		0-M45°	Stainless-steel	**704.103.0x28**	11	1	0.130

In the Typ-Nr. "x" stands for not defined actuator.
Switching action: MA = Maintained action, M = Momentary action
Mounting dimensions from page 86, Technical drawing from page 90

Key insert switch actuator 3 positions, flush mounting

Essential Accessories:

Switching element page 50

	Front protection	Front ring	Switching action	Ø 38 mm Typ-Nr.	Mounting dimensions	Technical drawing	kg
Key insert switch actuator 3 positions, flush mounting	IP 67	Stainless-steel	MA45°-0-MA45°	**704.093.0x28**	11	1	0.130
			MA45°-0-M45°	**704.097.0x28**	11	1	0.130
			M45°-0-MA45°	**704.099.0x28**	11	1	0.130
			M45°-0-M45°	**704.095.0x28**	11	1	0.130

In the Typ-Nr. "x" stands for not defined actuator.
Switching action: MA = Maintained action, M = Momentary action
Mounting dimensions from page 86, Technical drawing from page 90

Key insert switch actuator 3 positions Conductor Switch, flush mounting

Essential Accessories:

Switching element page 50

	Front protection	Front ring	Switching action	Ø 38 mm Typ-Nr.	Mounting dimensions	Technical drawing	kg
Key insert switch actuator 3 positions Conductor Switch, flush mounting	IP 67	Stainless-steel	M45°-0-M45°	**704.095.0T28**	15	54	0.190

Switching action: M = Momentary action
Mounting dimensions from page 86, Technical drawing from page 90

Lever switch

	Front protection	Front ring	Lever	Switching action	Contacts	Contact material	Ø 40 mm Typ-Nr.	kg
Lever switch Typ S41, Lever-Nr. 11, 1 Contact element	IP 54	Aluminium natural	Plastic black	MA / M	1 NC / 1 NO	Ag	**704.151.XXX**	0.230
Typ S42, Lever-Nr. 11, 1 Contact element	IP 54	Aluminium natural	Plastic black	MA / M	1 NC / 1 NO	Ag	**704.152.XXX**	0.230
Typ S43, Lever-Nr. 11, 1 Contact element	IP 54	Aluminium natural	Plastic black	MA / M	1 NC / 1 NO	Ag	**704.153.XXX**	0.230
Typ S44, Lever-Nr. 11, 1 Contact element positive opened	IP 54	Aluminium natural	Plastic black	MA / M	1 NC / 1 NO	Ag	**704.154.XXX**	0.230
Typ S45, Lever-Nr. 11, 1 Contact element positive opend	IP 54	Aluminium natural	Plastic black	MA / M	1 NC / 1 NO	Ag	**704.155.XXX**	0.230

Connection types
S41: Cage clamp 1.0 ... 1.5 mm²
S42: JST connector max. 0.2 mm² (counter plug is supplied)
S43: Plug-in terminal 6.3 x 0.8 mm
S44:: Cage clamp 1.0 ... 1.5 mm²
S45: Screw terminal or plug-in terminal 6.3 x 0.8 mm.

Micro-switch contacts
The micro-switch is available with a silver contact or a gold plated silver contact.
Contact without positive opening operation:
This is used in the lever switches S41, S42 and S43. Each lever switch includes a maximum of 5 micro-switches.
Contact with positive opening operation:
This is used in the lever switches S44 and S45. Each lever switch includes a maximum of 4 micro-switches.

Levers
There are 8 alternative standard levers (02, 03, 04, 05, 11, 13, 14, 15) available. Special levers are available on request.

Front bezel
Standard front bezel in aluminium natural, can also be delivered in black version.

Note:
Typ-Nr. will be supplied once switching function has been defined including specification of lever style and switching positions.
For further information please contact your local sales office.

A detailed technical documentation is available separately.

Switching action: MA = Maintained action, M = Momentary action
Contacts: NC = Normally closed, NO = Normally open
Contact material: Ag = Silver

Front

Legend frame

adhesive, Aluminium black

	Typ-Nr.	Technical drawing	kg
Legend frame 30 x 50 mm for raised mounting	**704.968.2**	53	0.001
35 x 57.5 mm for flush mounting	**704.968.3**	55	0.001

Technical drawing from page 90

Legend plate insert

for Legend frame 704.968.2 and 704.968.3

	Typ-Nr.	kg
Legend plate insert 14.5 x 23.5 mm, adhesive, Aluminium black	**704.968.1**	0.001
14.5 x 23.5 mm, adhesive, Aluminium natural	**704.968.0**	0.001

Legend plate, square for flush mounting

	Typ-Nr.	kg
Legend plate, square for flush mounting 18 x 35 mm, adhesive, Aluminium black	**704.968.5**	0.001
18 x 35 mm, adhesive, Aluminium natural	**704.968.4**	0.001

Protective cover

Mounting hole size 22.5 mm dia.

	Typ-Nr.	Technical drawing	kg
Protective cover hinged, transparent, with means for sealing, for Pushbutton	**704.925.0**	47	0.007
hinged, transparent, with means for sealing, for Selector switch	**704.925.2**	49	0.007
hinged, transparent, with means for sealing, with spring fitted, for Pushbutton	**704.925.3**	47	0.007

Protective cover only for selector switch in basic position A applicable.
Technical drawing from page 90

Protective cover, flush mounting

Mounting hole size 30.5 mm dia.

	Typ-Nr.	Technical drawing	kg
Protective cover, flush mounting hinged, Aluminium natural, with means for sealing, for Pushbutton and Selector switch short lever	**704.928.38**	51	0.019
hinged, Aluminium natural, with means for sealing, spring fitted, for Pushbutton and Selector switch short lever	**704.928.28**	48	0.019
hinged, Aluminium natural, with window, spring fitted, for Pushbutton	**704.928.18**	50	0.019
hinged, transparent, with means for sealing, for Pushbutton	**704.925.7**	52	0.006

Technical drawing from page 90

Blind plug

	Blind plug	Typ-Nr.	Technical drawing	kg
Blind plug Size 28 mm dia., for mounting hole 22.5 mm dia.	Plastic black	**704.960.4**	44	0.004
Size 30 x 30 mm, for mounting hole 22.5 mm dia.	Plastic black	**704.964.7**	41	0.009
Size 35 x 35 mm, for mounting hole 30 x 30 mm	Plastic black	**704.964.9**	43	0.009
Size 36 mm dia., for mounting hole 30.5 mm dia.	Plastic black	**704.964.8**	42	0.007

Technical drawing from page 90

Spare key

	Typ-Nr.	kg
Spare key Standard lock 251	**704.989.0**	0.006

Other lock numbers on request

Backside

Flasher element

	Terminals	Typ-Nr.	Technical drawing	Circuit drawing	kg
Flasher element Operating voltage : 115 VAC ±10 %, 50/60 Hz Lamp voltage/-current : 60 V, 33 mA	ST	**704.943.1**	31	13	0.024
Operating voltage : 130 VDC ±10 % Lamp voltage/-current : 130 V, 3 mA	ST	**704.943.2**	31	13	0.024
Operating voltage : 230 VAC -10 % ... +6 %, 50/60 Hz Lamp voltage/-current : 130 V, 20 mA	ST	**704.943.0**	31	13	0.024
Operating voltage : 24 VDC ±15 % Lamp voltage/-current : 24 V, 10 mA ... 85 mA	ST	**704.943.5**	31	13	0.024

Further information in the Technical Data and Typical Applications
Terminals: ST = Screw terminal
Technical drawing from page 90, Circuit drawing from page 109

Switching element

	Switching system	Contacts	Contact material	Terminals	Typ-Nr.	Technical drawing	Circuit drawing	kg
Switching element	SM	1 NC	Au/Ag	ST	**704.911.2**	28	8	0.021
			Ag	D-PT 6.3	**704.915.2/D**	30	8	0.025
				PT 6.3	**704.915.2**	29	8	0.021
				ST	**704.910.2**	28	8	0.021
			Ag/Pd	ST	**704.912.2**	28	8	0.021
		1 NC + 1 NO	Au/Ag	ST	**704.911.5**	28	50	0.028
			Ag	D-PT 6.3	**704.915.5/D**	30	50	0.032
				PT 6.3	**704.915.5**	29	50	0.028
				ST	**704.910.5**	28	50	0.028
			Ag/Pd	ST	**704.912.5**	28	50	0.028
		1 NO	Au/Ag	ST	**704.911.1**	28	9	0.021
			Ag	D-PT 6.3	**704.915.1/D**	30	9	0.025
				PT 6.3	**704.915.1**	29	9	0.021
				ST	**704.910.1**	28	9	0.021
			Ag/Pd	ST	**704.912.1**	28	9	0.021
		2 NC	Au/Ag	ST	**704.911.4**	28	52	0.028
			Ag	D-PT 6.3	**704.915.4/D**	30	52	0.032
				PT 6.3	**704.915.4**	29	52	0.028
				ST	**704.910.4**	28	52	0.028
			Ag/Pd	ST	**704.912.4**	28	52	0.028
		2 NO	Au/Ag	ST	**704.911.3**	28	51	0.028
			Ag	D-PT 6.3	**704.915.3/D**	30	51	0.032
				PT 6.3	**704.915.3**	29	51	0.028
				ST	**704.910.3**	28	51	0.028
			Ag/Pd	ST	**704.912.3**	28	51	0.028
	SA	1 NC	Au/Ag	D-PT 6.3	**704.901.2/D**	30	8	0.026
				ST	**704.901.2**	28	8	0.021
			Ag	D-PT 6.3	**704.905.2/D**	30	8	0.026
				PT 6.3	**704.905.2**	29	8	0.021
				ST	**704.900.2**	28	8	0.021
			Ag/Pd	ST	**704.902.2**	28	8	0.021
		1 NC + 1 NO	Au/Ag	D-PT 6.3	**704.901.5/D**	30	50	0.033
				ST	**704.901.5**	28	50	0.028
			Ag	D-PT 6.3	**704.905.5/D**	30	50	0.033
				PT 6.3	**704.905.5**	29	50	0.028
				ST	**704.900.5**	28	50	0.028
			Ag/Pd	ST	**704.902.5**	28	50	0.028
		1 NO	Au/Ag	D-PT 6.3	**704.901.1/D**	30	9	0.026
				ST	**704.901.1**	28	9	0.021
			Ag	D-PT 6.3	**704.905.1/D**	30	9	0.026
				PT 6.3	**704.905.1**	29	9	0.021
				ST	**704.900.1**	28	9	0.021
			Ag/Pd	ST	**704.902.1**	28	9	0.021
		2 NC	Au/Ag	D-PT 6.3	**704.901.4/D**	30	52	0.033
				ST	**704.901.4**	28	52	0.028
			Ag	D-PT 6.3	**704.905.4/D**	30	52	0.033
				PT 6.3	**704.905.4**	29	52	0.028
				ST	**704.900.4**	28	52	0.028
			Ag/Pd	ST	**704.902.4**	28	52	0.028

Continuation see next page

Continued from previous page

	Switching system	Contacts	Contact material	Terminals	Typ-Nr.	Technical drawing	Circuit drawing	kg
Switching element	SA	2 NO	Au/Ag	D-PT 6.3	**704.901.3/D**	30	51	0.033
				ST	**704.901.3**	28	51	0.028
			Ag	D-PT 6.3	**704.905.3/D**	30	51	0.033
				PT 6.3	**704.905.3**	29	51	0.028
				ST	**704.900.3**	28	51	0.028
			Ag/Pd	ST	**704.902.3**	28	51	0.028

For the 3rd switching element per switch the terminal marking insert is to be ordered separately.
Switching system: SM = Slow-make switching element, SA = Snap-action switching element
Contacts: NC = Normally closed, NO = Normally open
Contact material: Au/Ag = Gold/Silver, Ag = Silver, Ag/Pd = Silver/Palladium
Terminals: ST = Screw terminal, D-PT 6.3 = Double plug-in terminal 6.3 mm, PT 6.3 = Plug-in terminal 6.3 mm
Technical drawing from page 90, Circuit drawing from page 109

Switching element for ring cable shoe

	Switching system	Contacts	Contact material	Terminals	Typ-Nr.	Technical drawing	Circuit drawing	kg
Switching element for ring cable shoe	SM	1 NC	Au/Ag	ST	**704.911.2B**	28	8	0.021
			Ag	ST	**704.910.2B**	28	8	0.021
		1 NC + 1 NO	Au/Ag	ST	**704.911.5B**	28	50	0.028
			Ag	ST	**704.910.5B**	28	50	0.028
		1 NO	Au/Ag	ST	**704.911.1B**	28	9	0.021
			Ag	ST	**704.910.1B**	28	9	0.021
		2 NC	Au/Ag	ST	**704.911.4B**	28	52	0.028
			Ag	ST	**704.910.4B**	28	52	0.028
		2 NO	Au/Ag	ST	**704.911.3B**	28	51	0.028
			Ag	ST	**704.910.3B**	28	51	0.028
	SA	1 NC	Ag	ST	**704.900.2B**	28	8	0.021
		1 NC + 1 NO	Ag	ST	**704.900.5B**	28	50	0.028
		1 NO	Ag	ST	**704.900.1B**	28	9	0.021
		2 NC	Ag	ST	**704.900.4B**	28	52	0.028
		2 NO	Ag	ST	**704.900.3B**	28	51	0.028

Switching system: SM = Slow-make switching element, SA = Snap-action switching element
Contacts: NC = Normally closed, NO = Normally open
Contact material: Au/Ag = Gold/Silver, Ag = Silver
Terminals: ST = Screw terminal
Technical drawing from page 90, Circuit drawing from page 109

Switching element for Emergency-stop pushbutton

	Switching system	Contacts	Contact material	Terminals	Typ-Nr.	Technical drawing	Circuit drawing	kg
Switching element for Emergency-stop pushbutton	SM	1 NC	Au/Ag	ST	**704.911.2**	28	8	0.021
			Ag	D-PT 6.3	**704.915.2/D**	30	8	0.025
				PT 6.3	**704.915.2**	29	8	0.021
				ST	**704.910.2**	28	8	0.021
			Ag/Pd	ST	**704.912.2**	28	8	0.021
		1 NC + 1 NO	Au/Ag	ST	**704.911.5**	28	50	0.028
			Ag	D-PT 6.3	**704.915.5/D**	30	50	0.032
				PT 6.3	**704.915.5**	29	50	0.028
				ST	**704.910.5**	28	50	0.028
			Ag/Pd	ST	**704.912.5**	28	50	0.028
		1 NO	Au/Ag	ST	**704.911.1**	28	9	0.021
			Ag	D-PT 6.3	**704.915.1/D**	30	9	0.025
				PT 6.3	**704.915.1**	29	9	0.021
				ST	**704.910.1**	28	9	0.021
			Ag/Pd	ST	**704.912.1**	28	9	0.021
		2 NC	Au/Ag	ST	**704.911.4**	28	52	0.028
			Ag	D-PT 6.3	**704.915.4/D**	30	52	0.032
				PT 6.3	**704.915.4**	29	52	0.028
				ST	**704.910.4**	28	52	0.028
			Ag/Pd	ST	**704.912.4**	28	52	0.028
		2 NO	Au/Ag	ST	**704.911.3**	28	51	0.028
			Ag	D-PT 6.3	**704.915.3/D**	30	51	0.032
				PT 6.3	**704.915.3**	29	51	0.028
				ST	**704.910.3**	28	51	0.028
			Ag/Pd	ST	**704.912.3**	28	51	0.028

Switching system: SM = Slow-make switching element
Contacts: NC = Normally closed, NO = Normally open
Contact material: Au/Ag = Gold/Silver, Ag = Silver, Ag/Pd = Silver/Palladium
Terminals: ST = Screw terminal, D-PT 6.3 = Double plug-in terminal 6.3 mm, PT 6.3 = Plug-in terminal 6.3 mm
Technical drawing from page 90, Circuit drawing from page 109

Rotary selector switching element 30°

	Contacts	Stages	Terminals	Typ-Nr.	Circuit drawing	kg
Rotary selector switching element 30° Position a : Start position Position i : End position	9 (1-pole)	5	ST	**704.8A236**	14	0.073
Position a : Start position Position k : End position	10 (1-pole)	5	ST	**704.8A237**	15	0.073
Position a : Start position Position l : End position	11 (1-pole)	6	ST	**704.8A238**	16	0.082
Position a : Start position Position m : End position	12 (1-pole)	6	ST	**704.8A239**	17	0.082
Position a : Start position without stop	12 (1-pole)	6	ST	**704.8A639**	17	0.082

Rotary switching elements are not on stock and have to be ordered as a customised product locally
Terminals: ST = Screw terminal
Circuit drawing from page 109

Rotary selector switching element 45°

	Contacts	Stages	Terminals	Typ-Nr.	Circuit drawing	kg
Rotary selector switching element 45° Position a : Start position Position g : End position	7 (1-pole)	4	ST	**704.8A234**	18	0.064
	7 (2-poles)	7	ST	**704.8A254**	19	0.091
Position a : Start position Position h : End position	8 (1-pole)	4	ST	**704.8A235**	20	0.064
	8 (2-poles)	8	ST	**704.8A255**	21	0.100

Rotary switching elements are not on stock and have to be ordered as a customised product locally
Terminals: ST = Screw terminal
Circuit drawing from page 109

Rotary selector switching element 60°

	Contacts	Stages	Terminals	Typ-Nr.	Circuit drawing	kg
Rotary selector switching element 60° Position a : Start position Position c : End position	3 (1-pole)	2	ST	**704.8A230**	22	0.046
	3 (1-pole, DC-isolated)	2	ST	**704.8A730**	33	0.046
	3 (2-poles)	3	ST	**704.8A250**	23	0.055
	3 (3-poles)	5	ST	**704.8A270**	24	0.073
Position a : Start position Position d : End position	4 (1-pole)	2	ST	**704.8A231**	25	0.046
	4 (1-pole, DC isolated)	2	ST	**704.8A731**	34	0.046
	4 (2-poles)	4	ST	**704.8A251**	26	0.064
	4 (3-poles)	6	ST	**704.8A271**	27	0.082
Position a : Start position Position e : End position	5 (1-pole)	3	ST	**704.8A232**	28	0.055
	5 (2-poles)	5	ST	**704.8A252**	29	0.073
	5 (3-poles)	8	ST	**704.8A272**	30	0.100
Position a : Start position Position f : End position	6 (1-pole)	3	ST	**704.8A233**	31	0.055
	6 (2-poles)	6	ST	**704.8A253**	32	0.082

Rotary switching elements are not on stock and have to be ordered as a customised product locally
Terminals: ST = Screw terminal
Circuit drawing from page 109

Terminal cover

	Typ-Nr.	Technical drawing	kg
Terminal cover for covering of screw terminal	**704.964.5**	34	0.003

Technical drawing from page 90

Terminal marking

	Marking	Typ-Nr.	kg
Terminal marking 1 NC + 1 NO (for 1st or 2nd switching element)	13/21 33/41	**704.965.9**	0.001
	22/14 42/34	**704.966.0**	0.001
1 NC + 1 NO (for 3rd switching element)	53/61 73/81	**704.966.1**	0.001
	62/54 82/74	**704.966.2**	0.001
2 NC (for 1st or 2nd switching element)	11/21 31/41	**704.965.5**	0.001
	22/12 42/32	**704.965.6**	0.001
2 NC (for 3rd switching element)	51/61 71/81	**704.965.7**	0.001
	62/52 82/72	**704.965.8**	0.001
2 NO (for 1st or 2nd switching element)	13/23 33/43	**704.965.1**	0.001
	24/14 44/34	**704.965.2**	0.001
2 NO (for 3rd switching element)	53/63 73/83	**704.965.3**	0.001
	64/54 84/74	**704.965.4**	0.001

Illumination

Filament lamp

The max. overall length of the lamp may not exeed 25 mm

	Socket	Operating voltage/-current	Typ-Nr.	kg
Filament lamp	BA9s	110 VAC/DC, 22 mA	**10-1422.1179**	0.002
		12 VAC/DC, 100 mA	**10-1409.1329**	0.002
		130 VAC/DC, 20 mA	**10-1424.1179**	0.002
		24 VAC/DC, 50 mA	**10-1412.1279**	0.002
		36 VAC/DC, 56 mA	**10-1416.1289**	0.002
		48 VAC/DC, 42 mA	**10-1419.1249**	0.002
		6 VAC/DC, 200 mA	**10-1406.1369**	0.002
		60 VAC/DC, 33 mA	**10-1420.1219**	0.002

Single-LED

The max. overall length of the lamp may not exeed 25 mm

	Socket	Light colour	Operating voltage/-current	Typ-Nr.	kg
Single-LED	BA9s	blue	12 VAC/DC, 16 mA	**10-2509.1146**	0.002
			130 VAC, 5 mA	**10-2H24.2056**	0.002
			230 VAC, 3 mA	**10-2H25.2046**	0.002
			24 VAC/DC, 15 mA	**10-2512.1146**	0.002
			28 VAC/DC, 13 mA	**10-2513.1146**	0.002
			48 VAC/DC, 4/8 mA	**10-2519.1056**	0.002
			6 VDC, 17 mA	**10-2506.1086**	0.002
		green	12 VAC/DC, 16 mA	**10-2509.1145**	0.002
			130 VAC, 5 mA	**10-2H24.2055**	0.002
			230 VAC, 3 mA	**10-2H25.2045**	0.002
			24 VAC/DC, 15 mA	**10-2512.1145**	0.002
			28 VAC/DC, 13 mA	**10-2513.1145**	0.002
			48 VAC/DC, 4/8 mA	**10-2519.1055**	0.002
			6 VDC, 17 mA	**10-2506.1085**	0.002
		red	12 VAC/DC, 16 mA	**10-2509.1142**	0.002
			130 VAC, 5 mA	**10-2H24.2052**	0.002
			230 VAC, 3 mA	**10-2H25.2042**	0.002
			24 VAC/DC, 15 mA	**10-2512.1142**	0.002
			28 VAC/DC, 13 mA	**10-2513.1142**	0.002
			48 VAC/DC, 4/8 mA	**10-2519.1052**	0.002
			6 VDC, 17 mA	**10-2506.1082**	0.002
		white diffuse	12 VAC/DC, 16 mA	**10-2509.1149**	0.002
			130 VAC, 5 mA	**10-2H24.2059**	0.002
			230 VAC, 3 mA	**10-2H25.2049**	0.002
			24 VAC/DC, 15 mA	**10-2512.1149**	0.002
			28 VAC/DC, 13 mA	**10-2513.1149**	0.002
			48 VAC/DC, 4/8 mA	**10-2519.1059**	0.002
			6 VDC, 17 mA	**10-2506.1089**	0.002
		yellow	12 VAC/DC, 16 mA	**10-2509.1144**	0.002
			130 VAC, 5 mA	**10-2H24.2054**	0.002
			230 VAC, 3 mA	**10-2H25.2044**	0.002
			24 VAC/DC, 15 mA	**10-2512.1144**	0.002
			28 VAC/DC, 13 mA	**10-2513.1144**	0.002
			48 VAC/DC, 4/8 mA	**10-2519.1054**	0.002
			6 VDC, 17 mA	**10-2506.1084**	0.002

Note:
AC operation through halve-wave rectifier possible, slight flickering can occure.
12, 24, 28, 48 VAC/DC versions with bridge rectifier. Used on a DC voltage and AC voltage with the same light output.

Diode block

	Terminals	Typ-Nr.	Technical drawing	Circuit drawing	kg
Diode block 2 Diodes 1N4007	ST	**704.942.5**	33	2	0.019

Terminals: ST = Screw terminal
Technical drawing from page 90, Circuit drawing from page 109

Lamp transformer

Lamp voltage/-current : 24 VAC, 50 mA, 50/60 Hz

	Terminals	Typ-Nr.	Technical drawing	Circuit drawing	kg
Lamp transformer Operating voltage : 115 VAC / 24 VAC	ST	**704.970.3**	32	10	0.100
Operating voltage : 230 VAC / 24 VAC	ST	**704.970.4**	32	10	0.100
Operating voltage : 400 VAC / 24 VAC	ST	**704.970.5**	32	10	0.100
Operating voltage : 440 VAC / 24 VAC	ST	**704.970.6**	32	10	0.100

Terminals: ST = Screw terminal
Technical drawing from page 90, Circuit drawing from page 109

Capacitor block

Lamp voltage/-current : 130 VAC, 20 mA, 50 Hz

	Terminals	Typ-Nr.	Technical drawing	Circuit drawing	kg
Capacitor block Operating voltage : 230 VAC / 130 VAC	ST	**704.942.0**	33	5	0.018

Terminals: ST = Screw terminal
Technical drawing from page 90, Circuit drawing from page 109

Resistor block

Lamp voltage/-current : 130 V, 20mA und 60 V, 33 mA

	Terminals	Typ-Nr.	Technical drawing	Circuit drawing	kg
Resistor block Operating voltage : 125 VAC / 60 VAC	ST	**704.941.5**	33	11	0.006
Operating voltage : 230 VAC / 130 VAC	ST	**704.941.0**	33	11	0.017

Terminals: ST = Screw terminal
Technical drawing from page 90, Circuit drawing from page 109

Resistor-diode block

Lamp voltage/-current : 130 V, 20mA

	Terminals	Typ-Nr.	Technical drawing	Circuit drawing	kg
Resistor-diode block Operating voltage : 230 VAC / 130 VAC	ST	**704.941.9**	33	12	0.017

Terminals: ST = Screw terminal
Technical drawing from page 90, Circuit drawing from page 109

Terminal plate empty

for fitting with series resistors

	Typ-Nr.	kg
Terminal plate empty 10 spaces 125 x 60 x 15 mm	**02-912.2**	0.045
15 spaces 187.5 x 60 x 15 mm	**02-912.3**	0.090
20 spaces 250 x 60 x 15 mm	**02-912.4**	0.095
5 spaces 62.5 x 60 x 15 mm	**02-912.1**	0.025

Emergency-stop pushbutton

Emergency-stop label

front panel thickness 3 mm max.

	Marking	Typ-Nr.	kg
Emergency-stop label 60 mm dia., yellow, Mounting hole size 22.5 mm dia.	ARRET D'URGENCE	**704.963.7**	0.011
	EMERGENCY STOP	**704.963.6**	0.011
	NOT AUS	**704.963.5**	0.011
	NOT HALT	**704.963.8**	0.011
90 mm dia., yellow, Mounting hole size 22.5 mm dia.	ARRET D'URGENCE	**704.963.2**	0.011
	EMERGENCY STOP	**704.963.1**	0.011
	NOT AUS	**704.963.0**	0.011
	NOT HALT	**704.963.3**	0.011

Emergency-stop protective shroud

use only for Typ-Nr. 704.064.2 und 704.066.2

	Typ-Nr.	kg
Emergency-stop protective shroud Aluminium natural	**704.927.0**	0.067
Aluminium yellow varnished	**704.927.4**	0.067

The protection ring is not suitable for a proper use of Emergency-stop pushbutton. It can obstruct a spontaneous operation of the Emergency-stop pushbutton.

Emergency-stop enclosures

Bottom grey similar RAL 7035; cover lead-sealable, yellow similar RAL 1004

	Dimension	Typ-Nr.	Technical drawing	kg
Emergency-stop enclosures with mounting hole size 22.5 mm dia., with anti-twist device	L 65 mm, W 65 mm, H 81 mm	**704.945.7**	56	0.127
	L 94 mm, W 65 mm, H 81 mm	**704.945.8**	57	0.157
	L 94 mm, W 94 mm, H 81 mm	**704.945.0**	58	0.195

Openings for cable gland M16 or M20
Protection class IP 66
Technical drawing from page 90

Cable gland

	Typ-Nr.	kg
Cable gland M16, Plastic grey	**61-9481.6**	0.007
M20, Plastic grey	**704.945.6**	0.011

with traction relief; protection degree IP 68

Assembling

Anti-twist ring, flush mounting

	Typ-Nr.	kg
Anti-twist ring, flush mounting	**704.954.0**	0.002

Reducing ring

Devices 22.5 mm dia. in mounting hole size 30.5 mm dia.

	Typ-Nr.	kg
Reducing ring Aluminium black	**704.960.0**	0.004
Aluminium natural	**704.960.8**	0.004

With the metal bayonet flange you can use one reduction ring. If you have a plastic bayonet flange you need to install two reduction rings.

Mounting plate

for separate mounting of lamp transformer, resistor block or capacitor block

	Typ-Nr.	Technical drawing	kg
Mounting plate	**704.940.8**	35	0.006

Technical drawing from page 90

Snap-on base

to snap-on, for seperate mounting of lamp transformer, resistor block or capacitor block

	Typ-Nr.	Technical drawing	kg
Snap-on base DIN mounting bar EN 50022	**704.941.1**	37	0.006
DIN mounting bar EN 50035	**704.940.9**	36	0.006

Technical drawing from page 90

Reinforcement plate

for thin front panel and plastic case

	Typ-Nr.	kg
Reinforcement plate 44 x 29 x 2 mm, mounting hole 22,5 mm dia., sheet steel galvanized yellow passivated	**704.960.9**	0.014

Lens plug for round lens, flush mounting

with lamp remover function (BA9s)

	Typ-Nr.	kg
Lens plug for round lens, flush mounting for mounting and dismantling of Lens round, flush mounting	**700.006.0**	0.003

Lens remover for square lens, flush mounting

	Typ-Nr.	kg
Lens remover for square lens, flush mounting	**98-968**	0.004

Lamp remover

	Typ-Nr.	kg
Lamp remover for mounting and dismantling of LED and Filament lamp	**700.004.0**	0.003

CAUTION
A switching process might be released when replacing the lamp !

Mounting tool for Indicator

for Indicators full-face illumination, compact

	Typ-Nr.	kg
Mounting tool for Indicator for tightening (or loosening) of the Fixing nut	**700.005.0**	0.020

Mounting tool for Key insert switch

	Typ-Nr.	kg
Mounting tool for Key insert switch for tightening (or loosening) of the Fixing nut	**704.990.0**	0.020

Enclosure

Grey similar RAL 7035; cover lead-sealable

	Dimension	Typ-Nr.	Technical drawing	kg
Enclosure with mounting hole 1 x 22.5 mm dia., with anti-twist device	L 94 mm, W 94 mm, H 81 mm	**704.945.1**	58	0.211
with mounting hole 2 x 22.5 mm dia., with anti-twist device	L 130 mm, W 94 mm, H 81 mm	**704.945.2**	59	0.251
with mounting hole 3 x 22.5 mm dia., with anti-twist device	L 180 mm, W 94 mm, H 81 mm	**704.945.3**	60	0.313
with mounting hole 4 x 22.5 mm dia., with anti-twist device	L 180 mm, W 182 mm, H 110 mm	**704.945.4**	61	0.572
with mounting hole 6 x 22.5 mm dia., with anti-twist device	L 180 mm, W 182 mm, H 110 mm	**704.945.5**	62	0.568

Openings for cable gland M16 or M20
Protection class IP 66
Technical drawing from page 90

Cable gland

	Typ-Nr.	kg
Cable gland M16, Plastic grey	**61-9481.6**	0.007
M20, Plastic grey	**704.945.6**	0.011

with traction relief; protection degree IP 68

Indicator compact

Indicator actuator for Indicator compact

	Housing	Ø 29 mm Typ-Nr.	Circuit drawing	kg
Indicator actuator for Indicator compact with series resistor for 110/125 V and incandescent lamp 60 V, 33 mA	Plastic grey	**704.642.1**	6	0.020
with series resistor for 220/240 V and incandescent lamp 130 V, 20 mA	Plastic grey	**704.642.2**	6	0.009
without built-in series resistor	Plastic grey	**704.642.0**	6	0.006

Circuit drawing from page 109

Lens cap round, plastic

	Lens cap	Ø 29 mm Typ-Nr.	kg
Lens cap round, plastic	Plastic blue transparent flush	**704.603.6**	0.003
	Plastic colourless transparent flush	**704.603.7**	0.003
	Plastic green transparent flush	**704.603.5**	0.003
	Plastic red transparent flush	**704.603.2**	0.003
	Plastic yellow transparent flush	**704.603.4**	0.003

Marking cap for Lens cap round

	Marking cap	Typ-Nr.	kg
Marking cap for Lens cap round LED	Plastic colourless transparent ribbed	**704.608.7**	0.002
LED and Filament lamp	Plastic white translucent	**704.608.9**	0.002

Indicator and Flasher round, full face illumination

Indicator actuator round, full face illumination

	Housing	Ø 29 mm Typ-Nr.	kg
Indicator actuator round, full face illumination	Plastic grey	**704.630.1**	0.020

Lens cap round, plastic

	Lens cap	Ø 29 mm Typ-Nr.	kg
Lens cap round, plastic	Plastic blue transparent flush	**704.603.6**	0.003
	Plastic colourless transparent flush	**704.603.7**	0.003
	Plastic green transparent flush	**704.603.5**	0.003
	Plastic red transparent flush	**704.603.2**	0.003
	Plastic yellow transparent flush	**704.603.4**	0.003

Marking cap for Lens cap round

	Marking cap	Typ-Nr.	kg
Marking cap for Lens cap round LED	Plastic colourless transparent ribbed	**704.608.7**	0.002
LED and Filament lamp	Plastic white translucent	**704.608.9**	0.002

Bayonet flange

	Typ-Nr.	Technical drawing	kg
Bayonet flange Metal	**704.960.5**	46	0.025
Plastic	**704.950.5**	45	0.015

Technical drawing from page 90

Lamp block

	Terminals	Typ-Nr.	Technical drawing	Circuit drawing	kg
Lamp block Standard	PT 6.3	**704.950.1**	39	6	0.012
	ST	**704.950.0**	38	6	0.012
Terminals Cu/Sn nickel plated	D-PT 6.3	**704.950.2/D**	40	6	0.013
Terminals Cu/Sn nickel plated and blank	D-PT 6.3	**704.950.1/D**	40	6	0.013
Terminals for ring cable shoe	ST	**704.950.0B**	38	6	0.013

Terminals: PT 6.3 = Plug-in terminal 6.3 mm, ST = Screw terminal, D-PT 6.3 = Double plug-in terminal 6.3 mm
Technical drawing from page 90, Circuit drawing from page 109

Indicator and Flasher square, full face illumination

Indicator actuator square, full face illumination

	Housing	⌀ 30 x 30 mm Typ-Nr.	kg
Indicator actuator square, full face illumination	Plastic black	**704.730.0**	0.005
	Plastic grey	**704.730.1**	0.005

Lens cap square, plastic

	Lens cap	⌀ 30 x 30 mm Typ-Nr.	kg
Lens cap square, plastic	Plastic blue transparent flush	**704.703.6**	0.003
	Plastic colourless transparent flush	**704.703.7**	0.003
	Plastic green transparent flush	**704.703.5**	0.003
	Plastic red transparent flush	**704.703.2**	0.003
	Plastic yellow transparent flush	**704.703.4**	0.003

Diffusor cap for Lens cap square

	Diffusor cap	⌀ 30 x 30 mm Typ-Nr.	kg
Diffusor cap for Lens cap square can be marked	Plastic white	**704.708.9**	0.004
LED	Plastic colourless	**704.708.7**	0.004

Marking foil for Lens square

	Marking foil	Typ-Nr.	kg
Marking foil for Lens square can be hot stamped	Plastic colourless transparent	**704.706.7**	0.001

Bayonet flange

	Typ-Nr.	Technical drawing	kg
Bayonet flange Metal	**704.960.5**	46	0.025
Plastic	**704.950.5**	45	0.015

Technical drawing from page 90

Lamp block

	Terminals	Typ-Nr.	Technical drawing	Circuit drawing	kg
Lamp block Standard	PT 6.3	**704.950.1**	39	6	0.012
	ST	**704.950.0**	38	6	0.012
Terminals Cu/Sn nickel plated	D-PT 6.3	**704.950.2/D**	40	6	0.013
Terminals Cu/Sn nickel plated and blank	D-PT 6.3	**704.950.1/D**	40	6	0.013
Terminals for ring cable shoe	ST	**704.950.0B**	38	6	0.013

Terminals: PT 6.3 = Plug-in terminal 6.3 mm, ST = Screw terminal, D-PT 6.3 = Double plug-in terminal 6.3 mm
Technical drawing from page 90, Circuit drawing from page 109

Indicator and Flasher round, front illumination

Indicator actuator round, front illumination

	Housing	Ø 35 mm Typ-Nr.	Ø 29 mm Typ-Nr.	kg
Indicator actuator round, front illumination	Plastic grey	**704.633.1**	**704.633.1**	0.020

Lens round, flush, plastic

Lenses are usable for round devices in raised and flush mounting

	Lens	Typ-Nr.	kg
Lens round, flush, plastic	Plastic black opaque	**704.602.0**	0.001
	Plastic blue transparent	**704.602.6**	0.001
	Plastic colourless transparent	**704.602.7**	0.001
	Plastic green transparent	**704.602.5**	0.001
	Plastic red transparent	**704.602.2**	0.001
	Plastic yellow transparent	**704.602.4**	0.001

Marking plate for Lens round, flush

	Marking plate	Typ-Nr.	kg
Marking plate for Lens round, flush LED	Plastic colourless transparent ribbed	**704.609.7**	0.001
LED an Filament lamp	Plastic white translucent	**704.609.9**	0.001

Lens round raised, plastic

	Lens	Typ-Nr.	kg
Lens round raised, plastic	Plastic colourless transparent	**704.611.7**	0.002
	Plastic green transparent	**704.611.5**	0.002
	Plastic red transparent	**704.611.2**	0.002
	Plastic yellow transparent	**704.611.4**	0.002

Marking cap for Lens round, raised

	Marking cap	Typ-Nr.	kg
Marking cap for Lens round, raised LED	Plastic colourless transparent ribbed	**704.610.7**	0.001
LED and Filament lamp	Plastic white translucent	**704.610.9**	0.001

Front bezel set for Indicator and Pushbutton, flush mounting

	Front bezel	Ø 35 mm Typ-Nr.	Mounting dimensions	kg
Front bezel set for Indicator and Pushbutton, flush mounting	Aluminium black	**704.955.0**	7	0.015
	Aluminium natural	**704.955.1**	7	0.015
	Stainless-steel natural	**704.955.9**	7	0.033

Mounting dimensions from page 86

Front bezel with protective membrane, flush mounting

for Pushbuttons | Illuminated pushbuttons

	Front bezel	Ø 35 mm Typ-Nr.	kg
Front bezel with protective membrane, flush mounting with transparent silicone membrane	Aluminium black	**704.955.4**	0.016
	Aluminium natural	**704.955.3**	0.016
with transparent silicone membrane, resistant to sea water	Stainless steel natural	**704.955.9E**	0.047

Front ring

	Front ring	Ø 29 mm Typ-Nr.	kg
Front ring	Aluminium black	**704.600.1A**	0.005
	Aluminium natural	**704.600.1**	0.005
	Plastic black	**704.600.0**	0.003
	Plastic light-grey	**704.600.6**	0.003
	Stainless-steel natural	**704.600.9**	0.006
Heigth 16 mm	Plastic light-grey raised	**704.600.7**	0.003

Front protective cap

for Pushbutton | Illuminated pushbutton for protection IP 67

	Front protective cap	Typ-Nr.	kg
Front protective cap only together with Lenses 704.602.X, 704.601.X and Front rings 704.600.X	Silicone colourless transparent	**704.953.0**	0.002

Front protective ring

for Pushbutton | Illuminated pushbutton with front illumination

	Front protective ring	Ø 29 mm Typ-Nr.	kg
Front protective ring with transparent Pebax membrane, temperature resistance -40 °C ... +85 °C	Aluminium natural	**704.600.5/A**	0.005
with transparent silicone membrane (extent resistant to sea water), temperature resistance -40 °C ... +85 °C	Aluminium natural	**704.600.3**	0.005
	Chromed brass	**704.600.2**	0.005

Bayonet flange

	Typ-Nr.	Technical drawing	kg
Bayonet flange Metal	**704.960.5**	46	0.025
Plastic	**704.950.5**	45	0.015

Technical drawing from page 90

Lamp block

	Terminals	Typ-Nr.	Technical drawing	Circuit drawing	kg
Lamp block Standard	PT 6.3	**704.950.1**	39	6	0.012
	ST	**704.950.0**	38	6	0.012
Terminals Cu/Sn nickel plated	D-PT 6.3	**704.950.2/D**	40	6	0.013
Terminals Cu/Sn nickel plated and blank	D-PT 6.3	**704.950.1/D**	40	6	0.013
Terminals for ring cable shoe	ST	**704.950.0B**	38	6	0.013

Terminals: PT 6.3 = Plug-in terminal 6.3 mm, ST = Screw terminal, D-PT 6.3 = Double plug-in terminal 6.3 mm
Technical drawing from page 90, Circuit drawing from page 109

Indicator and Flasher square, front illumination

Indicator actuator square, front illumination

	Front bezel	Housing	⌀ 35 x 35 mm Typ-Nr.	⌀ 30 x 30 mm Typ-Nr.	kg
Indicator actuator square, front illumination	black	Plastic black	**704.743.0**		0.020
	silver	Plastic black	**704.743.8**		0.020
	without	Plastic black		**704.733.0**	0.020
		Plastic grey		**704.733.1**	0.020

Lens square, plastic

	Lens	⌀ 35 x 35 mm Typ-Nr.	⌀ 30 x 30 mm Typ-Nr.	kg
Lens square, plastic	Plastic blue transparent flush	**704.702.6**	**704.702.6**	0.001
	Plastic colourless transparent flush	**704.702.7**	**704.702.7**	0.001
	Plastic green transparent flush	**704.702.5**	**704.702.5**	0.001
	Plastic red transparent flush	**704.702.2**	**704.702.2**	0.001
	Plastic yellow transparent flush	**704.702.4**	**704.702.4**	0.001

Lens holder for Lens square

	Lens holder	Typ-Nr.	kg
Lens holder for Lens square can be marked	translucent white	**704.709.9**	0.003
LED	transparent colourless	**704.709.7**	0.003

Marking foil for Lens square

	Marking foil	Typ-Nr.	kg
Marking foil for Lens square can be hot stamped	Plastic colourless transparent	**704.707.7**	0.001

Front bezel square

	Front bezel	⌑ 30 x 30 mm Typ-Nr.	kg
Front bezel square	Plastic black	**704.701.0**	0.002
	Plastic chromium-plated	**704.701.4**	0.002
	Plastic grey	**704.701.6**	0.002

Bayonet flange

	Typ-Nr.	Technical drawing	kg
Bayonet flange Metal	**704.960.5**	46	0.025
Plastic	**704.950.5**	45	0.015

Technical drawing from page 90

Lamp block

	Terminals	Typ-Nr.	Technical drawing	Circuit drawing	kg
Lamp block Standard	PT 6.3	**704.950.1**	39	6	0.012
	ST	**704.950.0**	38	6	0.012
Terminals Cu/Sn nickel plated	D-PT 6.3	**704.950.2/D**	40	6	0.013
Terminals Cu/Sn nickel plated and blank	D-PT 6.3	**704.950.1/D**	40	6	0.013
Terminals for ring cable shoe	ST	**704.950.0B**	38	6	0.013

Terminals: PT 6.3 = Plug-in terminal 6.3 mm, ST = Screw terminal, D-PT 6.3 = Double plug-in terminal 6.3 mm
Technical drawing from page 90, Circuit drawing from page 109

Pushbutton and Illuminated pushbutton round

Pushbutton- and Illuminated pushbutton actuator round

Actuators usable for devices with front dimension 29 mm dia., raised mounting and 35 mm dia., flush mounting

	Switching action	Housing	Typ-Nr.	kg
Pushbutton- and Illuminated pushbutton actuator round	MA	Plastic grey	**704.632.1**	0.009
	M	Plastic grey	**704.631.1**	0.009

Switching action: MA = Maintained action, M = Momentary action

Lens round, flush, plastic

Lenses are usable for round devices in raised and flush mounting

	Lens	Typ-Nr.	kg
Lens round, flush, plastic	Plastic black opaque	**704.602.0**	0.001
	Plastic blue transparent	**704.602.6**	0.001
	Plastic colourless transparent	**704.602.7**	0.001
	Plastic green transparent	**704.602.5**	0.001
	Plastic red transparent	**704.602.2**	0.001
	Plastic yellow transparent	**704.602.4**	0.001

Marking plate for Lens round, flush

	Marking plate	Typ-Nr.	kg
Marking plate for Lens round, flush LED	Plastic colourless transparent ribbed	**704.609.7**	0.001
LED an Filament lamp	Plastic white translucent	**704.609.9**	0.001

Lens round, metal

	Lens	Ø 29 mm Typ-Nr.	kg
Lens round, metal	Aluminium black flush	**704.601.0**	0.001
	Aluminium blue flush	**704.601.6**	0.001
	Aluminium green flush	**704.601.5**	0.001
	Aluminium natural flush	**704.601.8**	0.001
	Aluminium red flush	**704.601.2**	0.001
	Aluminium yellow flush	**704.601.4**	0.001
	Stainless-steel natural flush	**704.601.9**	0.001

Lens round, metal with window

	Lens	Ø 29 mm Typ-Nr.	kg
Lens round, metal with window	Aluminium black flush	**704.601.01**	0.001
	Aluminium blue flush	**704.601.61**	0.001
	Aluminium green flush	**704.601.51**	0.001
	Aluminium natural flush	**704.601.81**	0.001
	Aluminium red flush	**704.601.21**	0.001
	Aluminium yellow flush	**704.601.41**	0.001
	Stainless-steel natural flush	**704.601.91**	0.001

Front bezel set for Indicator and Pushbutton, flush mounting

	Front bezel	Ø 35 mm Typ-Nr.	Mounting dimensions	kg
Front bezel set for Indicator and Pushbutton, flush mounting	Aluminium black	**704.955.0**	7	0.015
	Aluminium natural	**704.955.1**	7	0.015
	Stainless-steel natural	**704.955.9**	7	0.033

Mounting dimensions from page 86

Front bezel with protective membrane, flush mounting

for Pushbuttons | Illuminated pushbuttons

	Front bezel	Ø 35 mm Typ-Nr.	kg
Front bezel with protective membrane, flush mounting with transparent silicone membrane	Aluminium black	**704.955.4**	0.016
	Aluminium natural	**704.955.3**	0.016
with transparent silicone membrane, resistant to sea water	Stainless steel natural	**704.955.9E**	0.047

Front ring

	Front ring	Ø 29 mm Typ-Nr.	kg
Front ring	Aluminium black	**704.600.1A**	0.005
	Aluminium natural	**704.600.1**	0.005
	Plastic black	**704.600.0**	0.003
	Plastic light-grey	**704.600.6**	0.003
	Stainless-steel natural	**704.600.9**	0.006
Heigth 16 mm	Plastic light-grey raised	**704.600.7**	0.003

Front protective cap

for Pushbutton | Illuminated pushbutton for protection IP 67

	Front protective cap	Typ-Nr.	kg
Front protective cap only together with Lenses 704.602.X, 704.601.X and Front rings 704.600.X	Silicone colourless transparent	**704.953.0**	0.002

Front protective ring

for Pushbutton | Illuminated pushbutton with front illumination

	Front protective ring	Ø 29 mm Typ-Nr.	kg
Front protective ring with transparent Pebax membrane, temperature resistance -40 °C ... +85 °C	Aluminium natural	**704.600.5/A**	0.005
with transparent silicone membrane (extent resistant to sea water), temperature resistance -40 °C ... +85 °C	Aluminium natural	**704.600.3**	0.005
	Chromed brass	**704.600.2**	0.005

Bayonet flange

	Typ-Nr.	Technical drawing	kg
Bayonet flange Metal	**704.960.5**	46	0.025
Plastic	**704.950.5**	45	0.015

Technical drawing from page 90

Lamp block

	Terminals	Typ-Nr.	Technical drawing	Circuit drawing	kg
Lamp block Standard	PT 6.3	**704.950.1**	39	6	0.012
	ST	**704.950.0**	38	6	0.012
Terminals Cu/Sn nickel plated	D-PT 6.3	**704.950.2/D**	40	6	0.013
Terminals Cu/Sn nickel plated and blank	D-PT 6.3	**704.950.1/D**	40	6	0.013
Terminals for ring cable shoe	ST	**704.950.0B**	38	6	0.013

Terminals: PT 6.3 = Plug-in terminal 6.3 mm, ST = Screw terminal, D-PT 6.3 = Double plug-in terminal 6.3 mm
Technical drawing from page 90, Circuit drawing from page 109

Pushbutton and Illuminated pushbutton square

Pushbutton- and Illuminated pushbutton actuator square

	Switching action	Front bezel	Housing	⌀ 35 x 35 mm Typ-Nr.	⌀ 30 x 30 mm Typ-Nr.	kg
Pushbutton- and Illuminated pushbutton actuator square	MA	black	Plastic black	**704.742.0**		0.020
		silver	Plastic black	**704.742.8**		0.020
	M	black	Plastic black	**704.741.0**		0.020
		silver	Plastic black	**704.741.8**		0.020
	MA	without	Plastic black		**704.732.0**	0.020
			Plastic grey		**704.732.1**	0.020
	M	without	Plastic black		**704.731.0**	0.020
			Plastic grey		**704.731.1**	0.020

Switching action: MA = Maintained action, M = Momentary action

Lens square, plastic

	Lens	Typ-Nr.	kg
Lens square, plastic	Plastic black opaque flush	**704.702.0**	0.001
	Plastic blue transparent flush	**704.702.6**	0.001
	Plastic colourless transparent flush	**704.702.7**	0.001
	Plastic green transparent flush	**704.702.5**	0.001
	Plastic red transparent flush	**704.702.2**	0.001
	Plastic white opaque flush	**704.702.9**	0.001
	Plastic yellow transparent flush	**704.702.4**	0.001

Lenses are usable for square devices in raised and flush mounting

Lens holder for Lens square

	Lens holder	Typ-Nr.	kg
Lens holder for Lens square can be marked	translucent white	**704.709.9**	0.003
LED	transparent colourless	**704.709.7**	0.003

Marking foil for Lens square

	Marking foil	Typ-Nr.	kg
Marking foil for Lens square can be hot stamped	Plastic colourless transparent	**704.707.7**	0.001

Front bezel square

	Front bezel	⌀ 30 x 30 mm Typ-Nr.	kg
Front bezel square	Plastic black	**704.701.0**	0.002
	Plastic chromium-plated	**704.701.4**	0.002
	Plastic grey	**704.701.6**	0.002

Bayonet flange

	Typ-Nr.	Technical drawing	kg
Bayonet flange Metal	**704.960.5**	46	0.025
Plastic	**704.950.5**	45	0.015

Technical drawing from page 90

Lamp block

	Terminals	Typ-Nr.	Technical drawing	Circuit drawing	kg
Lamp block Standard	PT 6.3	**704.950.1**	39	6	0.012
	ST	**704.950.0**	38	6	0.012
Terminals Cu/Sn nickel plated	D-PT 6.3	**704.950.2/D**	40	6	0.013
Terminals Cu/Sn nickel plated and blank	D-PT 6.3	**704.950.1/D**	40	6	0.013
Terminals for ring cable shoe	ST	**704.950.0B**	38	6	0.013

Terminals: PT 6.3 = Plug-in terminal 6.3 mm, ST = Screw terminal, D-PT 6.3 = Double plug-in terminal 6.3 mm
Technical drawing from page 90, Circuit drawing from page 109

Snap-action switching element

Switching system

The double-break, snap-action switching element is equipped with one or two independent contact systems, acting as normally open or normally closed contact. The snap-action switching element is fitted with self-cleaning contacts.
Up to 3 switching elements can be snapped to each actuator.
Snap-action switching elements are not permissible for emergency-stop pushbuttons !

Material

Material of contact
Hard Silver, Gold/Silver, Silver/Palladium (for aggressive atmospheres)

Switch housing
Polycarbonate (PC)

Mechanical characteristics

Terminals
Screw terminals
Plug-in terminals 6.3 x 0.8 mm
max. wire cross-section 2 x 2.5 mm²
max. wire cross-section of stranded cable 2 x 1.5 mm²
For switches with plug-in terminals it is necessary to provide insulation sleeves and to maintain a spacing of 65 mm between rows (mounting dimensions)

Tightening torque
Screws at the mounting flange max. 25 Ncm
Screws at switching element max. 50 Ncm

Actuating force
1 Normally closed 1.9 N
1 Normally open 2 N

Actuating travel
5.8 mm ± 0.2 mm

Rebound time
≤3 ms

Mechanical lifetime
(with 1 switching element)

Pushbutton, maintained action	1.5 million	Cycles of operation
Pushbutton momentary action	3 million	Cycles of operation
Selector switch maintained action	1.25 million	Cycles of operation
Selector switch momentary action	2.5 million	Cycles of operation
Keylock switch maintained action	25 000	Cycles of operation
Keylock switch momentary action	50 000	Cycles of operation

Electrical characteristics

Standards
The switches comply with the "Standards for low-voltage switching devices" EN IEC 60947-5-1

Rated Insulation Voltage U_i
500 VAC/600 VDC, as per EN IEC 60947-5-1

Contact resistance
New state ≤50 mΩ as per DIN IEC 60512-2-4

Conventional free air thermal current I_{th}
10 A, as per EN IEC 60947-5-1
the maximum current in continuous operation and at ambient temperature must not exceed the quoted maximum values.

Isolation resistance
≥10 MΩ between open contacts at 500 VDC, as per DIN IEC 60512-2-10

Switch rating
At switch rating AC for Gold/Silver, Silver/Palladium and Hard Silver contacts service category AC-15, as per EN IEC 60947-5-1 (cosϕ 0.3)

Voltage	230 VAC	400 VAC	500 VAC
Current	6 A	4 A	2.5 A

At switch rating DC for Gold-, Silver- and Hard Silver contacts service category DC-13, as per EN IEC 60947-5-1

Voltage	24 VDC	60 VDC	110 VDC
Current	10 A	3 A	1 A

Recommended minimum operational data
Gold/Silver contacts :

Voltage	5 VDC	24 VDC	110 VDC
Current	15 mA	5 mA	2 mA

Hard Silver contacts :

Voltage	24 VDC	110 VDC
Current	50 mA	10 mA

Protection class
Indicators and switches, fit for mounting into devices with protection class II

Environmental conditions

Storage temperature
-40 °C ... +85 °C

Operating temperature
-25 °C ... +55 °C

Shock resistance
(single impacts, semi-sinusoidal)
300 m/s²puls width 11 ms, as per EN IEC 60068-2-27

Vibration resistance
(sinusoidal)
100 m/s² at 10 Hz ... 500 Hz, amplitude 0,75 mm, as per EN IEC 60068-2-6

Approvals

Approbations
CB (IEC 60947)
CCC
CSA
Germanischer Lloyd
GOST
SEV
UL

Declaration of conformity
CE
RoHS

Slow-make switching element

Switching system

The double-break, slow-make switching element is equipped with one or two independent contact systems, acting as normally open or normally closed contact. The normally closed contact has forced opening.
Slow-make contacts with forced action are ideal for high switch ratings.
Up to 3 switching elements can be snapped to each actuator.
For the emergency-stop pushbutton use the slow-make switching element (max. 2).

Material

Material of contact
Hard Silver, Gold/Silver, Silver/Palladium (for aggressive atmospheres)

Switch housing
Polycarbonate (PC)

Mechanical characteristics

Terminals
Screw terminals
Plug-in terminals 6.3 x 0.8 mm
max. wire cross-section 2 x 2.5 mm²
max. wire cross-section of stranded cable 2 x 1.5 mm²
For switches with plug-in terminals it is necessary to provide insulation sleeves and to maintain a spacing of 65 mm between rows (mounting dimensions)

Tightening torque
Screws at the mounting flange max. 25 Ncm
Screws at switching element max. 50 Ncm

Actuating force
1 Normally closed 2 N
1 Normally open 3.1 N

Actuating travel
5.8 mm ± 0.2 mm

Rebound time
≤1 ms

Mechanical lifetime
(with 1 switching element)

Pushbutton, maintained action	1.5 million	Cycles of operation
Pushbutton momentary action	3 million	Cycles of operation
Selector switch maintained action	1.25 million	Cycles of operation
Selector switch momentary action	2.5 million	Cycles of operation
Emergency-stop switch	50 000	Cycles of operation
Keylock switch maintained action	25 000	Cycles of operation
Keylock switch momentary action	50 000	Cycles of operation

Electrical characteristics

Standards
The switches comply with the "Standards for low-voltage switching devices" EN IEC 60947-5-1

Rated Insulation Voltage U_i
500 VAC/600 VDC, as per EN IEC 60947-5-1

Contact resistance
New state ≤50 mΩ as per DIN IEC 60512-2-4

Isolation resistance
≥10 MΩ between open contacts at 500 VDC, as per DIN IEC 60512-2-10

Conventional free air thermal current I_{th}
10 A, as per EN IEC 60947-5-1
the maximum current in continuous operation and at ambient temperature must not exceed the quoted maximum values.

Switch rating
At switch rating AC for Gold/Silver, Silver/Palladium and Hard Silver contacts service category AC-15, as per EN IEC 60947-5-1 (cosϕ 0.3)

Voltage	230 VAC	400 VAC	500 VAC
Current	7 A	5 A	4 A

At switch rating DC for Gold-, Silver- and Hard Silver contacts service category DC-13, as per EN IEC 60947-5-1

Voltage	24 VDC	60 VDC	110 VDC	250 VDC
Current	10 A	5 A	2.5 A	0.6 A

Recommended minimum operational data
Gold/Silver contacts :

Voltage	24 VDC	110 VDC
Current	10 mA	2 mA

Hard Silver contacts :

Voltage	24 VDC	110 VDC
Current	50 mA	10 mA

Protection class
Indicators and switches, fit for mounting into devices with protection class II

Environmental conditions

Storage temperature
-40 °C ... +85 °C

Operating temperature
-25 °C ... +55 °C

Shock resistance
(single impacts, semi-sinusoidal)
300 m/s²puls width 11 ms, as per EN IEC 60068-2-27

Vibration resistance
(sinusoidal)
100 m/s² at 10 Hz ... 500 Hz, amplitude 0,75 mm, as per EN IEC 60068-2-6

Approvals

Approbations
CB (IEC 60947)
CCC
CSA
Germanischer Lloyd
GOST
SEV
UL

Declaration of conformity
CE
RoHS

Buzzer

Buzzer system

System
Piezo disc

Material

Alarm buzzer case
Polyamide

Front cap
Plastic Polyamide
Metal Nickel-plated brass (sea-water proof)

Mechanical characteristics

Terminals
Plug-in terminal 2.8 x 0.5 mm

Electrical characteristics

Frequency (tone)
approx. 2.8 kHz continuous tone only

Sound pressure
95 db (A) ±8 dB at a distance of 0.1 m

Operation Voltage/Current

Operation Voltage	24 VDC ±10 %
Operation Current	≤25 mA

Environmental conditions

Storage temperature
-35 °C ... +85 °C

Operating temperature
-25 °C ... +55 °C

Protection degree
as per EN IEC 60529, frontside
IP 40, devices flush mounting
IP 65, devices raised mounting

Approvals

Declaration of conformity
CE
RoHS

Actuator

Material

Front ring
Polyamide, Aluminium or Stainless steel

Mounting flange
Polyethylene terephtalate

Actuator housing
Polycarbonate, Polyamide

Mechanical characteristics

Actuating force
Mounting style square flush 6.2 N
other Mounting styles 8 N

Actuating travel
5.8 mm ± 0.2 mm

Mechanical lifetime
(with 1 switching element)

Pushbutton	≤3 million	Cycles of operation
Selector switch	≤2.5 million	Cycles of operation
Stop switch	≤50 000	Cycles of operation
Fool proofed E-stop	≥6050	Cycles of operation
Keylock switch	≤50 000	Cycles of operation
Key insert switches	≤250 000	Cycles of operation

Electrical characteristics

Standards
The switches comply with the "Rules for low-voltage switching devices" EN IEC 60947-5-1

Environmental conditions

Storage temperature
-30 °C ... +85 °C

Operating temperature
-25 °C ... +55 °C (with LED)
-25 °C ... +40 °C (with filament lamp)
-40 °C ... +85 °C (Key insert switch)

Protection degree
as per EN IEC 60529
frontside IP 65 (IP 67 Key insert switch)

Rotary selector switch element

Mechanical characteristics

Terminals
Screw terminals
Terminal lead material copper wires only
max. permissible wire gage :
Single-core or stranded wire 2 x 1.5 mm² (2 x AWG 14)
flexible wire 2 x 1,5 mm² (2 x AWG 16)

Number of stages
1 to 8 positions max.

Number of contacts
1 to 16 max. normally open contacts
(contact positioning according circuit drawing)

Switching angle
Basic position of switching position "a" is 9 o'clock

Maintained action	Switching angle
12 max.	30 °
8 max.	45 °
6 max.	60 °
4 max.	90 °

Momentary action with release 24 °
(provide at the beginning or at the end)

Standard type of Kraus & Naimer
CG4 Hard Silver contacts with 1 µm Gold layer
CG4-1 Hard Silver contacts with 35 µm Gold layer

Electrical characteristics

Minimum Voltage
20 V

Rated Impulse Withstand Voltage U_{imp}
4 kV

Short Circuit Protection
Max. fuse size (gL- characteristic) 10 A
Rated short-time withstand current (1s-current) 90 A

Electrical characteristics for AC

Standards
The devices comply with : EN IEC 60947-3, VDE 0660 part 107

Rated Operational Voltage U_e
440 V

Rated Insulation Voltage U_i
440 V

Rated Thermal Current I_u/I_{th}
10 A

Rated Operational Current I_e
AC-15 Switching of control devices, contactors, valves etc.

110 V - 120 V	2.5 A
220 V - 240 V	2.5 A
380 V - 440 V	1.5 A

No load operation
10 A

AC-21A Switching of resistive loads, including moderate overloads
For switchin of power >1 kW
10 A

AC-22A Switching of combined resistive or low inductive loads including moderate overloads

220 V - 240 V	10 A

Rated Utilization Category
AC-2 Slip ring motor starting, reversing and plugging, star-delta starting 3 phase, 3 pole

220 V - 240 V	2.5 kW
380 V - 440 V	4.5 kW

AC-3 Direct-on-line starting, star-delta starting

3 phase, 3 pole	220 V - 240 V	2.5 kW
	380 V - 440 V	2.2 kW
1 phase, 2 pole	110 V - 120 V	0.3 kW
	220 V - 240 V	0.55 kW
	380 V - 440 V	0.75 kW

AC-Direct-on-line starting, reversing, plugging and inching

3 phase, 3 pole	220 V - 240 V	0.37 kW
	380 V - 440 V	0.55 kW
1 phase, 2 pole	110 V - 120 V	0.15 kW
	220 V - 240 V	0.25 kW
	380 V - 440 V	0.5 kW

AC-23A Frequent switching of motors or other high inductive loads

3 phase, 3 pole	220 V - 240 V	1.8 kW
	380 V - 440 V	3 kW
1 phase, 2 pole	110 V - 120 V	0.37 kW
	220 V - 240 V	0.75 kW
	380 V - 440 V	1.1 kW

Overvoltage category
III, valid for lines with grounded common neutral termination

Degree of pollution
3, valid for lines with grounded common neutral termination

Electrical characteristics for AC (UL/Canada)

Rated operational voltage
300 V

Rated Insulation Voltage U_i
300 V

Rated Thermal Current
10 A

Ampere Rating
Resisitve or low inductive loads, for switching of power >1 kW, 10 A

Ratings
Standard motor load, DOL Rating (similar AC-3)

3 phase, 3 pole	110 V - 120 V	0.75 HP
	220 V - 240 V	1 HP
1 phase, 2 pole	110 V - 120 V	0.33 HP
	220 V - 240 V	0.75 HP
	277 V - 277 V	0.75 HP

Pilot Duty, Heavy
300 VAC

Electrical characteristics for DC

Switch Rating DC
Resistive loads T ≤1 ms

Number of series contact(s)							Switch
1	2	3	4	5	6	8	Capacity
24 V	48 V	70 V	95 V	120 V	145 V	190 V	10 A
48 V	95 V	140 V	190 V	240 V	290 V	350 V	6 A
60 V	120 V	180 V	240 V	300 V	360 V	450 V	2.5 A
110 V	220 V	330 V	440 V	550 V	660 V		0.7 A
220 V	440 V	660 V					0.3 A
440 V	660 V						0.2 A

Inductive loads T = 50 ms

Number of series contact(s)							Switch
1	2	3	4	5	6	8	Capacity
24 V	48 V	70 V	95 V	120 V	145 V	190 V	6 A
30 V	60 V	90 V	120 V	150 V	180 V	240 V	3 A
48 V	95 V	140 V	190 V	240 V	290 V	350 V	1 A
60 V	120 V	180 V	240 V	300 V	360 V	450 V	0.7 A
110 V	220 V	330 V	440 V	550 V	660 V		0.3 A

Environmental conditions

Operating temperature
Ambient Temperatures of Stages

open at 100 % I_u/I_{th}	55 °C during 24 h with peaks up to 60 °C
enclosed at 100 % I_{the}	35 °C during 24 h with peaks up to 40 °C

Flasher element

Do not connect terminal c and f simultaneously when powered up.

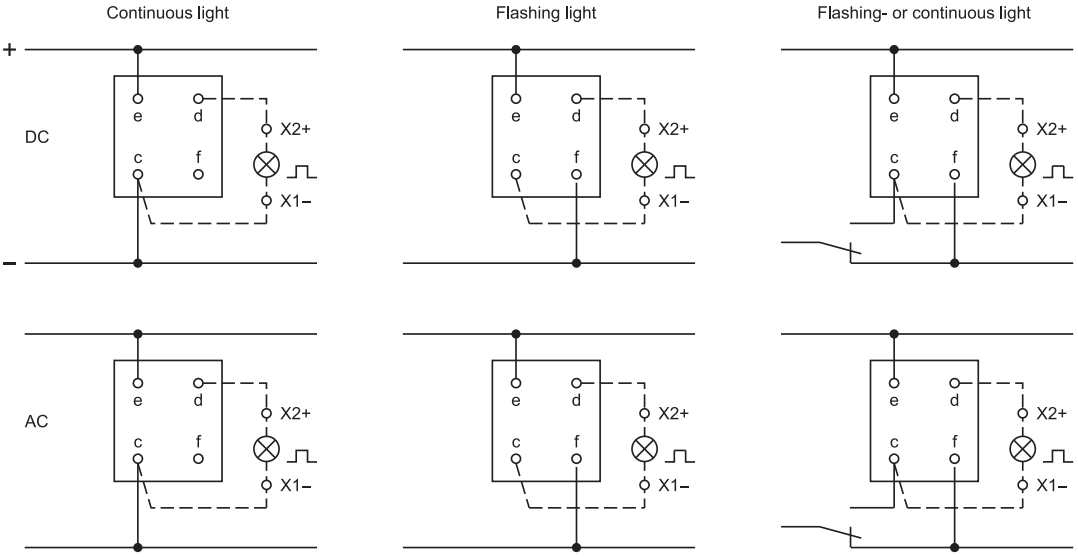

General notes

1. Engraving
In addition to the most commonly used world languages, in DIN 1451-3 close spacing, other typefaces are available as Scandinavian, Slavic, Greek, Russian and Polish.
The lenses are filled with black or white colour. Standard height of letters is 3 mm. If the height is not specified, we will supply 3 mm engraved letters.

2. Hot stamping
Standard legends and ISO symbols are hot stamped. For larger series it is worth considering markings by means of hot stamping. We will pleased to advise you.

3. Film inserts
Instead of using engraving the square lenses can be fitted with film inserts, as an alternative. Film thickness is 0.25 mm.
Max. film size :
for Indicator 24.5 mm x 24.5 mm
for illuminated Pushbutton 21.5 x 21.5 mm.

Engraving marking cap for Indicator round, full face illumination

All dimensions in mm

Height of letters	Number of lines	Number of (target value) letters per line			Line spacing
h		b1	b2	b3	d
3	3	11	10	9	4.6
4	2	8	7	-	6.6
8	1	4	-	-	-

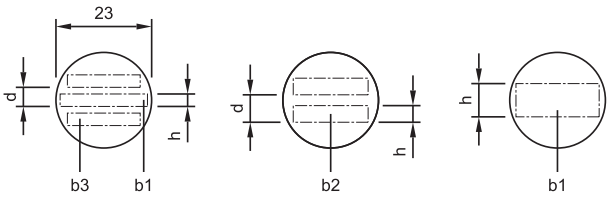

The gap between 2 words results in each case a letter less.

Engraving marking cap for Indicator and illuminated Pushbutton round, front illumination

All dimensions in mm

Height of letters	Number of lines	Number of (target value) letters per line			Line spacing
h		b1	b2	b3	d
3	3	9	9	7	4.6
4	2	7	6	-	6.6
8	1	3	-	-	-

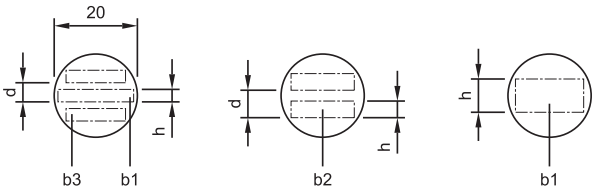

The gap between 2 words results in each case a letter less.

Engraving diffusor cap for Indicator square, full face illumination

All dimensions in mm

Height of letters h	Number of lines	Number of (target value) capital letters per line	Number of (target value) small letters per line
2.5	6	13	14
3.0	5	11	12
4.0	4	8	8 - 9
5.0	3	6 - 7	7
6.0	2	5 - 6	6
8.0	1	4	4 - 5

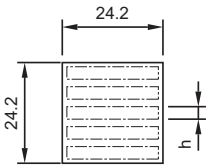

The gap between 2 words results in each case a letter less.

Engraving lens holder for Indicator and Illuminate Pushbutton square, front illumination

All dimensions in mm

Height of letters h	Number of lines	Number of (target value) capital letters per line	Number of (target value) small letters per line
2.5	5	9	9 - 10
3.0	4	7 - 8	8
4.0	3	5 - 6	6
5.0	2	4 - 5	4 - 5
6.0	2	3 - 4	4
8.0	1	2 - 3	3

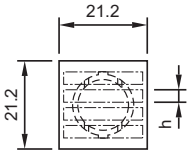

The gap between 2 words results in each case a letter less.

Important : Consider lens holder mounting orientation before specifying engraving charachters !

Engraving legend plates

All dimensions in mm

Dimension	Devices mounting style	Height of letters h	Number of lines	Number of (target value) letters per line	Image
30 x 50	round, raised	3	2	12	B1
		4	1	7	B1
		8	1	4	B1
35 x 57.5	round, flush	3	2	12	B2
		4	1	7	B2
		8	1	4	B2
18 x 35	square, flush	3	3	16	B3
		4	2	10	B3
		8	1	6	B3

B1

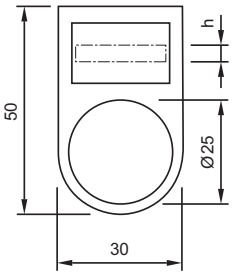

B2

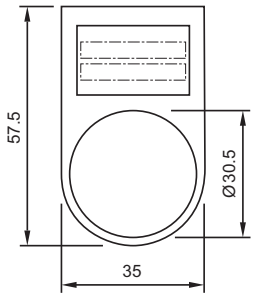

B3

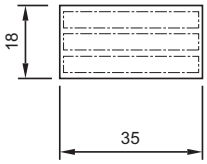

The gap between 2 words results in each case a letter less.

Standard texts for marking plates and marking caps for Indicator and Illuminated Pushbutton

Height of letters 6 mm

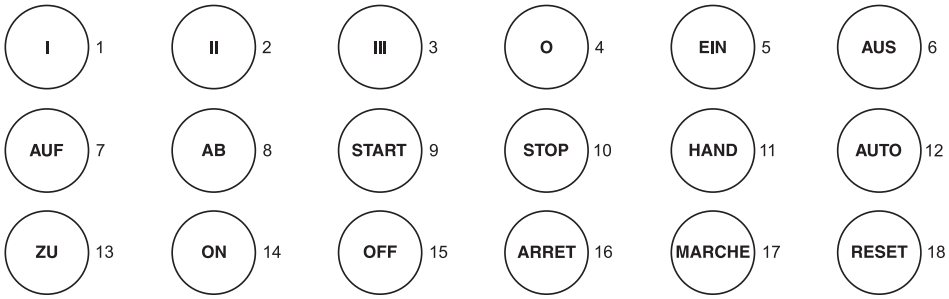

Symbols for marking plates and marking caps for Indicator and Illuminated Pushbutton

1	Direction of linear rectilinear motion (also for → ↓↑)	13	Direction of spindle rotation	29	Decrease of value (speed, for instance)	49	Cooling pump
2	Linear motion in in 2 directions (also for ↕)	14	One revolution	30	Speed of planing cut (m/min)	50	Lubricant pump
3	Interrupted linear motion (also for ← ← ↓↑ ↑↓)	15	Number of revolutions per minute (spindle speed) (/min)	31	Speed of turning cut (m/min)	51	Hydraulic system pump
4	Limited linear motion (also for ← ↑↓)	16	Feed	32	Speed of drilling cut (m/min)	52	Hydraulic motor
5	Limited linear motion and return	17	Feed per revolution (mm/)	33	Speed of milling cut (similar symbol fpr speed of grinding) (m/min)	53	Tracer
6	Oscillating linear motion (continuous)	18	Feed per minute (mm/min)	34	Conventional milling	61	Stepless regulation
7	Direction of continuous rotation (right)	19	Reduced feed (1/)	35	Climb milling (down milling)	62	Adjustable
7a	Direction of continuous rotation (left)	20	Rapid feed (/1)	41	Electric motor	63.1	Lock or tighten
8	Rotation in 2 directions	21	Normal feed (1/1)	42	Rectangular work table or slide element	63.2	Lock or tighten
9	Direction of interrupted rotation (right)	22	Direction of feed (orientation not specified)	43	Round work table or rotating element	64.1	Unlock, unclamp
9a	Direction of interrupted rotation (left)	24	Transverse feed	44	Turning spindle	64.2	Chuck open
10	Limited rotation (right)	25	Vertical feed	45	Drilling spindle	65	Brake on
10a	Limited rotation (left)	26	Rapid traverse	46	Milling spindle	66	Brake off
11	Limited rotation and return	27	Threading	47	Grinding spindle	67	Automatic (or semi-automatic) cycle
12	Oscillating rotary movement (continuous)	28	Increase of value (speed, for instance)	48	Pump (general symbol)	68	Hand control

Continuation see next page

Continued from previous page

69	Start, on	77	Open lock-nut	93	Caution!	106	Drain
70	Stop, off	78	Engage sensor	94	Main switch	107	Oil, lubricant
71	Start and stop with same button	79	Disengage sensor	101	Coolant fluid	108	Blast
72	In action as long as button is operated	80	Change speed only in stopped position	102	Machine lighting	109	Suction
74	Engaging (mechanical start)	81	Change speed only in motion	103	Weight		
75	Disengaging (mechanical stop)	91	Shear pin construction	104	Filter opening		
76	Close lock-nut	92	Danger (high voltage)	105	Overflow		

Mounting dimensions

1 Rotary selector switch actuator, short lever, flush mounting page 43 **| Rotary selector switch actuator, long lever, flush mounting** page 43

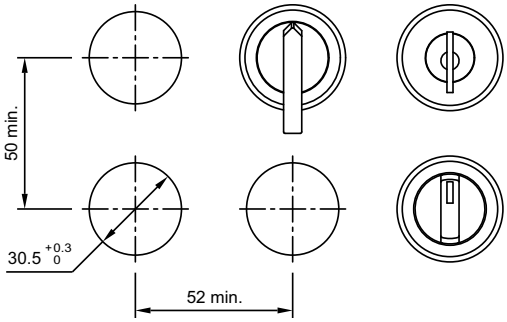

2 Emergency-stop pushbutton actuator, foolproof EN IEC 60947-5-5 page 21

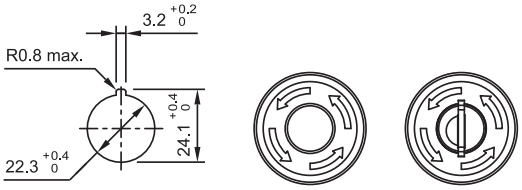

3 Indicator full-face illumination compact page 12

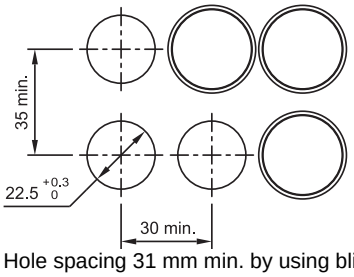

Hole spacing 31 mm min. by using blind plug 704.960.4

4 Rotary selector switch actuator, short lever page 30 **| Rotary selector switch actuator, long lever** page 30

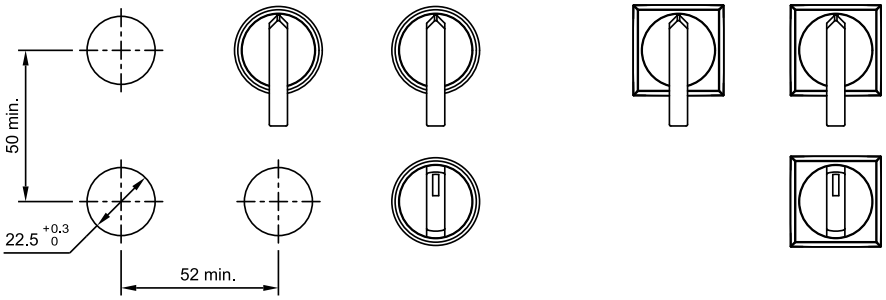

5 Indicator full face illumination page 13 **| Indicator front illumination** page 14 **| Flasher full face illumination** page 15 **| Flasher front illumination** page 16 **| Buzzer** page 17 **| Pushbutton actuator** page 18 **| Illuminated pushbutton actuator** page 20 **| Keylock switch actuator 2 positions** page 25 **| Keylock switch actuator 3 positions** page 26 **| Selector switch actuator 2 positions, short lever** page 27 **| Selector switch actuator 3 positions, short lever** page 28

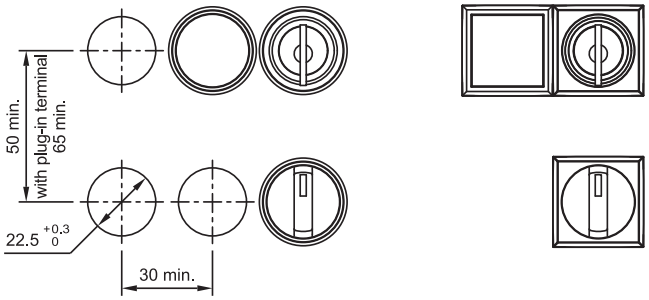

Hole spacing 31 mm min. by using blind plug 704.960.4

6 Selector switch actuator 2 positions, long lever page 27 **| Selector switch actuator 3 positions, long lever long** page 29

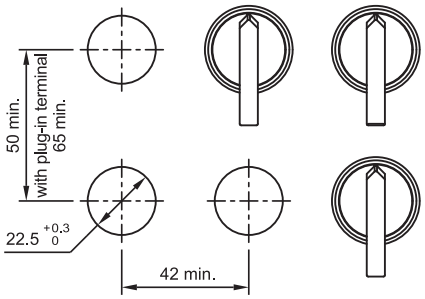

7 Indicator, flush mounting page 31 **| Flasher, flush mounting** page 32 **| Buzzer, flush mounting** page 32 **| Pushbutton actuator, flush mounting** page 33 **| Illuminated pushbutton actuator, flush mounting** page 35 **| Keylock switch actuator 2 positions, flush mounting** page 37 **| Keylock switch actuator 3 positions, flush mounting** page 38 **| Selector switch actuator 2 positions, short lever, flush mounting** page 39 **| Selector switch actuator 2 positions, long lever, flush mounting** page 40 **| Selector switch actuator 3 positions, short lever, flush mounting** page 41 **| Keylock rotary switch actuator, flush mounting** page 44 **| Front bezel set for Indicator and Pushbutton, flush mounting** page 66 **| Front bezel set for Indicator and Pushbutton, flush mounting** page 71

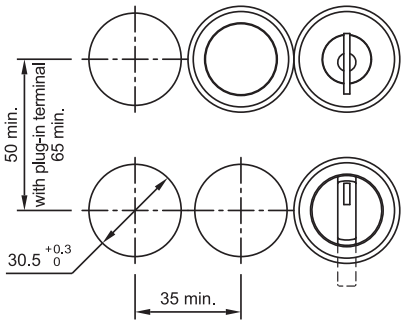

8 Selector switch actuator 3 positions, long lever, flush mounting page 42

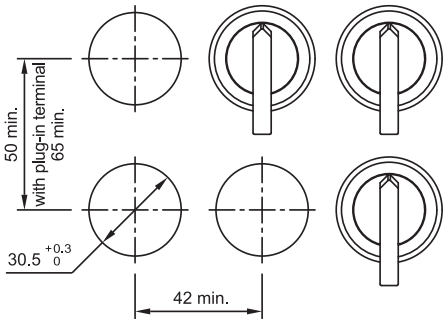

9 Stop pushbutton actuator page 22 **| Mushroom-head pushbutton actuator** page 23 **| Mushroom-head pushbutton actuator illuminated** page 24

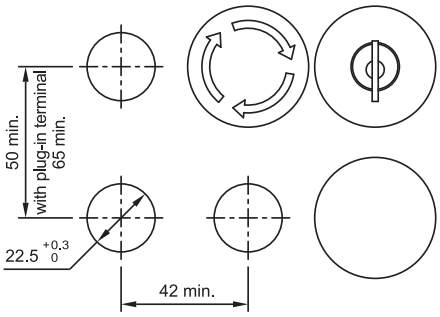

10 Stop pusbutton actuator, flush mounting page 36 **| Mushroom-head pushbutton actuator, flush mounting** page 36

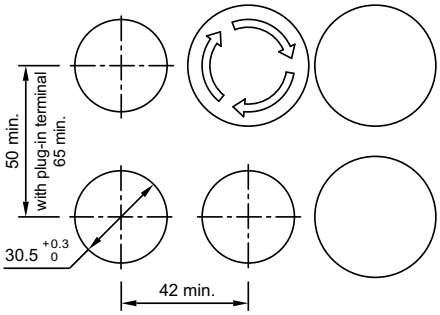

11 Key insert switch actuator 2 positions, flush mounting page 44 **| Key insert switch actuator 3 positions, flush mounting** page 45

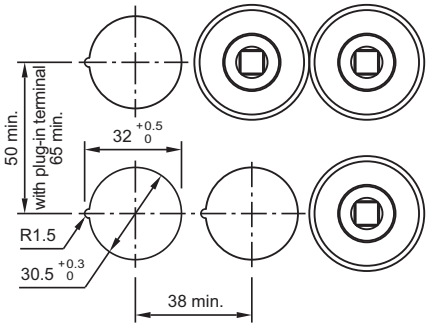

12 Indicator, flush mounting page 31 **| Flasher, flush mounting** page 32 **| Pushbutton actuator, flush mounting** page 33 **| Illuminated pushbutton actuator, flush mounting** page 35 **| Keylock switch actuator 2 positions, flush mounting** page 37 **| Keylock switch actuator 3 positions, flush mounting** page 38 **| Selector switch actuator 2 positions, short lever, flush mounting** page 39 **| Selector switch actuator 3 positions, short lever, flush mounting** page 41

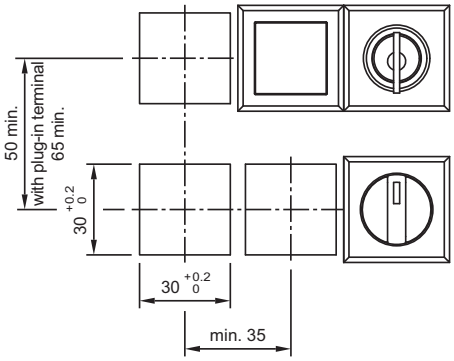

13 Selector switch actuator 2 positions, long lever, flush mounting page 40 **| Selector switch actuator 3 positions, long lever, flush mounting** page 42

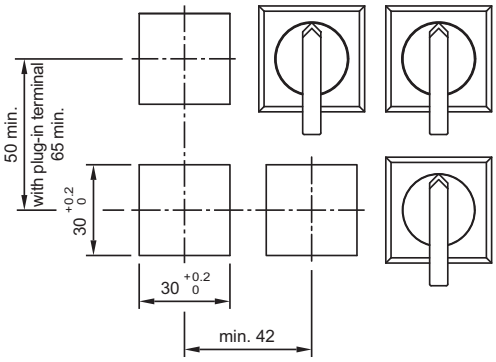

14 Rotary selector switch actuator, short lever, flush mounting page 43 **| Rotary selector switch actuator, long lever, flush mounting** page 43

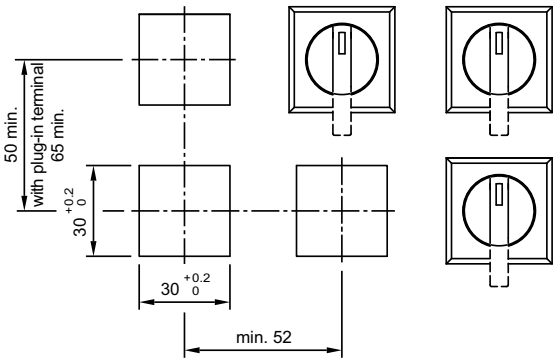

15 Key insert switch actuator 3 positions Conductor Switch, flush mounting page 45

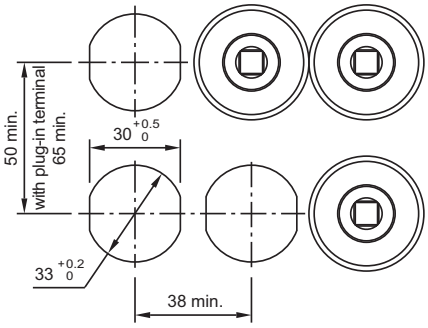

Technical drawing

1 Key insert switch actuator 2 positions, flush mounting page 44 **| Key insert switch actuator 3 positions, flush mounting** page 45

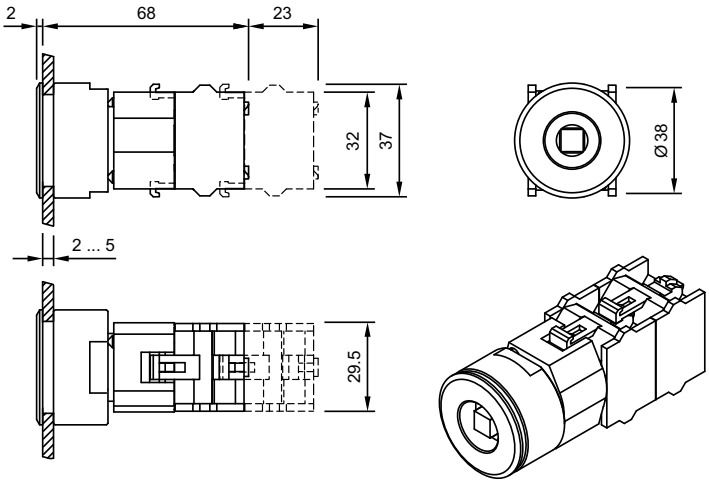

2 Indicator full-face illumination compact page 12

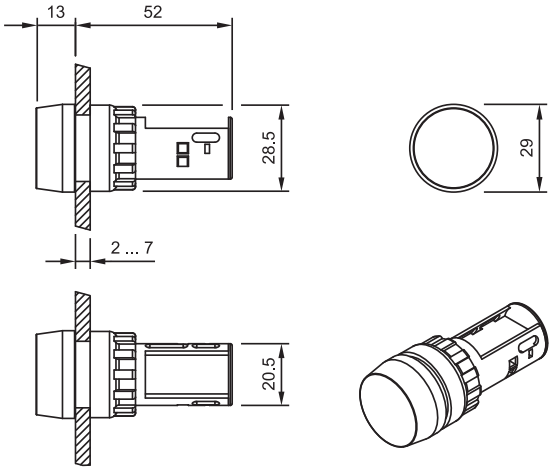

3 Indicator full face illumination page 13

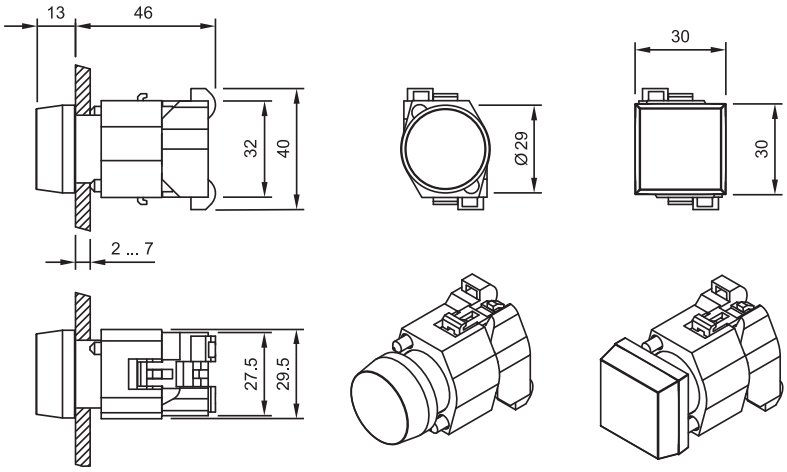

4 Pushbutton actuator page 18

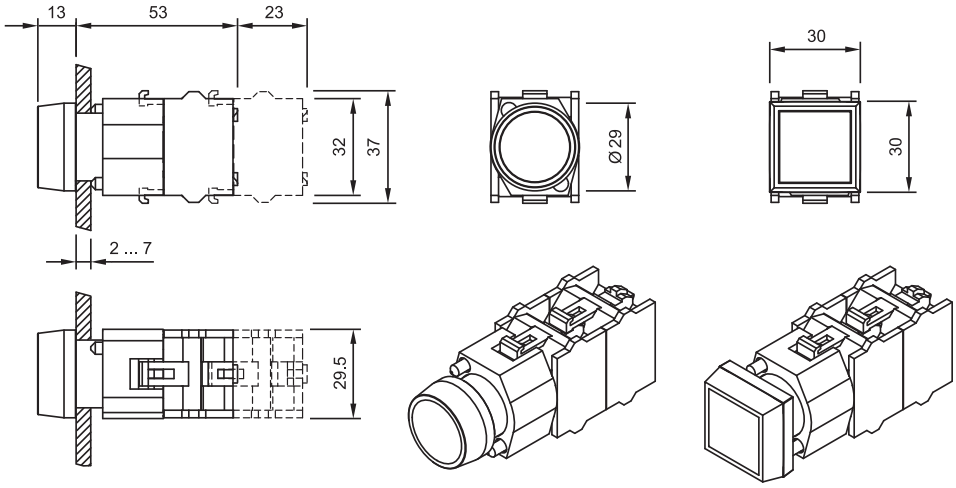

5 Indicator front illumination page 14

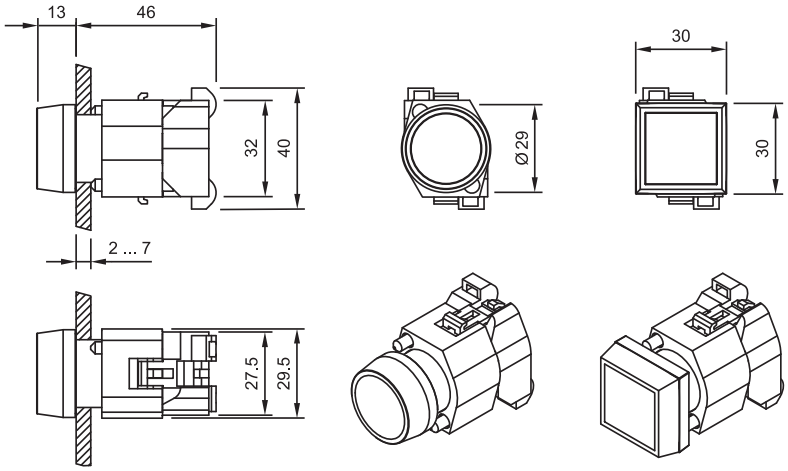

6 Flasher full face illumination page 15

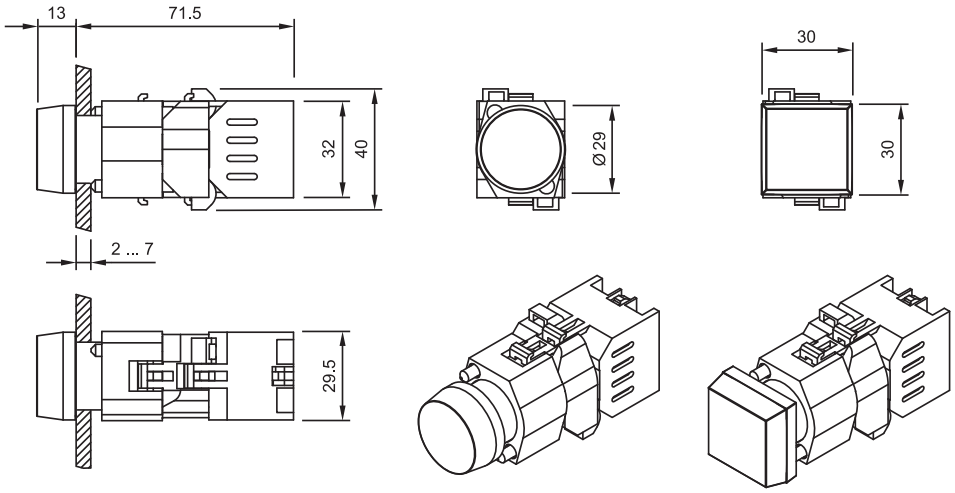

7 Flasher front illumination page 16

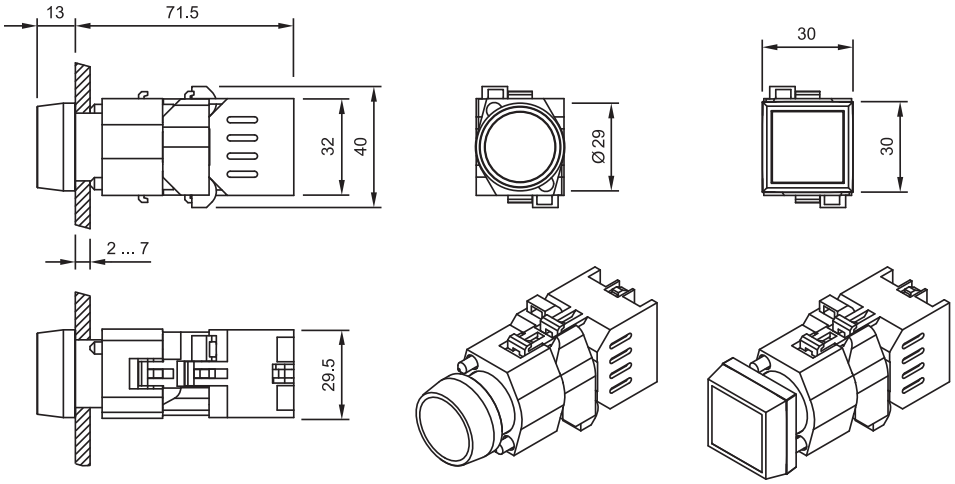

8 Illuminated pushbutton actuator page 20

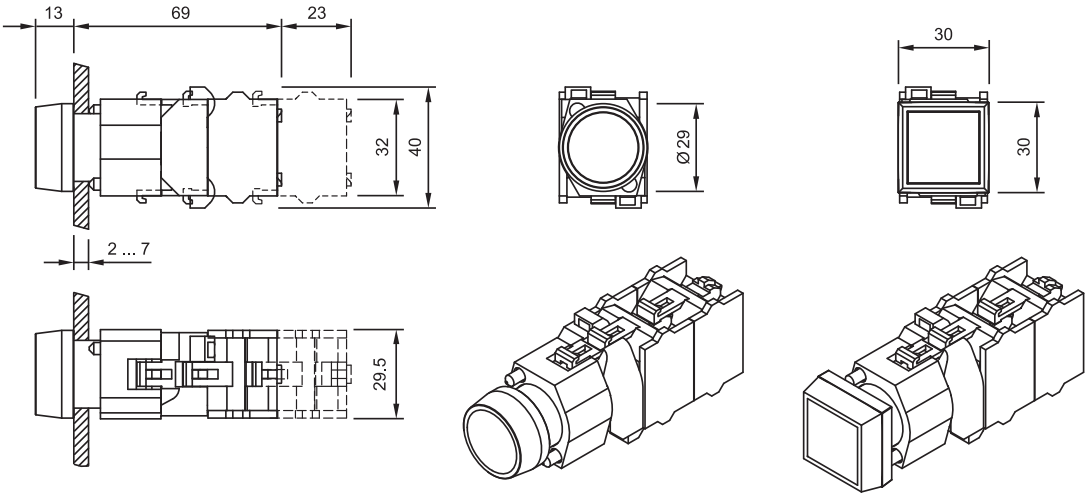

9 Keylock switch actuator 2 positions page 25 **| Keylock switch actuator 3 positions** page 26

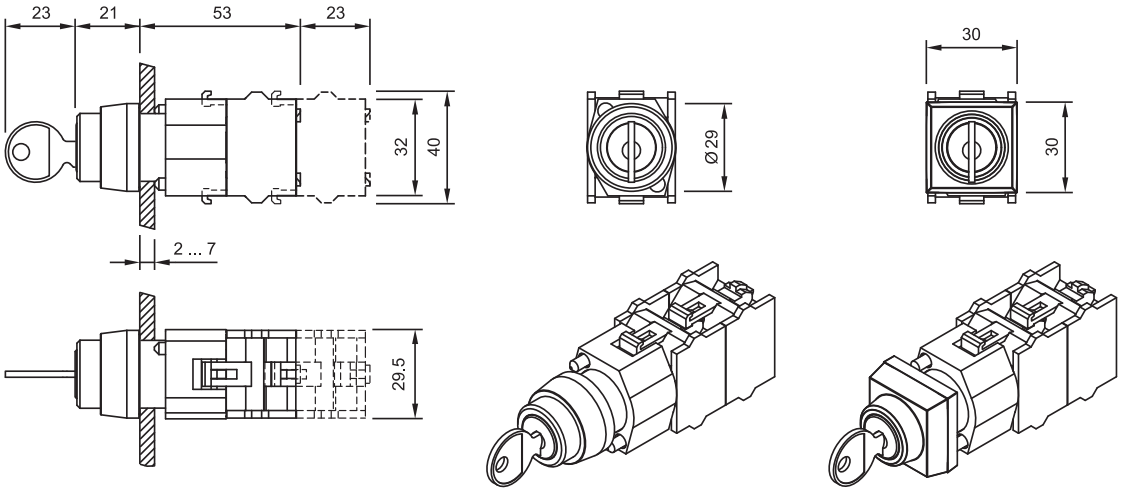

10 Selector switch actuator 2 positions, long lever page 27 **| Selector switch actuator 3 positions, long lever long** page 29

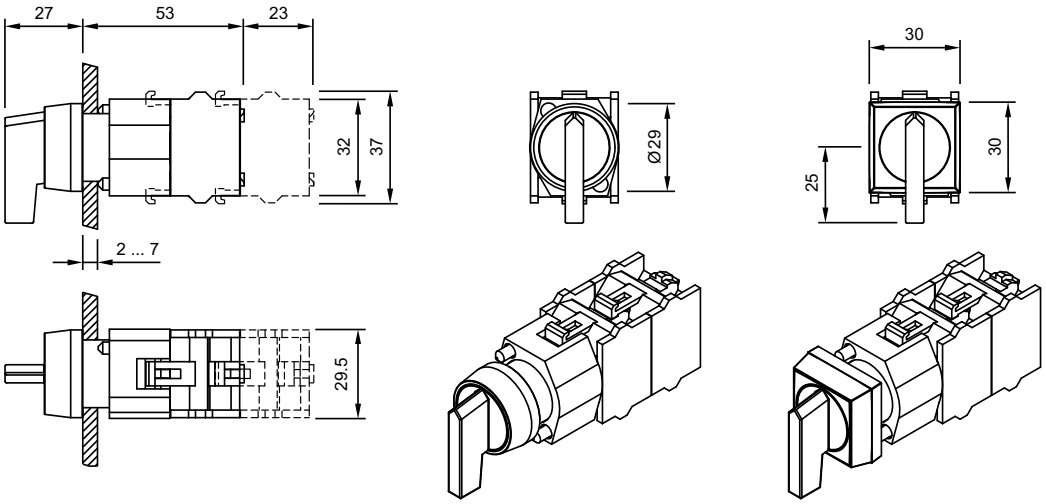

11 Selector switch actuator 2 positions, short lever page 27 **| Selector switch actuator 3 positions, short lever** page 28

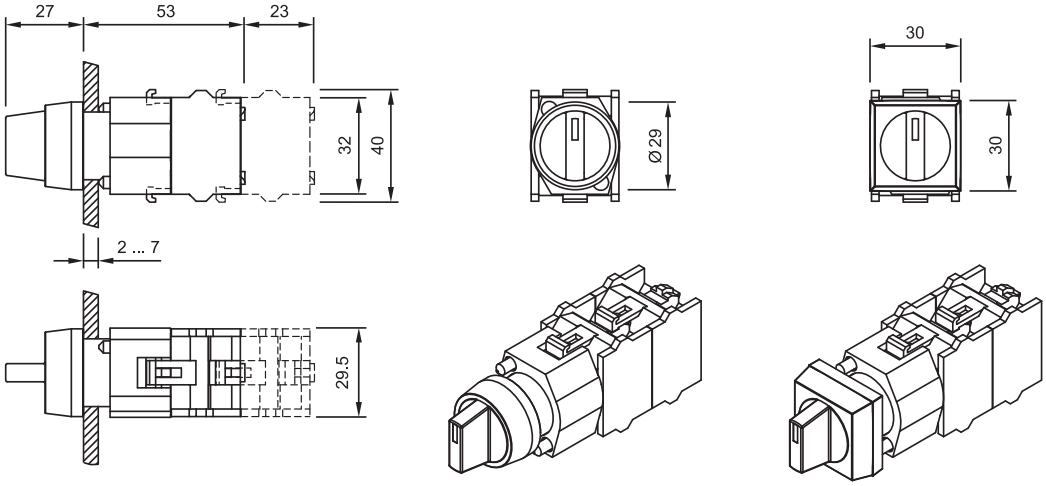

12 Stop pushbutton actuator page 22

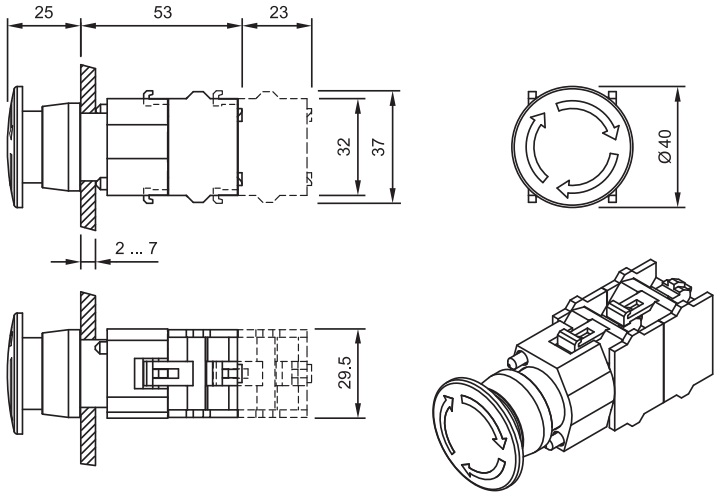

13 Mushroom-head pushbutton actuator illuminated page 24

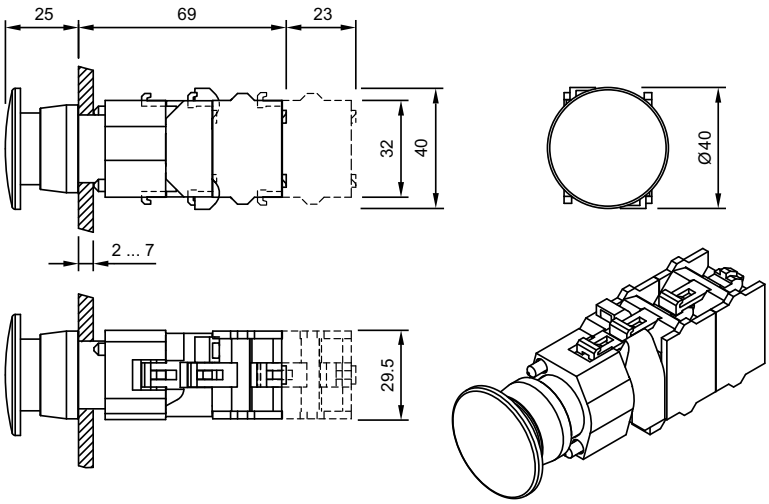

14 Emergency-stop pushbutton actuator, foolproof EN IEC 60947-5-5 page 21

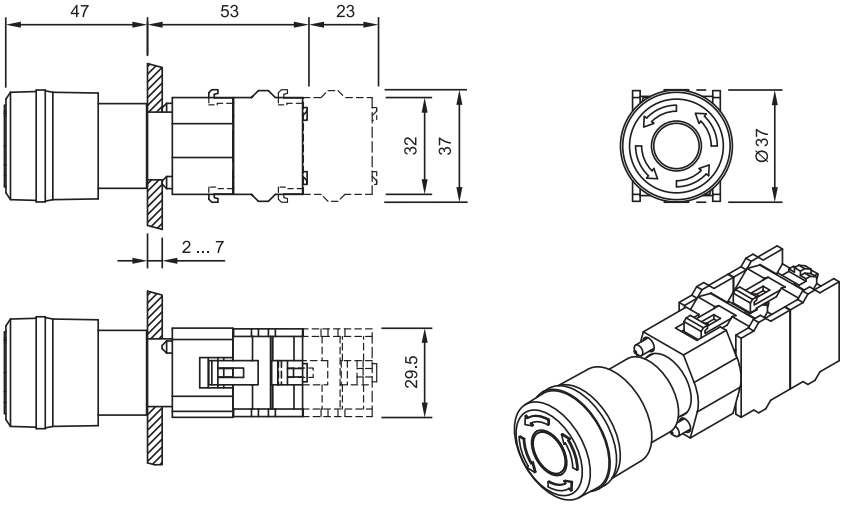

15 Mushroom-head pushbutton actuator page 23

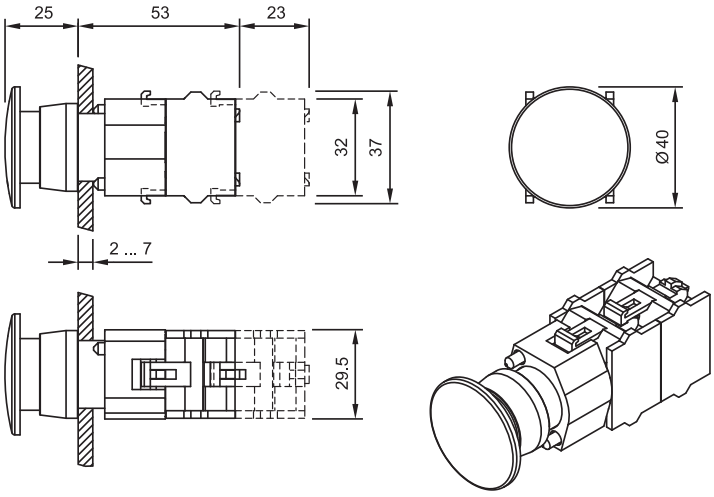

16 Selector switch actuator 2 positions, long lever, flush mounting page 40 **| Selector switch actuator 3 positions, long lever, flush mounting** page 42

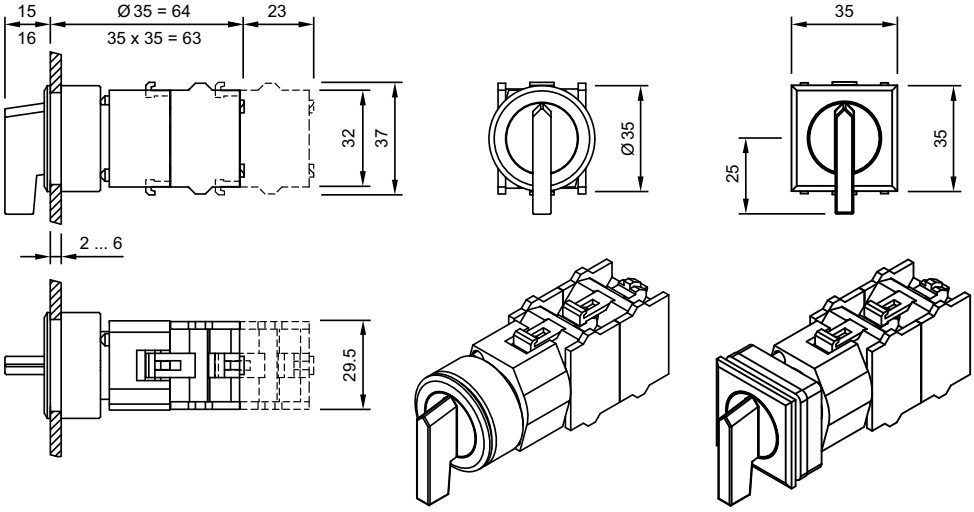

17 Stop pushbutton actuator page 22

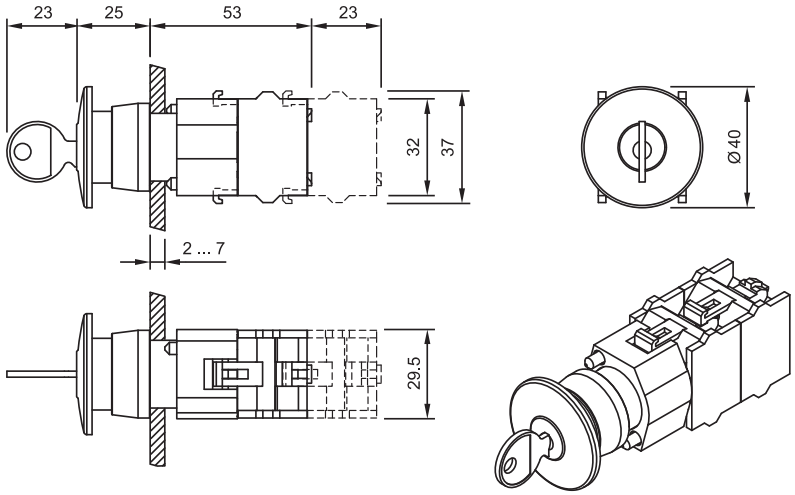

18 Buzzer page 17

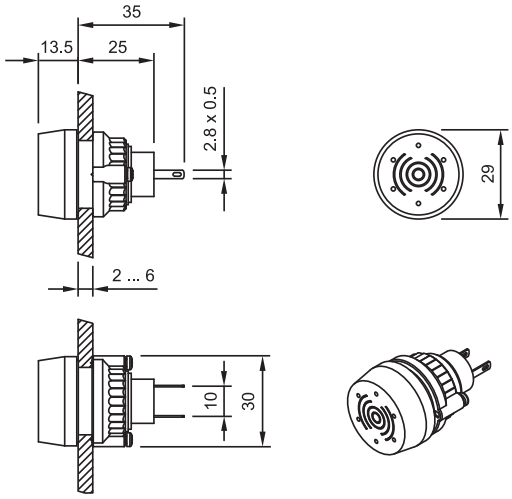

19 Illuminated pushbutton actuator, flush mounting page 35

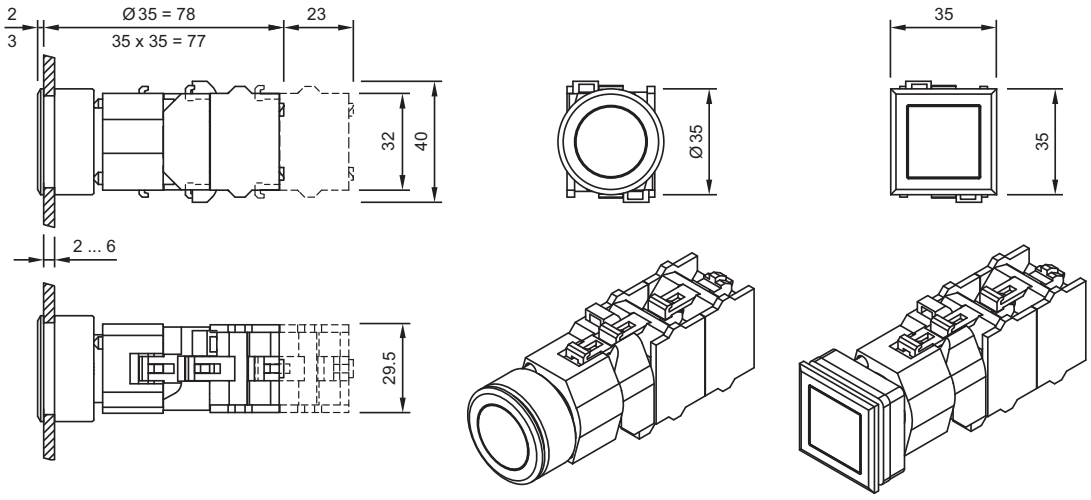

20 Indicator, flush mounting page 31

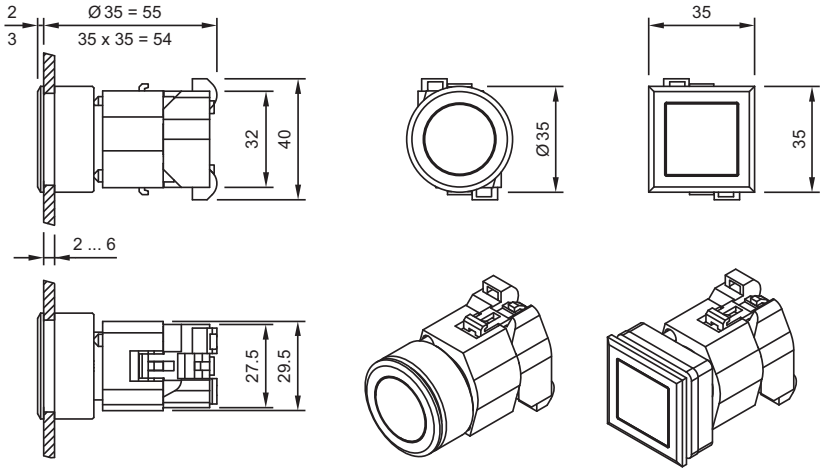

21 Flasher, flush mounting page 32

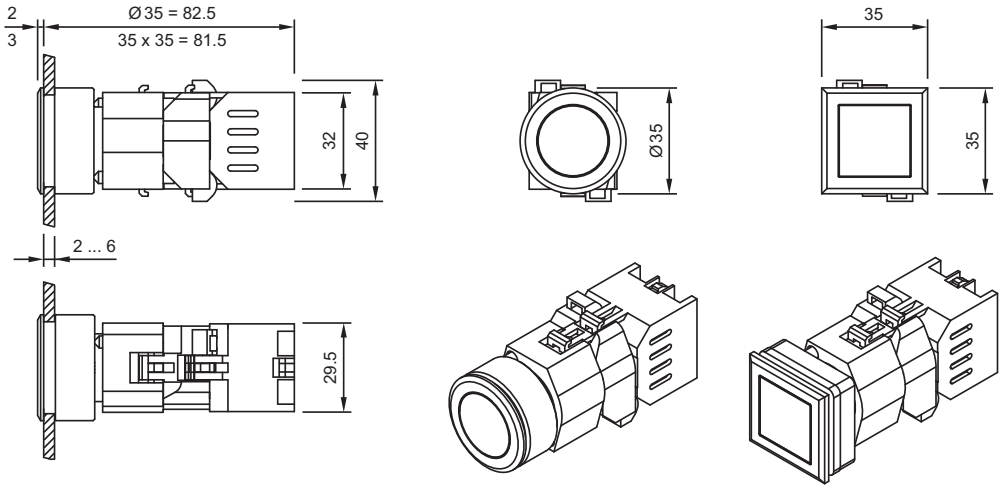

22 Pushbutton actuator, flush mounting page 33

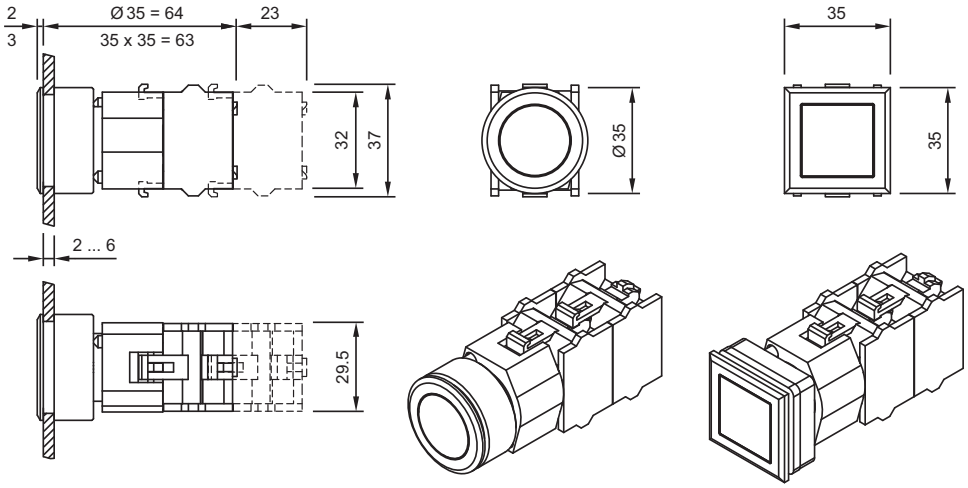

23 Selector switch actuator 2 positions, short lever, flush mounting page 39 **| Selector switch actuator 3 positions, short lever, flush mounting** page 41 **| Selector switch actuator 3 positions, long lever, flush mounting** page 42

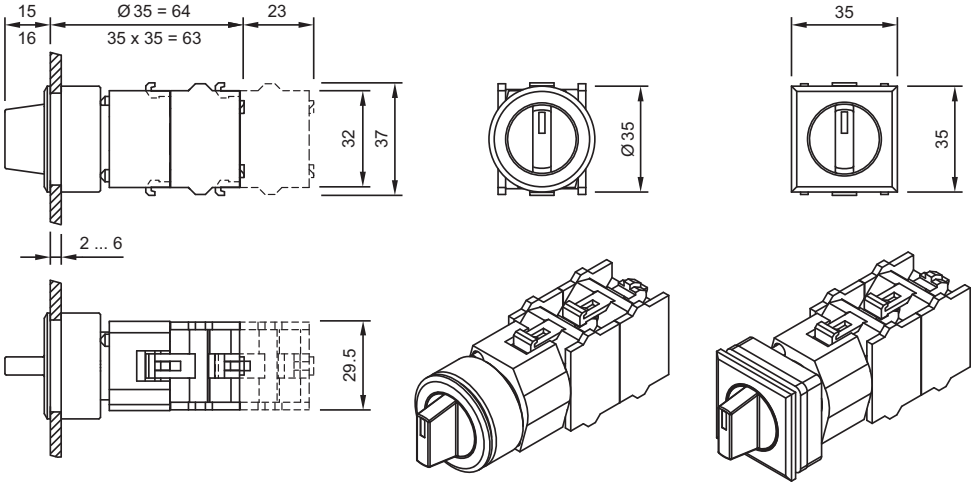

24 Emergency-stop pushbutton actuator, foolproof EN IEC 60947-5-5 page 21

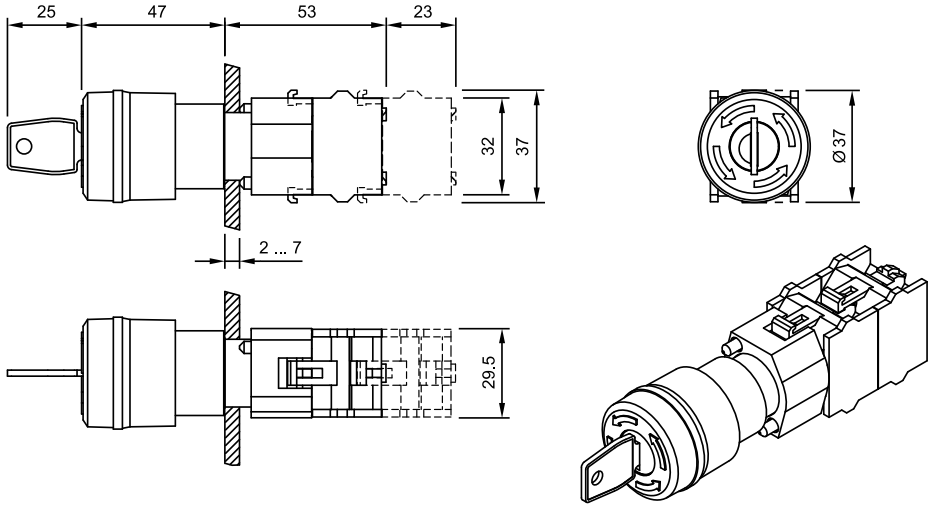

25 Keylock switch actuator 2 positions, flush mounting page 37 **| Keylock switch actuator 3 positions, flush mounting** page 38

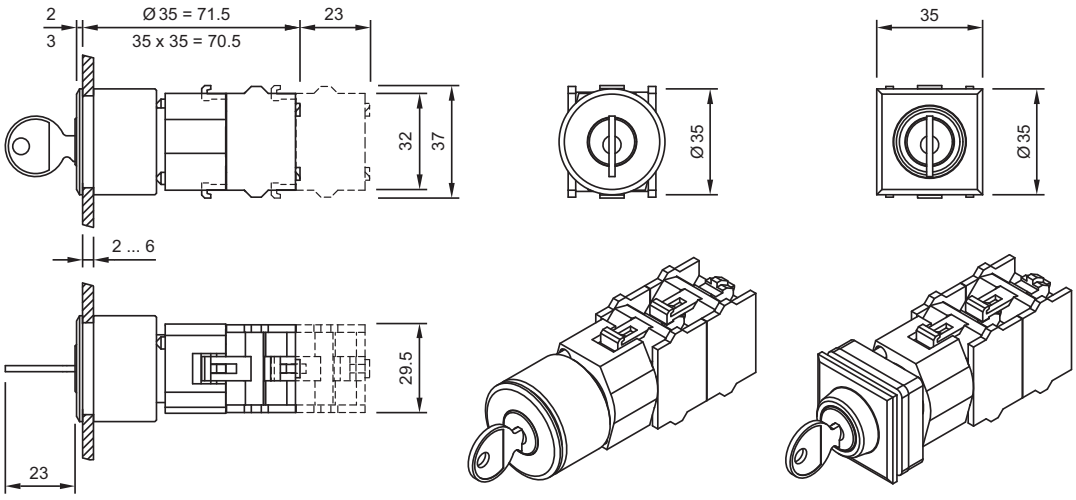

26 Stop pusbutton actuator, flush mounting page 36

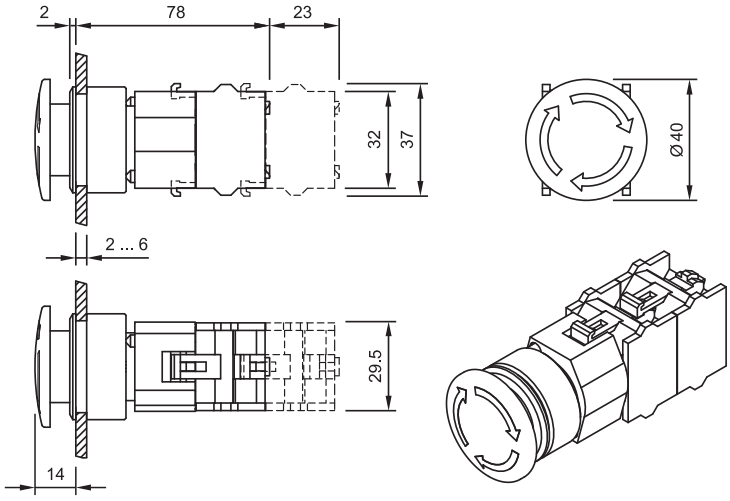

27 Mushroom-head pushbutton actuator, flush mounting page 36

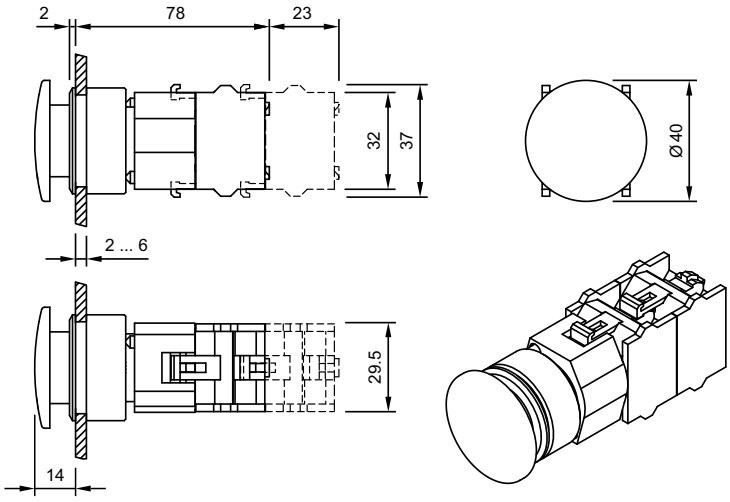

28 Switching element page 50 **| Switching element for ring cable shoe** page 51 **| Switching element for Emergency-stop pushbutton** page 52

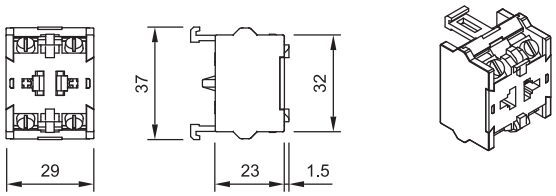

29 Switching element page 50 **| Switching element for Emergency-stop pushbutton** page 52

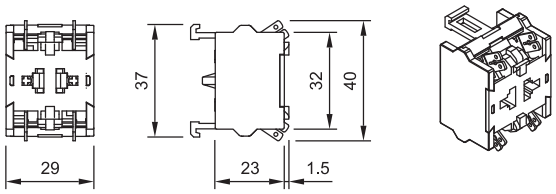

30 Switching element page 50 **| Switching element for Emergency-stop pushbutton** page 52

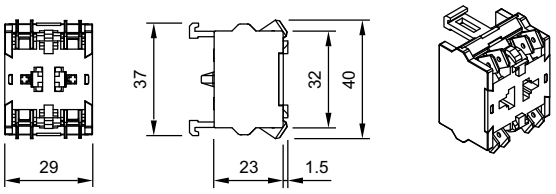

31 Flasher element page 49

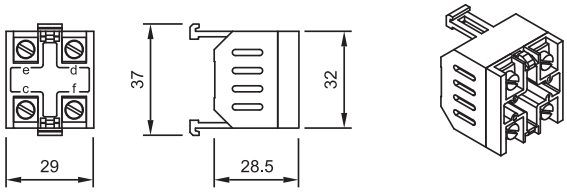

32 Lamp transformer page 57

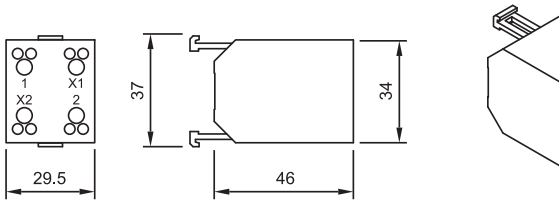

33 Diode block page 56 **| Capacitor block** page 57 **| Resistor block** page 57 **| Resistor-diode block** page 58

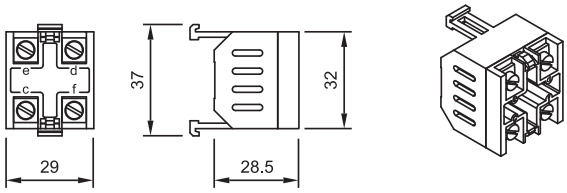

34 Terminal cover page 54

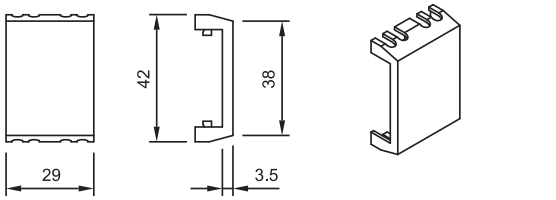

35 Mounting plate page 60

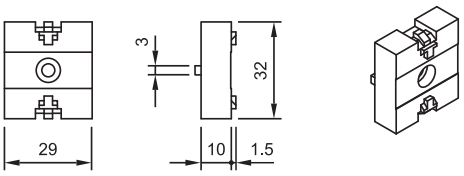

36 Snap-on base page 60

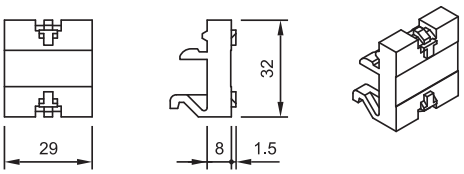

37 Snap-on base page 60

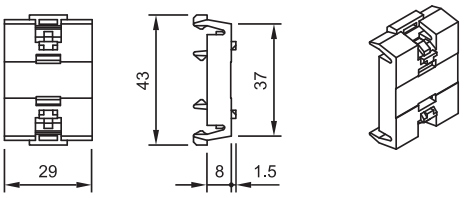

38 Lamp block page 63 **| Lamp block** page 65 **| Lamp block** page 68 **| Lamp block** page 69 **| Lamp block** page 72 **| Lamp block** page 74

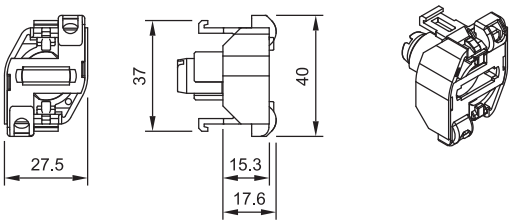

39 Lamp block page 63 **| Lamp block** page 65 **| Lamp block** page 68 **| Lamp block** page 69 **| Lamp block** page 72 **| Lamp block** page 74

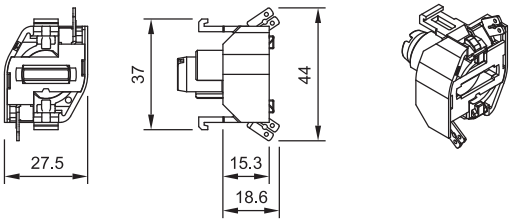

40 Lamp block page 63 **| Lamp block** page 65 **| Lamp block** page 68 **| Lamp block** page 69 **| Lamp block** page 72 **| Lamp block** page 74

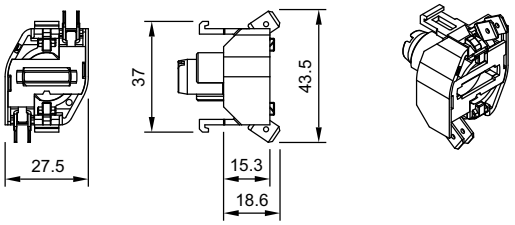

41 Blind plug page 48

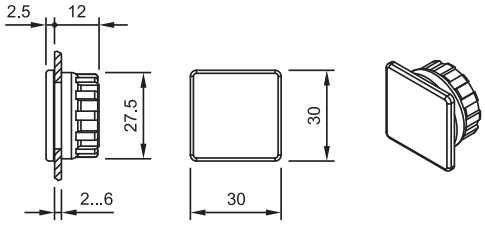

42 Blind plug page 48

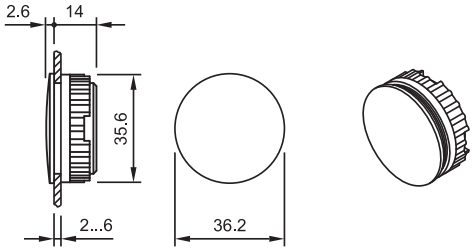

43 Blind plug page 48

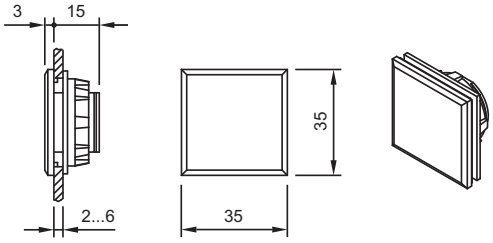

44 Blind plug page 48

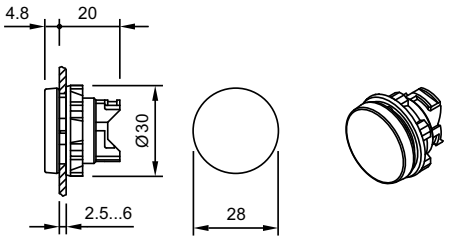

45 Bayonet flange page 63 **| Bayonet flange** page 64 **| Bayonet flange** page 67 **| Bayonet flange** page 69 **| Bayonet flange** page 72 **| Bayonet flange** page 74

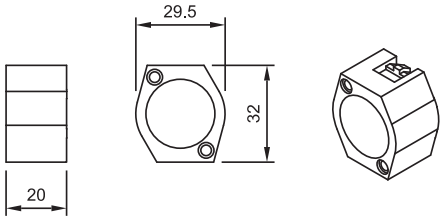

46 Bayonet flange page 63 **| Bayonet flange** page 64 **| Bayonet flange** page 67 **| Bayonet flange** page 69 **| Bayonet flange** page 72 **| Bayonet flange** page 74

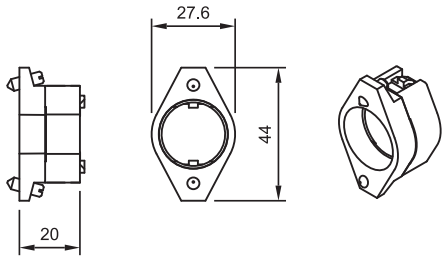

47 Protective cover page 47

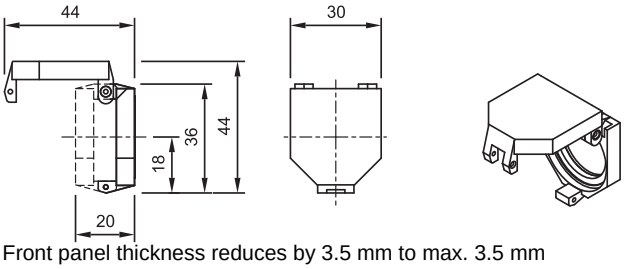

Front panel thickness reduces by 3.5 mm to max. 3.5 mm

48 Protective cover, flush mounting page 48

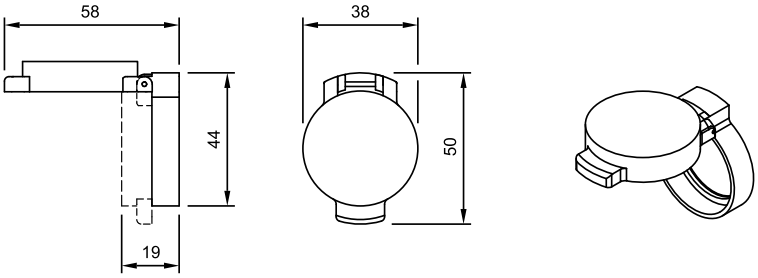

49 Protective cover page 47

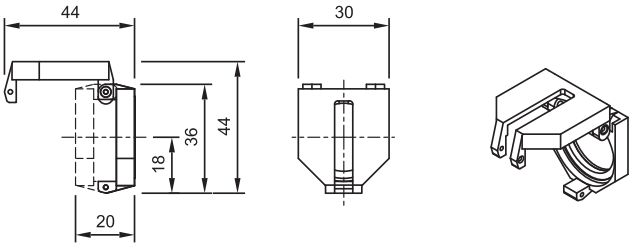

Front panel thickness reduces by 3.5 mm to max. 3.5 mm

50 Protective cover, flush mounting page 48

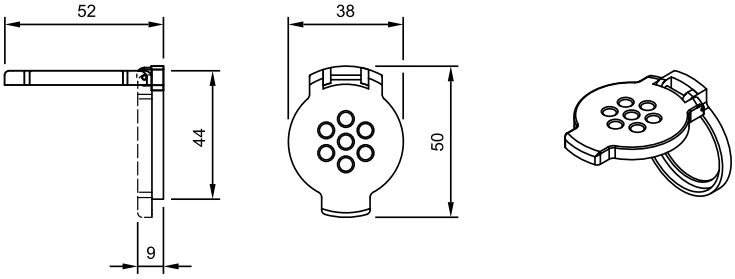

51 Protective cover, flush mounting page 48

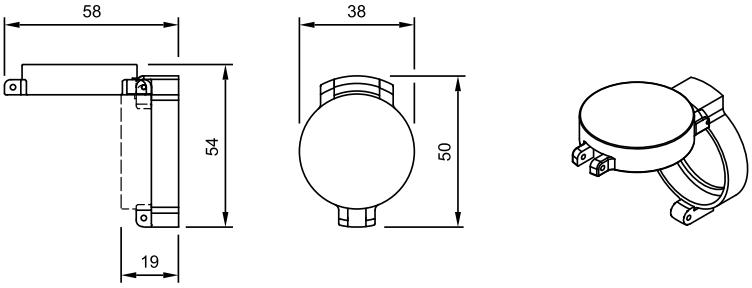

52 Protective cover, flush mounting page 48

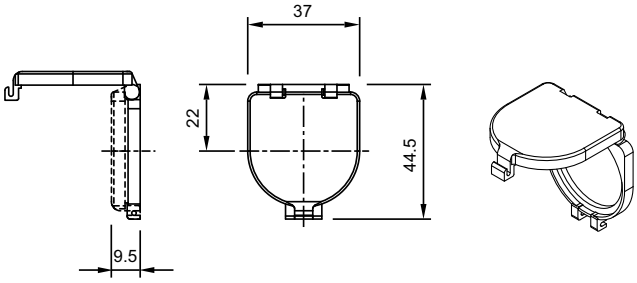

53 Legend frame page 47

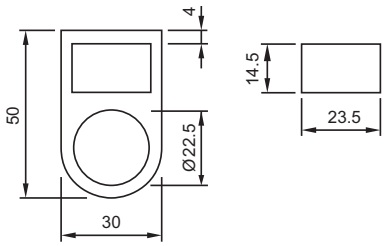

54 Key insert switch actuator 3 positions Conductor Switch, flush mounting page 45

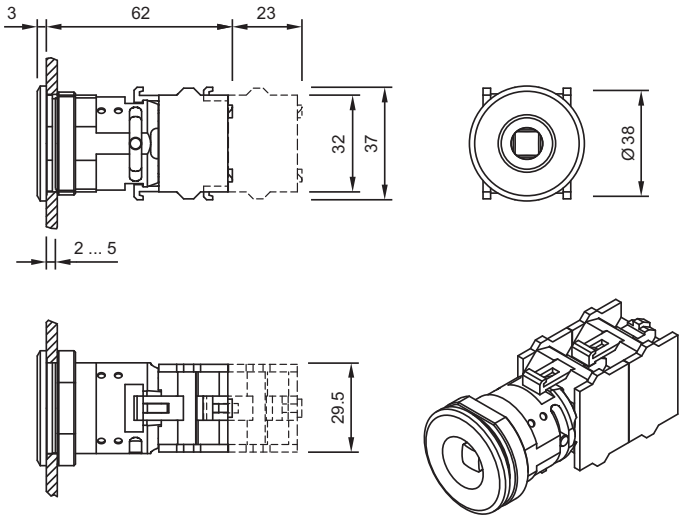

55 Legend frame page 47

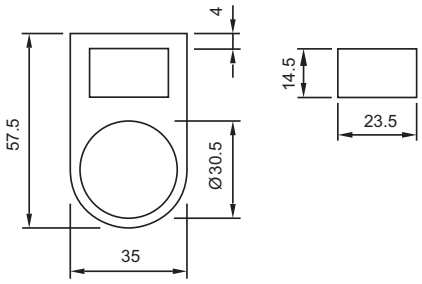

56 Emergency-stop enclosures page 59

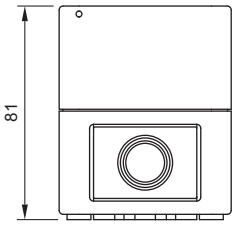

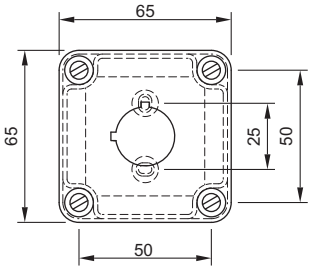

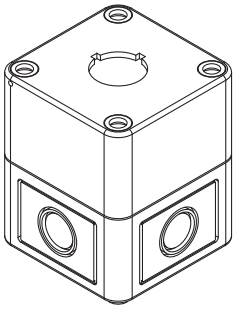

57 Emergency-stop enclosures page 59

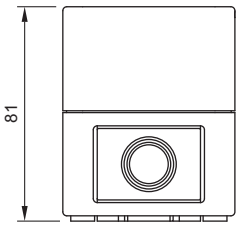

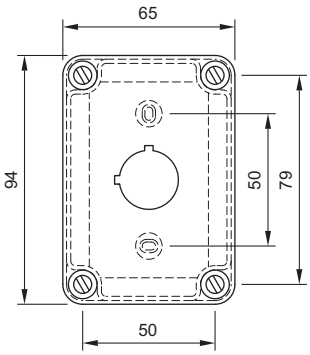

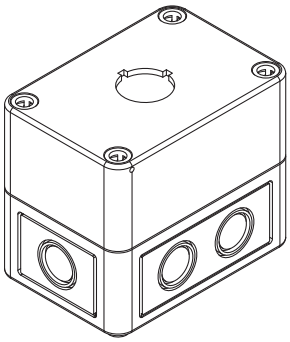

58 Emergency-stop enclosures page 59 **| Enclosure** page 61

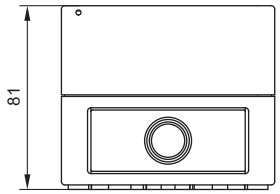

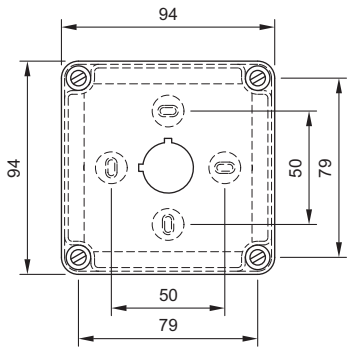

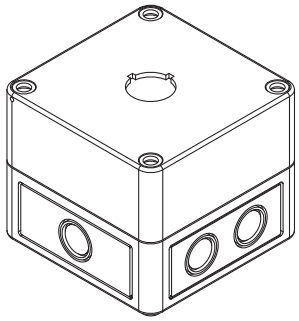

59 Enclosure page 61

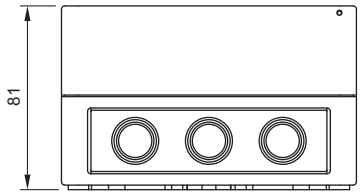

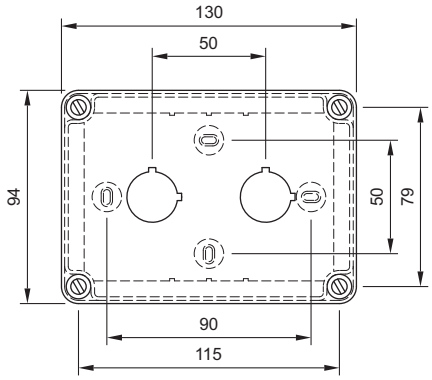

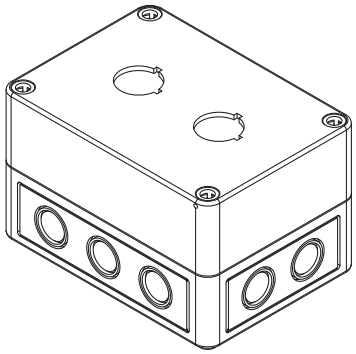

60 Enclosure page 61

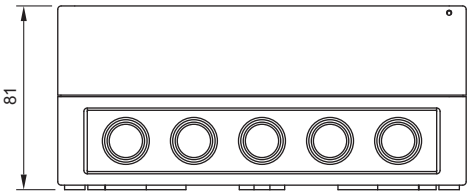

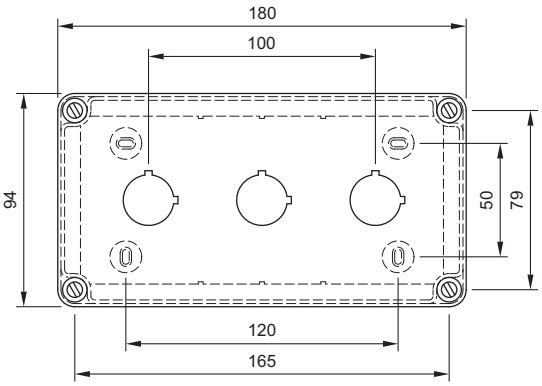

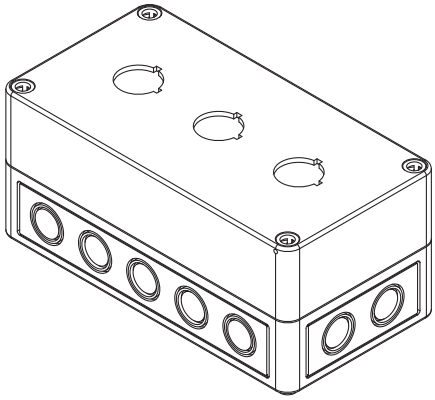

61 Enclosure page 61

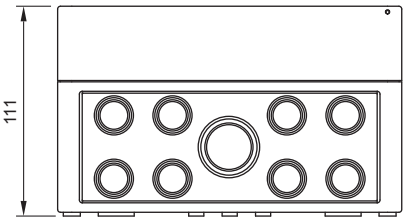

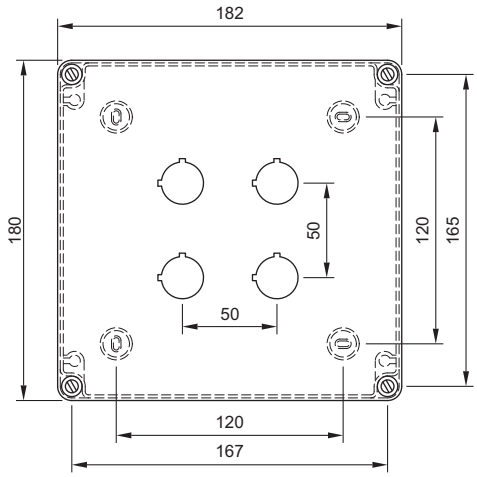

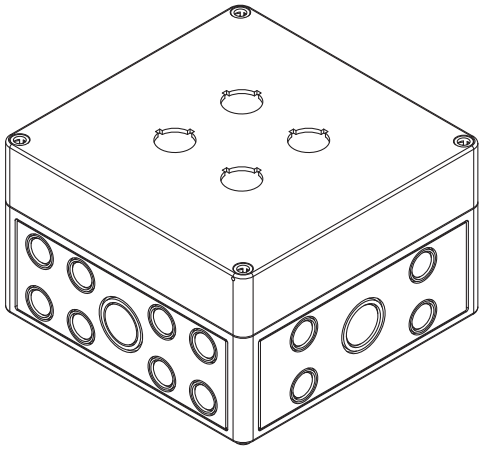

62 Enclosure page 61

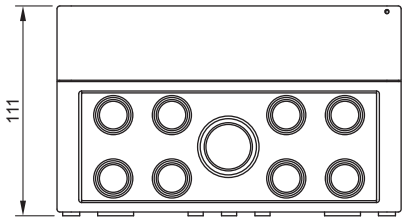

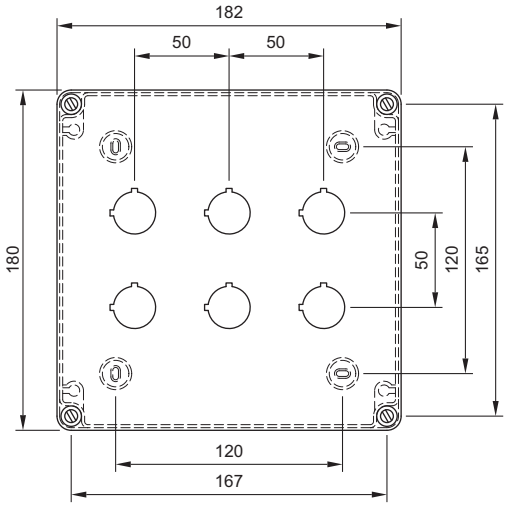

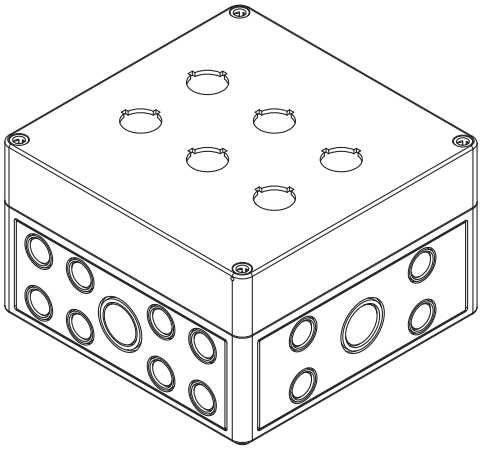

63 Buzzer, flush mounting page 32

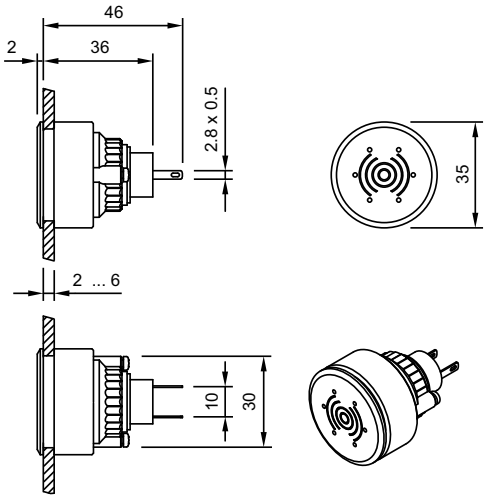

64 Rotary selector switch actuator, short lever page 30

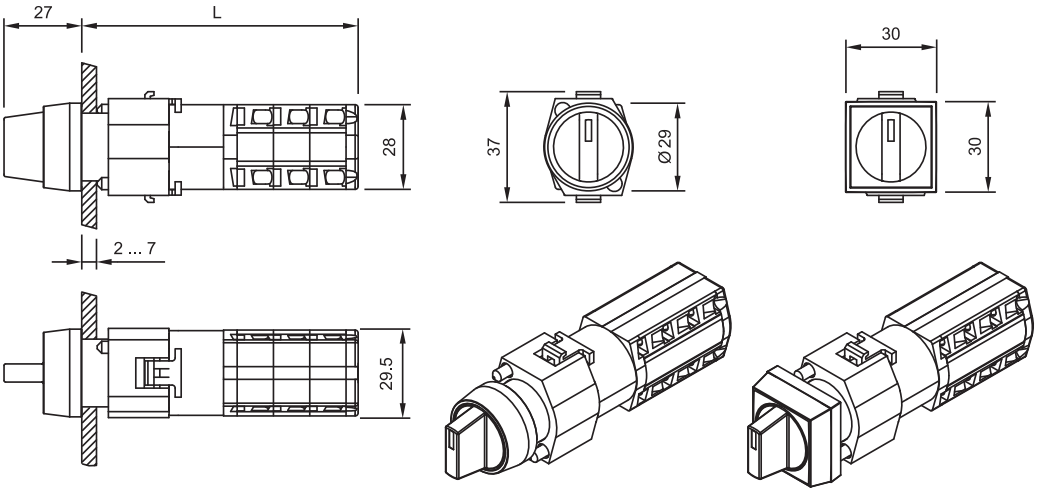

Stages	L
1	66.5
2	78.5
3	90.5
4	102.5
5	114.5
6	126.5
7	138.5
8	150.5

65 Rotary selector switch actuator, long lever page 30

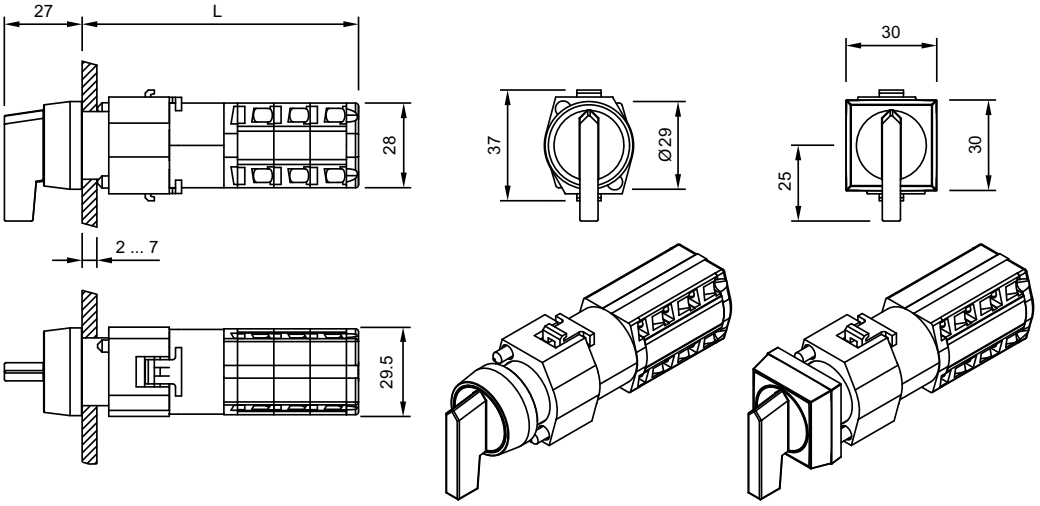

Stages	L
1	66.5
2	78.5
3	90.5
4	102.5
5	114.5
6	126.5
7	138.5
8	150.5

66 Rotary selector switch actuator, short lever, flush mounting page 43

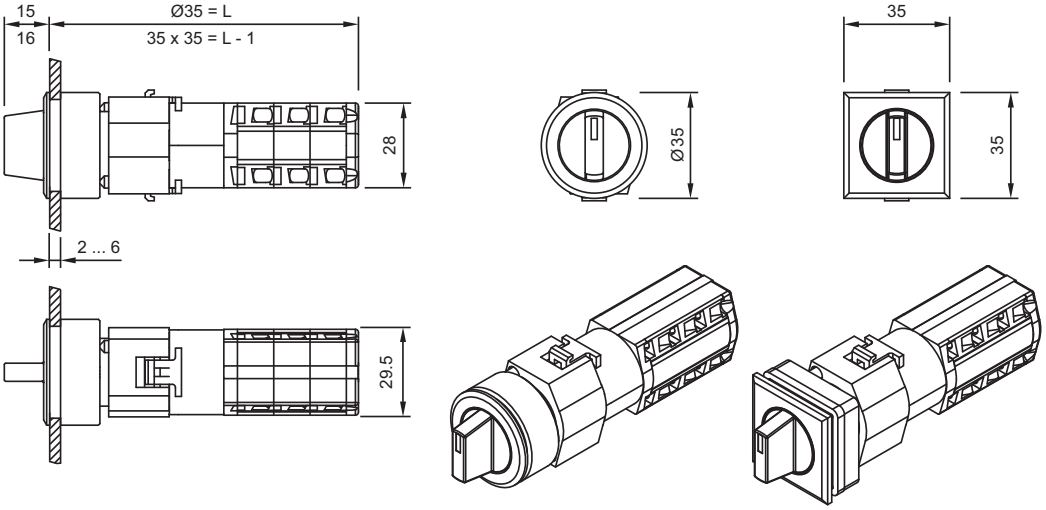

Stages	L
1	78.5
2	90.5
3	102.5
4	114.5
5	126.5
6	138.5
7	150.5
8	162.5

67 Rotary selector switch actuator, long lever, flush mounting page 43

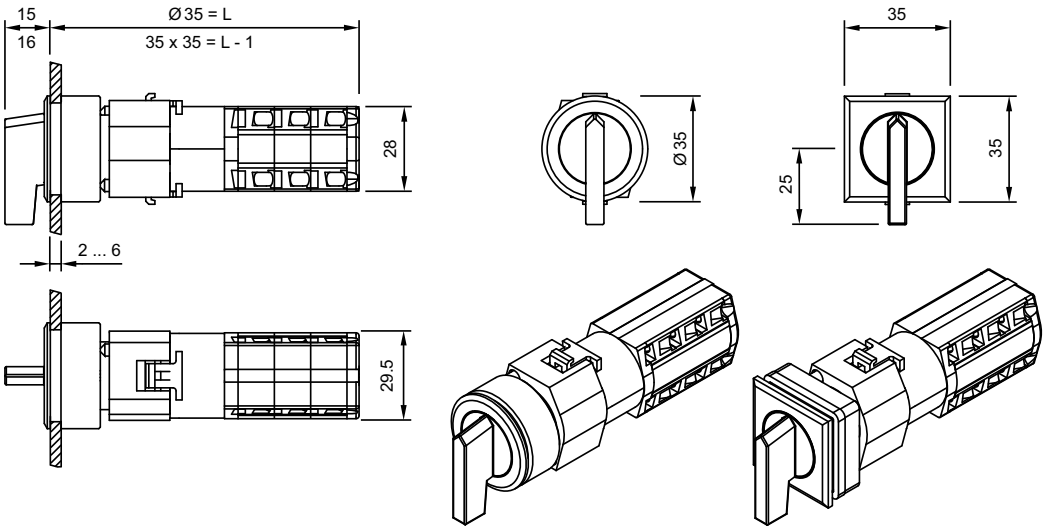

Stages	L
1	78.5
2	90.5
3	102.5
4	114.5
5	126.5
6	138.5
7	150.5
8	162.5

68 Keylock rotary switch actuator, flush mounting page 44

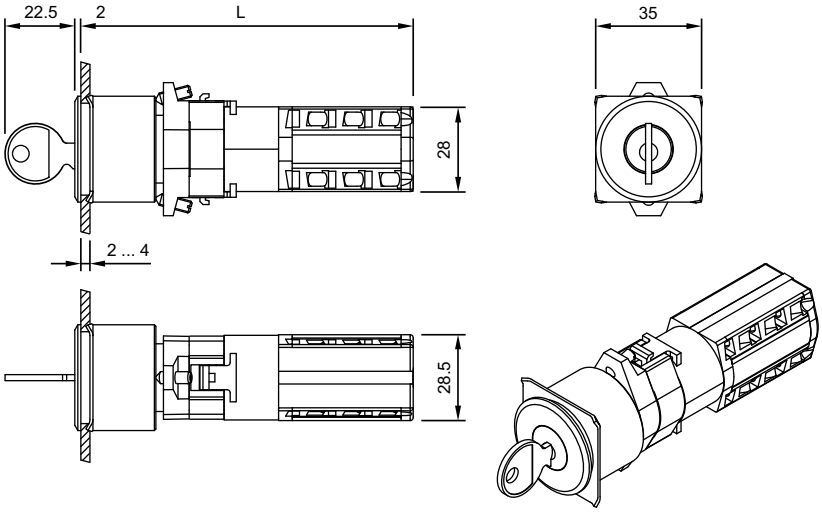

Stages	L
1	85.5
2	97.5
3	109.5
4	121.5
5	133.5
6	145.5
7	157.5
8	169.5

Circuit drawing

1 Buzzer page 17 **| Buzzer, flush mounting** page 32

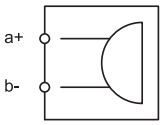

2 Diode block page 56

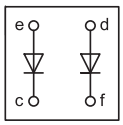

3 Pushbutton actuator page 18 **| Mushroom-head pushbutton actuator** page 23 **| Pushbutton actuator, flush mounting** page 33 **| Illuminated pushbutton actuator, flush mounting** page 35 **| Mushroom-head pushbutton actuator, flush mounting** page 36

4 Pushbutton actuator page 18 **| Mushroom-head pushbutton actuator** page 23 **| Pushbutton actuator, flush mounting** page 33 **| Illuminated pushbutton actuator, flush mounting** page 35 **| Mushroom-head pushbutton actuator, flush mounting** page 36

5 Capacitor block page 57

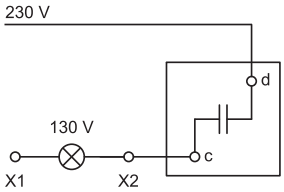

6 Indicator full-face illumination compact page 12 **| Indicator full face illumination** page 13 **| Indicator front illumination** page 14 **| Flasher full face illumination** page 15 **| Flasher front illumination** page 16 **| Indicator, flush mounting** page 31 **| Flasher, flush mounting** page 32 **| Indicator actuator for Indicator compact** page 62 **| Lamp block** page 63 **| Lamp block** page 65 **| Lamp block** page 68 **| Lamp block** page 69 **| Lamp block** page 72 **| Lamp block** page 74

7 Emergency-stop pushbutton actuator, foolproof EN IEC 60947-5-5 page 21 **| Stop pushbutton actuator** page 22 **| Stop pusbutton actuator, flush mounting** page 36

8 Switching element page 50 **| Switching element for ring cable shoe** page 51 **| Switching element for Emergency-stop pushbutton** page 52

9 Switching element page 50 **| Switching element for ring cable shoe** page 51 **| Switching element for Emergency-stop pushbutton** page 52

10 Lamp transformer page 57

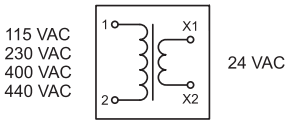

11 Resistor block page 57

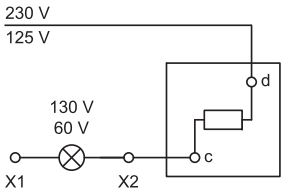

12 Resistor-diode block page 58

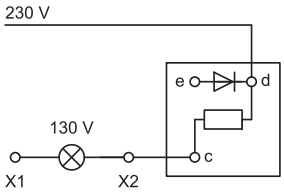

13 Flasher element page 49

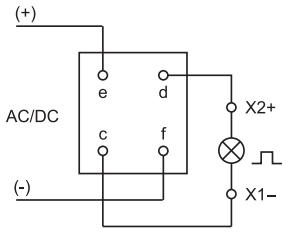

14 Rotary selector switching element 30° page 53

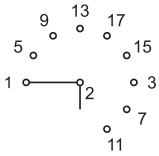

15 Rotary selector switching element 30° page 53

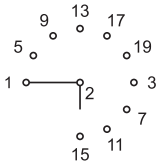

16 Rotary selector switching element 30° page 53

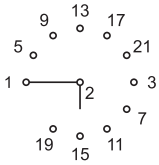

17 Rotary selector switching element 30° page 53

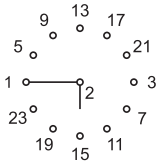

18 Rotary selector switching element 45° page 53

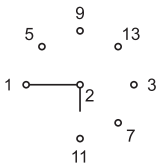

19 Rotary selector switching element 45° page 53

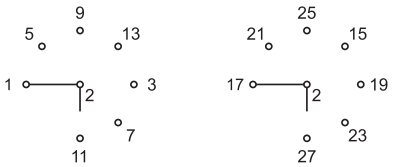

20 Rotary selector switching element 45° page 53

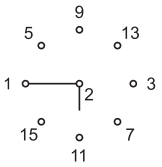

21 Rotary selector switching element 45° page 53

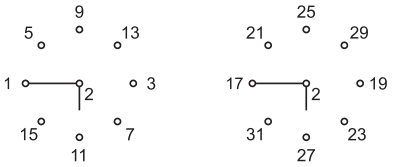

22 Rotary selector switching element 60° page 54

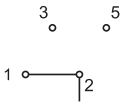

23 Rotary selector switching element 60° page 54

24 Rotary selector switching element 60° page 54

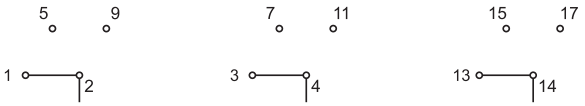

25 Rotary selector switching element 60° page 54

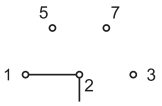

26 Rotary selector switching element 60° page 54

27 Rotary selector switching element 60° page 54

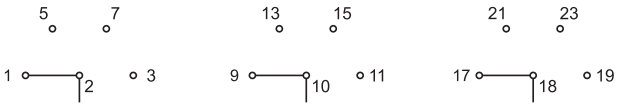

28 Rotary selector switching element 60° page 54

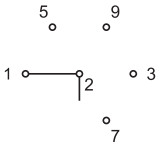

29 Rotary selector switching element 60° page 54

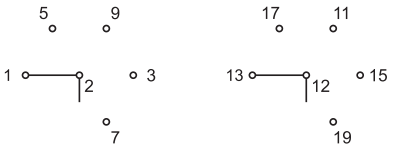

30 Rotary selector switching element 60° page 54

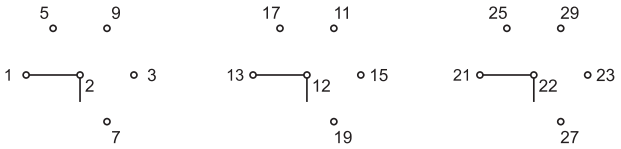

31 Rotary selector switching element 60° page 54

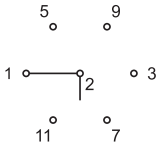

32 Rotary selector switching element 60° page 54

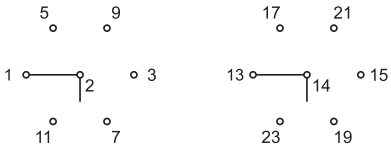

33 Rotary selector switching element 60° page 54

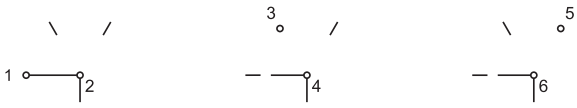

34 Rotary selector switching element 60° page 54

35 Illuminated pushbutton actuator page 20 **| Mushroom-head pushbutton actuator illuminated** page 24 **| Illuminated pushbutton actuator, flush mounting** page 35

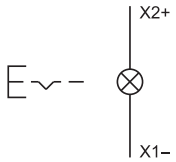

36 Selector switch actuator 3 positions, short lever page 28 **| Selector switch actuator 3 positions, short lever, flush mounting** page 41 **| Selector switch actuator 3 positions, long lever, flush mounting** page 42

37 Selector switch actuator 3 positions, short lever page 28 **| Selector switch actuator 3 positions, long lever long** page 29 **| Selector switch actuator 3 positions, short lever, flush mounting** page 41 **| Selector switch actuator 3 positions, long lever, flush mounting** page 42

38 Selector switch actuator 3 positions, short lever page 28 **| Selector switch actuator 3 positions, long lever long** page 29 **| Selector switch actuator 3 positions, short lever, flush mounting** page 41 **| Selector switch actuator 3 positions, long lever, flush mounting** page 42

39 Selector switch actuator 2 positions, short lever page 27 **| Selector switch actuator 2 positions, long lever** page 27 **| Selector switch actuator 2 positions, short lever, flush mounting** page 39 **| Selector switch actuator 2 positions, long lever, flush mounting** page 40

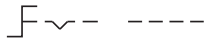

40 Selector switch actuator 2 positions, short lever page 27 **| Selector switch actuator 2 positions, long lever** page 27 **| Selector switch actuator 2 positions, short lever, flush mounting** page 39 **| Selector switch actuator 2 positions, long lever, flush mounting** page 40

41 Selector switch actuator 3 positions, short lever page 28 **| Selector switch actuator 3 positions, long lever long** page 29 **| Selector switch actuator 3 positions, short lever, flush mounting** page 41 **| Selector switch actuator 3 positions, long lever, flush mounting** page 42

42 Selector switch actuator 3 positions, short lever page 28 **| Selector switch actuator 3 positions, long lever long** page 29 **| Selector switch actuator 3 positions, short lever, flush mounting** page 41 **| Selector switch actuator 3 positions, long lever, flush mounting** page 42

43 Illuminated pushbutton actuator page 20 **| Mushroom-head pushbutton actuator illuminated** page 24 **| Illuminated pushbutton actuator, flush mounting** page 35

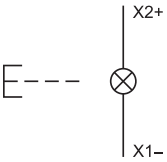

44 Keylock switch actuator 3 positions page 26 **| Keylock switch actuator 3 positions, flush mounting** page 38

45 Keylock switch actuator 3 positions page 26 **| Keylock switch actuator 3 positions, flush mounting** page 38

46 Keylock switch actuator 2 positions page 25 **| Keylock switch actuator 2 positions, flush mounting** page 37

47 Keylock switch actuator 2 positions page 25 **| Keylock switch actuator 2 positions, flush mounting** page 37

48 Keylock switch actuator 3 positions page 26 **| Keylock switch actuator 3 positions, flush mounting** page 38

49 Keylock switch actuator 3 positions page 26 **| Keylock switch actuator 3 positions, flush mounting** page 38

50 Switching element page 50 **| Switching element for ring cable shoe** page 51 **| Switching element for Emergency-stop pushbutton** page 52

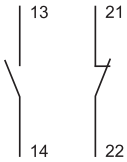

51 Switching element page 50 **| Switching element for ring cable shoe** page 51 **| Switching element for Emergency-stop pushbutton** page 52

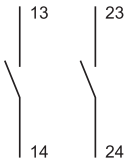

52 Switching element page 50 **| Switching element for ring cable shoe** page 51 **| Switching element for Emergency-stop pushbutton** page 52

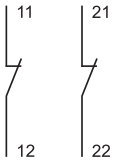

53 Indicator full-face illumination compact page 12

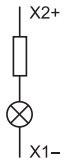

Index from Typ-Nr.

Typ-Nr.	Page
02-912.1	58
02-912.2	58
02-912.3	58
02-912.4	58
10-1406.1369	55
10-1409.1329	55
10-1412.1279	55
10-1416.1289	55
10-1419.1249	55
10-1420.1219	55
10-1422.1179	55
10-1424.1179	55
10-2506.1082	56
10-2506.1084	56
10-2506.1085	56
10-2506.1086	56
10-2506.1089	56
10-2509.1142	56
10-2509.1144	56
10-2509.1145	56
10-2509.1146	56
10-2509.1149	56
10-2512.1142	56
10-2512.1144	56
10-2512.1145	56
10-2512.1146	56
10-2512.1149	56
10-2513.1142	56
10-2513.1144	56
10-2513.1145	56
10-2513.1146	56
10-2513.1149	56
10-2519.1052	56
10-2519.1054	56
10-2519.1055	56
10-2519.1056	56
10-2519.1059	56
10-2H24.2052	56
10-2H24.2054	56
10-2H24.2055	56
10-2H24.2056	56
10-2H24.2059	56
10-2H25.2042	56
10-2H25.2044	56
10-2H25.2045	56
10-2H25.2046	56
10-2H25.2049	56
14-810.002	17
14-810.902	17
14-810.910	32
14-810.918	32
61-9481.6	59
61-9481.6	61
700.004.0	61
700.005.0	61
700.006.0	60
704.000.2	13
704.000.2	13
704.000.2	15
704.000.2	15
704.000.4	13
704.000.4	13
704.000.4	15
704.000.4	15
704.000.5	13
704.000.5	13
704.000.5	15
704.000.5	15
704.000.6	13
704.000.6	13
704.000.6	15
704.000.6	15
704.000.7	13
704.000.7	13
704.000.7	15
704.000.7	15
704.001.2	13
704.001.2	15
704.001.4	13
704.001.4	15
704.001.5	13
704.001.5	15
704.001.6	13
704.001.6	15
704.001.7	13
704.001.7	15
704.002.2	14
704.002.2	16
704.002.4	14
704.002.4	16
704.002.5	14
704.002.5	16
704.002.6	14
704.002.6	16
704.002.7	14
704.002.7	16
704.003.2	14
704.003.2	16
704.003.4	14
704.003.4	16
704.003.5	14
704.003.5	16
704.003.6	14
704.003.6	16
704.003.7	14
704.003.7	16
704.006.2	14
704.006.2	16
704.006.218	31
704.006.218	32
704.006.4	14
704.006.4	16
704.006.418	31
704.006.418	32
704.006.5	14
704.006.5	16
704.006.518	31
704.006.518	32
704.006.6	14
704.006.6	16
704.006.618	31
704.006.618	32
704.006.7	14
704.006.7	16
704.006.718	31
704.006.718	32
704.007.2	14
704.007.2	16
704.007.4	14
704.007.4	16
704.007.5	14
704.007.5	16
704.007.6	14
704.007.6	16
704.007.7	14
704.007.7	16
704.009.0	18
704.009.2	18
704.009.4	18
704.009.5	18
704.009.6	18
704.009.7	18
704.010.0	18
704.010.2	18
704.010.4	18
704.010.5	18
704.010.6	18
704.010.7	18
704.011.0	19
704.011.018	34
704.011.2	19
704.011.218	34
704.011.4	19
704.011.418	34
704.011.5	19
704.011.518	34
704.011.6	19
704.011.618	34
704.011.8	19
704.011.818	34
704.012.0	19
704.012.018	34
704.012.2	19
704.012.218	34
704.012.4	19
704.012.418	34
704.012.5	19
704.012.518	34
704.012.6	19
704.012.618	34
704.012.7	19
704.012.718	34
704.013.0	19
704.013.2	19
704.013.4	19
704.013.5	19
704.013.6	19
704.013.7	19
704.020.2	12
704.020.4	12
704.020.5	12
704.020.6	12
704.020.7	12
704.021.2	12
704.021.4	12
704.021.5	12
704.021.6	12
704.021.7	12
704.022.2	12

Index from Typ-Nr.

Typ-Nr.	Page
704.022.4	12
704.022.5	12
704.022.6	12
704.022.7	12
704.024.2	12
704.024.4	12
704.024.5	12
704.024.6	12
704.024.7	12
704.029.2	20
704.029.4	20
704.029.5	20
704.029.6	20
704.029.7	20
704.030.2	20
704.030.4	20
704.030.5	20
704.030.6	20
704.030.7	20
704.032.2	20
704.032.218	35
704.032.4	20
704.032.418	35
704.032.5	20
704.032.518	35
704.032.6	20
704.032.618	35
704.032.7	20
704.032.718	35
704.033.2	20
704.033.4	20
704.033.5	20
704.033.6	20
704.033.7	20
704.039.0	18
704.039.2	18
704.039.4	18
704.039.5	18
704.039.6	18
704.039.7	18
704.040.0	18
704.040.2	18
704.040.4	18
704.040.5	18
704.040.6	18
704.040.7	18
704.041.0	18
704.041.018	33
704.041.2	18
704.041.218	33
704.041.4	18
704.041.418	33
704.041.5	18
704.041.518	33
704.041.6	18
704.041.618	33
704.041.8	18
704.041.818	33
704.042.0	18
704.042.018	33
704.042.2	18
704.042.218	33
704.042.4	18
704.042.418	33
704.042.5	18
704.042.518	33
704.042.6	18
704.042.618	33
704.042.7	18
704.042.718	33
704.043.0	18
704.043.2	18
704.043.4	18
704.043.5	18
704.043.6	18
704.043.7	18
704.059.2	20
704.059.4	20
704.059.5	20
704.059.6	20
704.059.7	20
704.060.2	20
704.060.4	20
704.060.5	20
704.060.6	20
704.060.7	20
704.062.2	20
704.062.218	35
704.062.4	20
704.062.418	35
704.062.5	20
704.062.518	35
704.062.6	20
704.062.618	35
704.062.7	20
704.062.718	35
704.063.2	20
704.063.4	20
704.063.5	20
704.063.6	20
704.063.7	20
704.064.2	21
704.066.2	21
704.070.0	23
704.070.2	23
704.070.4	23
704.070.5	23
704.071.0	23
704.071.2	23
704.071.210	36
704.071.218	36
704.071.4	23
704.071.410	36
704.071.418	36
704.071.5	23
704.072.0	23
704.072.2	23
704.072.4	23
704.072.5	23
704.073.0	23
704.073.2	23
704.073.210	36
704.073.4	23
704.073.5	23
704.074.2	22
704.074.210	36
704.074.3	22
704.075.2	22
704.075.218	36
704.075.3	22
704.075.310	36
704.075.318	36
704.076.0	22
704.078.0	22
704.084.2	24
704.084.4	24
704.084.5	24
704.084.6	24
704.084.7	24
704.086.2	24
704.086.4	24
704.086.5	24
704.086.6	24
704.086.7	24
704.092.0	29
704.093.0	29
704.093.010	42
704.093.018	42
704.093.0x28	45
704.094.0	29
704.095.0	29
704.095.010	42
704.095.018	42
704.095.0T28	45
704.095.0x28	45
704.096.0	29
704.097.0	29
704.097.010	42
704.097.018	42
704.097.0x28	45
704.098.0	29
704.099.0	29
704.099.010	42
704.099.018	42
704.099.0x28	45
704.100.0	27
704.101.0	27
704.101.010	40
704.101.018	40
704.101.018KN	43
704.101.0KN	30
704.101.0x28	44
704.101.110KN	43
704.101.118KN	43
704.101.1KN	30
704.102.0	27
704.103.0	27
704.103.018	40
704.103.0x28	44
704.113.0	26
704.113.018	38
704.114.0	26
704.114.018	38
704.115.0	26
704.115.018	38
704.116.0	26
704.116.018	38
704.117.0	26
704.117.018	38

Index from Typ-Nr.

Typ-Nr.	Page
704.118.0	26
704.118.018	38
704.120.0	25
704.120.018	37
704.121.0	25
704.121.018	37
704.122.0	25
704.122.018	37
704.123.0	25
704.123.018	37
704.123.018KN	44
704.123.118KN	44
704.124.0	26
704.124.018	38
704.151.XXX	46
704.152.XXX	46
704.153.XXX	46
704.154.XXX	46
704.155.XXX	46
704.199.2	13
704.199.2	15
704.199.4	13
704.199.4	15
704.199.5	13
704.199.5	15
704.199.6	13
704.199.6	15
704.199.7	13
704.199.7	15
704.200.2	13
704.200.2	15
704.200.4	13
704.200.4	15
704.200.5	13
704.200.5	15
704.200.6	13
704.200.6	15
704.200.7	13
704.200.7	15
704.202.2	14
704.202.2	16
704.202.208	31
704.202.208	32
704.202.4	14
704.202.4	16
704.202.408	31
704.202.408	32
704.202.5	14
704.202.5	16
704.202.508	31
704.202.508	32
704.202.6	14
704.202.6	16
704.202.608	31
704.202.608	32
704.202.7	14
704.202.7	16
704.202.708	31
704.202.708	32
704.203.2	14
704.203.2	16
704.203.4	14
704.203.4	16
704.203.5	14
704.203.5	16
704.203.6	14
704.203.6	16
704.203.7	14
704.203.7	16
704.206.2	14
704.206.2	16
704.206.200	31
704.206.200	32
704.206.4	14
704.206.4	16
704.206.400	31
704.206.400	32
704.206.5	14
704.206.5	16
704.206.500	31
704.206.500	32
704.206.6	14
704.206.6	16
704.206.600	31
704.206.600	32
704.206.7	14
704.206.7	16
704.206.700	31
704.206.700	32
704.207.2	14
704.207.2	16
704.207.4	14
704.207.4	16
704.207.5	14
704.207.5	16
704.207.6	14
704.207.6	16
704.207.7	14
704.207.7	16
704.209.0	18
704.209.000	33
704.209.2	18
704.209.200	33
704.209.4	18
704.209.400	33
704.209.5	18
704.209.500	33
704.209.6	18
704.209.600	33
704.209.7	18
704.209.700	33
704.210.0	18
704.210.008	33
704.210.2	18
704.210.208	33
704.210.4	18
704.210.408	33
704.210.5	18
704.210.508	33
704.210.6	18
704.210.608	33
704.210.7	18
704.210.708	33
704.229.2	20
704.229.200	35
704.229.4	20
704.229.400	35
704.229.5	20
704.229.500	35
704.229.6	20
704.229.600	35
704.229.7	20
704.229.700	35
704.230.2	20
704.230.208	35
704.230.4	20
704.230.408	35
704.230.5	20
704.230.508	35
704.230.6	20
704.230.608	35
704.230.7	20
704.230.708	35
704.239.0	18
704.239.000	33
704.239.2	18
704.239.200	33
704.239.4	18
704.239.400	33
704.239.5	18
704.239.500	33
704.239.6	18
704.239.600	33
704.239.7	18
704.239.700	33
704.240.0	18
704.240.008	33
704.240.2	18
704.240.208	33
704.240.4	18
704.240.408	33
704.240.5	18
704.240.508	33
704.240.6	18
704.240.608	33
704.240.7	18
704.240.708	33
704.259.2	20
704.259.200	35
704.259.4	20
704.259.400	35
704.259.5	20
704.259.500	35
704.259.6	20
704.259.600	35
704.259.7	20
704.259.700	35
704.260.2	20
704.260.208	35
704.260.4	20
704.260.408	35
704.260.5	20
704.260.508	35
704.260.6	20
704.260.608	35
704.260.7	20
704.260.708	35
704.292.0	29
704.292.000	42

Index from Typ-Nr.

Typ-Nr.	Page
704.292.008	42
704.294.0	29
704.294.000	42
704.294.008	42
704.296.0	29
704.296.000	42
704.296.008	42
704.298.0	29
704.298.000	42
704.298.008	42
704.300.0	27
704.300.000	40
704.300.008	40
704.300.100KN	43
704.300.108KN	43
704.300.1KN	30
704.302.0	27
704.302.000	40
704.302.008	40
704.333.0	26
704.333.000	38
704.333.008	38
704.334.0	26
704.334.000	38
704.334.008	38
704.335.0	26
704.335.000	38
704.335.008	38
704.336.0	26
704.336.000	38
704.336.008	38
704.337.0	26
704.337.000	38
704.337.008	38
704.338.0	26
704.338.000	38
704.338.008	38
704.340.0	25
704.340.000	37
704.340.008	37
704.341.0	25
704.341.000	37
704.341.008	37
704.342.0	25
704.342.000	37
704.342.008	37
704.343.0	25
704.343.000	37
704.343.008	37
704.344.0	26
704.344.000	38
704.344.008	38
704.402.0	28
704.403.0	28
704.403.010	41
704.403.018	41
704.404.0	28
704.405.0	28
704.405.010	41
704.405.018	41
704.406.0	28
704.407.0	28
704.407.010	41

Typ-Nr.	Page
704.407.018	41
704.408.0	28
704.409.0	28
704.409.010	41
704.409.018	41
704.410.0	27
704.411.0	27
704.411.010KN	43
704.411.018	39
704.411.110KN	43
704.411.118KN	43
704.411.1KN	30
704.412.0	27
704.413.0	27
704.413.010	39
704.413.018	39
704.502.0	28
704.502.000	41
704.502.008	41
704.504.0	28
704.504.000	41
704.504.008	41
704.506.0	28
704.506.000	41
704.506.008	41
704.508.0	28
704.508.000	41
704.508.008	41
704.510.0	27
704.510.000	39
704.510.008	39
704.510.100KN	43
704.510.108KN	43
704.510.1KN	30
704.512.0	27
704.512.000	39
704.512.008	39
704.600.0	67
704.600.0	71
704.600.1	67
704.600.1	71
704.600.1A	67
704.600.1A	71
704.600.2	67
704.600.2	72
704.600.3	67
704.600.3	72
704.600.5/A	67
704.600.5/A	72
704.600.6	67
704.600.6	71
704.600.7	67
704.600.7	71
704.600.9	67
704.600.9	71
704.601.0	70
704.601.01	71
704.601.2	70
704.601.21	71
704.601.4	70
704.601.41	71
704.601.5	70
704.601.51	71

Typ-Nr.	Page
704.601.6	70
704.601.61	71
704.601.8	70
704.601.81	71
704.601.9	70
704.601.91	71
704.602.0	65
704.602.0	70
704.602.2	65
704.602.2	70
704.602.4	65
704.602.4	70
704.602.5	65
704.602.5	70
704.602.6	65
704.602.6	70
704.602.7	65
704.602.7	70
704.603.2	62
704.603.2	63
704.603.4	62
704.603.4	63
704.603.5	62
704.603.5	63
704.603.6	62
704.603.6	63
704.603.7	62
704.603.7	63
704.608.7	62
704.608.7	63
704.608.9	62
704.608.9	63
704.609.7	65
704.609.7	70
704.609.9	65
704.609.9	70
704.610.7	66
704.610.9	66
704.611.2	66
704.611.4	66
704.611.5	66
704.611.7	66
704.630.1	62
704.631.1	70
704.632.1	70
704.633.1	65
704.633.1	65
704.642.0	62
704.642.1	62
704.642.2	62
704.701.0	69
704.701.0	74
704.701.4	69
704.701.4	74
704.701.6	69
704.701.6	74
704.702.0	73
704.702.2	68
704.702.2	68
704.702.2	73
704.702.4	68
704.702.4	68
704.702.4	73

Index from Typ-Nr.

Typ-Nr.	Page
704.702.5	68
704.702.5	68
704.702.5	73
704.702.6	68
704.702.6	68
704.702.6	73
704.702.7	68
704.702.7	68
704.702.7	73
704.702.9	73
704.703.2	64
704.703.4	64
704.703.5	64
704.703.6	64
704.703.7	64
704.706.7	64
704.707.7	69
704.707.7	73
704.708.7	64
704.708.9	64
704.709.7	68
704.709.7	73
704.709.9	68
704.709.9	73
704.730.0	64
704.730.1	64
704.731.0	73
704.731.1	73
704.732.0	73
704.732.1	73
704.733.0	68
704.733.1	68
704.741.0	73
704.741.8	73
704.742.0	73
704.742.8	73
704.743.0	68
704.743.8	68
704.8A230	54
704.8A231	54
704.8A232	54
704.8A233	54
704.8A234	53
704.8A235	53
704.8A236	53
704.8A237	53
704.8A238	53
704.8A239	53
704.8A250	54
704.8A251	54
704.8A252	54
704.8A253	54
704.8A254	53
704.8A255	53
704.8A270	54
704.8A271	54
704.8A272	54
704.8A639	53
704.8A730	54
704.8A731	54
704.900.1	50
704.900.1B	51
704.900.2	50

Typ-Nr.	Page
704.900.2B	51
704.900.3	51
704.900.3B	51
704.900.4	50
704.900.4B	51
704.900.5	50
704.900.5B	51
704.901.1	50
704.901.1/D	50
704.901.2	50
704.901.2/D	50
704.901.3	51
704.901.3/D	51
704.901.4	50
704.901.4/D	50
704.901.5	50
704.901.5/D	50
704.902.1	50
704.902.2	50
704.902.3	51
704.902.4	50
704.902.5	50
704.905.1	50
704.905.1/D	50
704.905.2	50
704.905.2/D	50
704.905.3	51
704.905.3/D	51
704.905.4	50
704.905.4/D	50
704.905.5	50
704.905.5/D	50
704.910.1	50
704.910.1	52
704.910.1B	51
704.910.2	50
704.910.2	52
704.910.2B	51
704.910.3	50
704.910.3	52
704.910.3B	51
704.910.4	50
704.910.4	52
704.910.4B	51
704.910.5	50
704.910.5	52
704.910.5B	51
704.911.1	50
704.911.1	52
704.911.1B	51
704.911.2	50
704.911.2	52
704.911.2B	51
704.911.3	50
704.911.3	52
704.911.3B	51
704.911.4	50
704.911.4	52
704.911.4B	51
704.911.5	50
704.911.5	52
704.911.5B	51
704.912.1	50

Typ-Nr.	Page
704.912.1	52
704.912.2	50
704.912.2	52
704.912.3	50
704.912.3	52
704.912.4	50
704.912.4	52
704.912.5	50
704.912.5	52
704.915.1	50
704.915.1	52
704.915.1/D	50
704.915.1/D	52
704.915.2	50
704.915.2	52
704.915.2/D	50
704.915.2/D	52
704.915.3	50
704.915.3	52
704.915.3/D	50
704.915.3/D	52
704.915.4	50
704.915.4	52
704.915.4/D	50
704.915.4/D	52
704.915.5	50
704.915.5	52
704.915.5/D	50
704.915.5/D	52
704.925.0	47
704.925.2	47
704.925.3	47
704.925.7	48
704.927.0	58
704.927.4	58
704.928.18	48
704.928.28	48
704.928.38	48
704.940.8	60
704.940.9	60
704.941.0	57
704.941.1	60
704.941.5	57
704.941.9	58
704.942.0	57
704.942.5	56
704.943.0	49
704.943.1	49
704.943.2	49
704.943.5	49
704.945.0	59
704.945.1	61
704.945.2	61
704.945.3	61
704.945.4	61
704.945.5	61
704.945.6	59
704.945.6	61
704.945.7	59
704.945.8	59
704.950.0	63
704.950.0	65
704.950.0	68

Index from Typ-Nr.

Typ-Nr.	Page
704.950.0	69
704.950.0	72
704.950.0	74
704.950.0B	63
704.950.0B	65
704.950.0B	68
704.950.0B	69
704.950.0B	72
704.950.0B	74
704.950.1	63
704.950.1	65
704.950.1	68
704.950.1	69
704.950.1	72
704.950.1	74
704.950.1/D	63
704.950.1/D	65
704.950.1/D	68
704.950.1/D	69
704.950.1/D	72
704.950.1/D	74
704.950.2/D	63
704.950.2/D	65
704.950.2/D	68
704.950.2/D	69
704.950.2/D	72
704.950.2/D	74
704.950.5	63
704.950.5	64
704.950.5	67
704.950.5	69
704.950.5	72
704.950.5	74
704.953.0	67
704.953.0	72
704.954.0	59
704.955.0	66
704.955.0	71
704.955.1	66
704.955.1	71
704.955.3	66
704.955.3	71
704.955.4	66
704.955.4	71
704.955.9	66
704.955.9	71
704.955.9E	66
704.955.9E	71
704.960.0	59
704.960.4	48
704.960.5	63
704.960.5	64
704.960.5	67
704.960.5	69
704.960.5	72
704.960.5	74
704.960.8	59
704.960.9	60
704.963.0	58
704.963.1	58
704.963.2	58
704.963.3	58
704.963.5	58
704.963.6	58
704.963.7	58
704.963.8	58
704.964.5	54
704.964.7	48
704.964.8	48
704.964.9	48
704.965.1	54
704.965.2	54
704.965.3	54
704.965.4	54
704.965.5	54
704.965.6	54
704.965.7	54
704.965.8	54
704.965.9	54
704.966.0	54
704.966.1	54
704.966.2	54
704.968.0	47
704.968.1	47
704.968.2	47
704.968.3	47
704.968.4	47
704.968.5	47
704.970.3	57
704.970.4	57
704.970.5	57
704.970.6	57
704.989.0	48
704.990.0	61
98-968	60

EAO AG
Tannwaldstrasse 88
4601 Olten, Switzerland

E-mail info@eao.com
Website www.eao.com

Austria
Phone +49 201 85 87 0
Fax +49 201 85 87 210
E-mail sales.ede@eao.com

Belgium
Phone +32 3 777 82 36
Fax +32 3 777 84 19
E-mail sales.ebl@eao.com

China
Phone +852 27 86 91 41
Fax +852 27 86 95 61
E-mail sales.ehk@eao.com

France
Phone +33 1 64 43 37 37
Fax +33 1 64 43 37 49
E-mail sales.ese@eao.com

Germany
Phone +49 201 85 87 0
Fax +49 201 85 87 210
E-mail sales.ede@eao.com

Italy
Phone +39 035 481 0189
Fax +39 035 481 3786
E-mail sales.eit@eao.com

Japan
Phone +81 3 5401 0953
Fax +81 3 5444 0345
E-mail sales.esj@eao.com

Netherlands
Phone +31 78 653 17 00
Fax +31 78 653 17 99
E-mail sales.enl@eao.com

Sweden
Phone +46 8 683 86 60
Fax +46 8 724 29 12
E-mail sales.esw@eao.com

Switzerland
Phone +41 62 388 95 00
Fax +41 62 388 95 55
E-mail sales.ech@eao.com

United Kingdom
Phone +44 1444 236 000
Fax +44 1444 236 641
E-mail sales.euk@eao.com

USA
Phone +1 203 877 4577
Fax +1 203 877 3694
E-mail sales.eus@eao.com

Other Countries
Phone +41 62 286 92 10
Fax +41 62 296 21 62
E-mail info@eao.com

eao