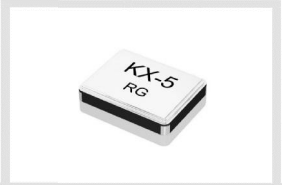

RoHS 2015/863/EU REACH compliant Conflict minerals free

GEYER quartz technology

Quartz Crystal

SMD-version

part no.	12.85516
model	KX – 5
frequency	16.0 MHz
mode	fundamental
operating temperature	-20° ~ +70°C
frequency tolerance at +25°C	±30 ppm
temperature tolerance -20° ~ +70°C	±50 ppm
load capacitance C_L	8 pF
series resistance R1 max.	200 Ohm
aging at +25°C (first year) max.	±2 ppm
shunt capacitance C_0 max.	3.5 pF
drive level	50 µW typ., 100 µW max.
contents of reel	1000 pcs.

Dimensions (mm):

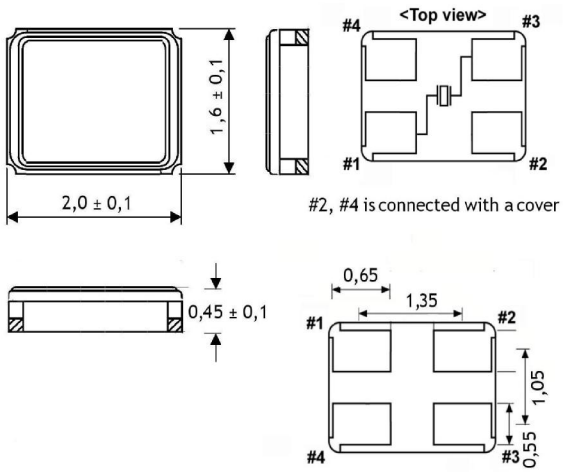

Reflow soldering condition:

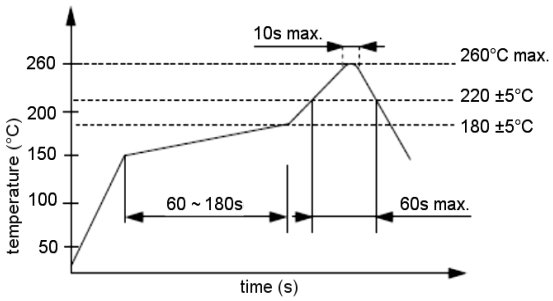

Suggested soldering pad:

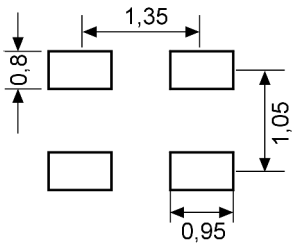

Tape specifications:

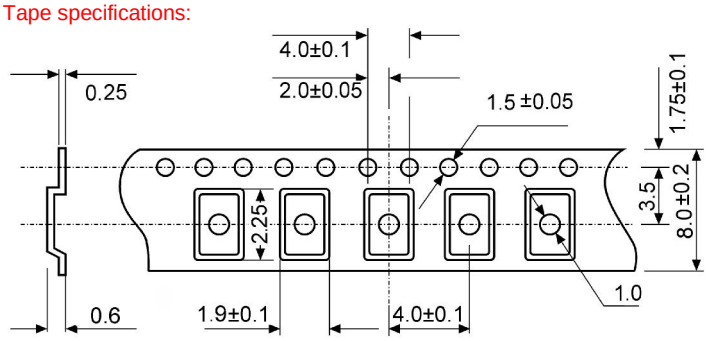

reel diameter 178 mm

GEYER ELECTRONIC e.K. Lochhamer Schlag 5 82166 Gräfelfing/München
Tel. +49 89 546868-0 quartz@geyer-electronic.de www.geyer-electronic.de

Downloaded from Arrow.com.