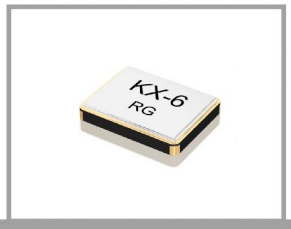

RoHS 2011/65/EU REACH compliant Conflict minerals free

GEYER quartz technology

Quartz Crystal

SMD-version

model	KX – 6T
frequency	48,0 MHz
mode	fundamental
operating temperature	-40° ~ +85°C
frequency tolerance at +25°C	± 30 ppm
temperature tolerance -40° ~ +85°C	± 100 ppm
load capacitance C_L	10 pF
series resonance R1 max.	50 Ohm
aging at 25°C (first year) max.	± 2 ppm
shunt capacitance C_0 max.	3,5 pF
drive level max.	50 µW typ., 100 µW max.
contents of reel	1000 pcs.
part no.	12.86530

Dimensions (mm):

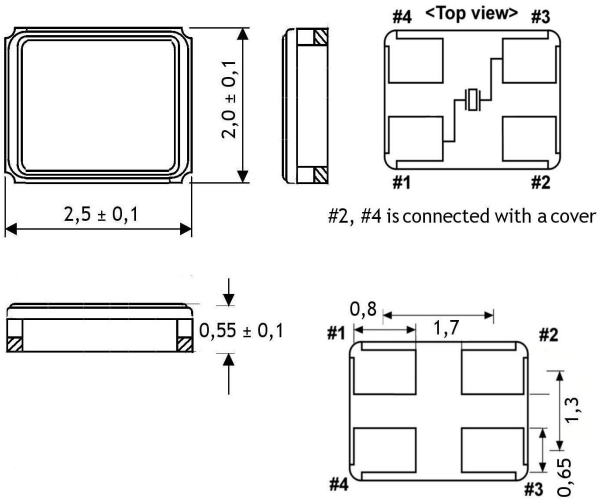

Reflow soldering condition:

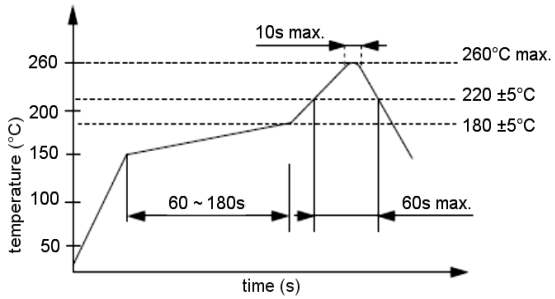

Suggested soldering pad:

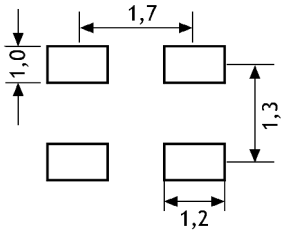

Tape specification:

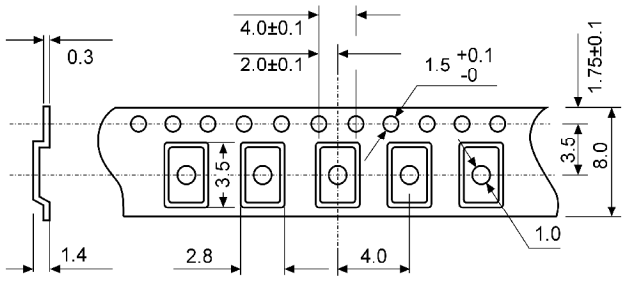

reel diameter 178 mm

GEYER ELECTRONIC e.K. Lochhamer Schlag 5 82166 Gräfelfing/München
Tel. +49 89 546868-0 quartz@geyer-electronic.de www.geyer-electronic.de

Downloaded from Arrow.com.