TOP VIEW

ISOMETRIC VIEWS

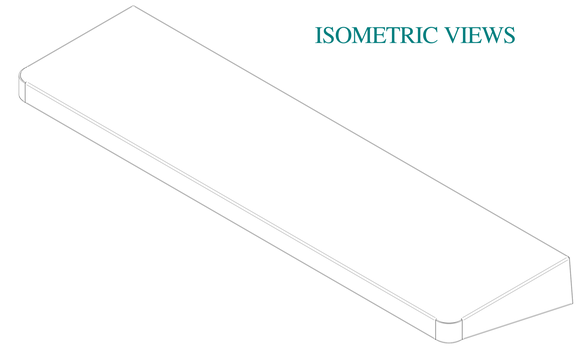

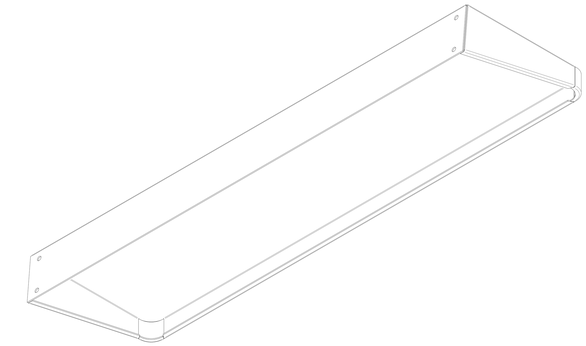

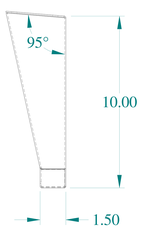

SIDE VIEW

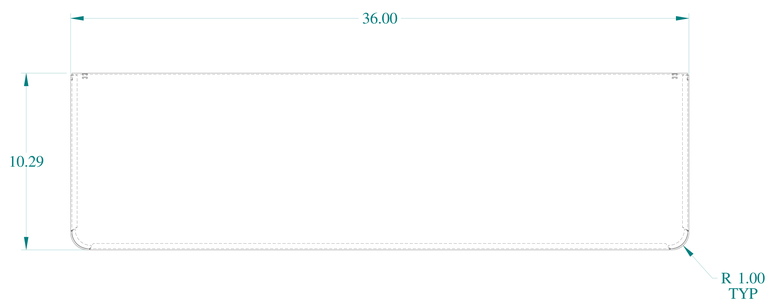

FRONT VIEW

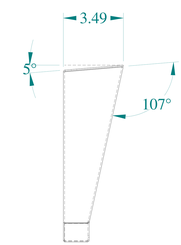

SIDE VIEW

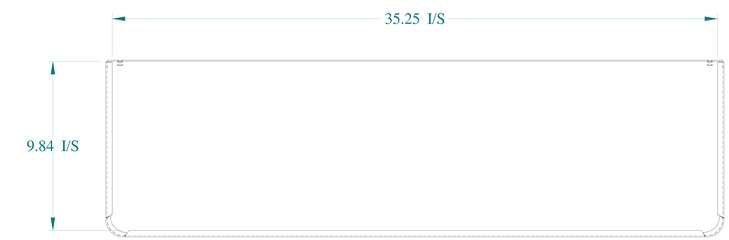

BACK VIEW

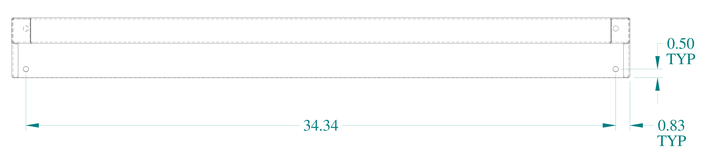

BOTTOM VIEW

HAMMOND MANUFACTURING®

www.hammondmfg.com

Data subject to change without notice.

Part # : 1472-36W	Date : Mar. 24, 2019

Link:www.hammfg.com/1472-36W