Alle Rechte vorbehalten/ *All rights reserved*

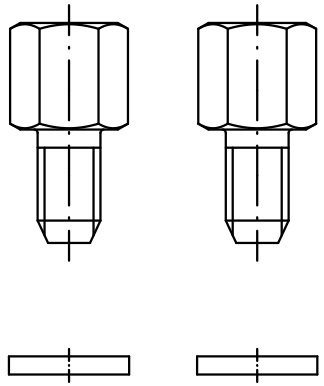

PAIR

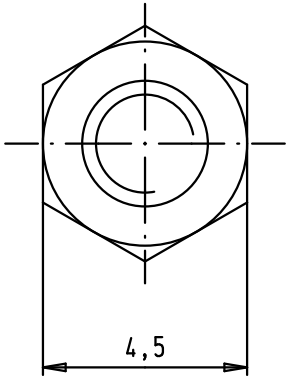

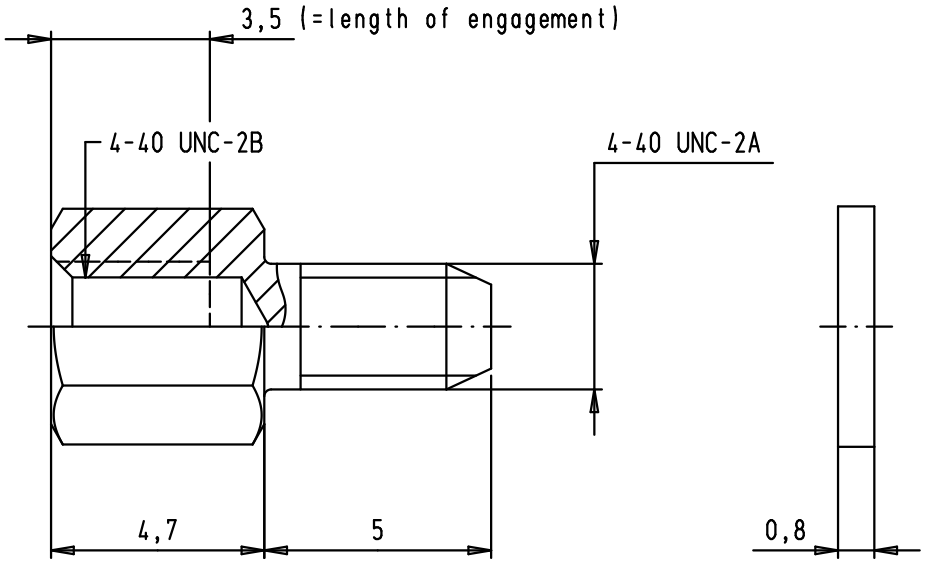

Material : Tin plated brass
Packaging : Pair of screw locks and washers

				Dat.	Name			Maßstab/ *Scale*
			Detail.	07/01/04	SH	All Dim. in mm Orig. Size DIN A 4	Female screw lock 4-40 UNC/4-40 UNC, washer, pair	6:1
			Insp.					
			Stand.					
EC00323	13/03/09	PK	HARTING EURL F-95972 Paris				TB 09 67 002 9007	Blatt/ *Page* 1/1
31587	07/01/04	SH					Sub.	
Mod.	Dat.	Name						