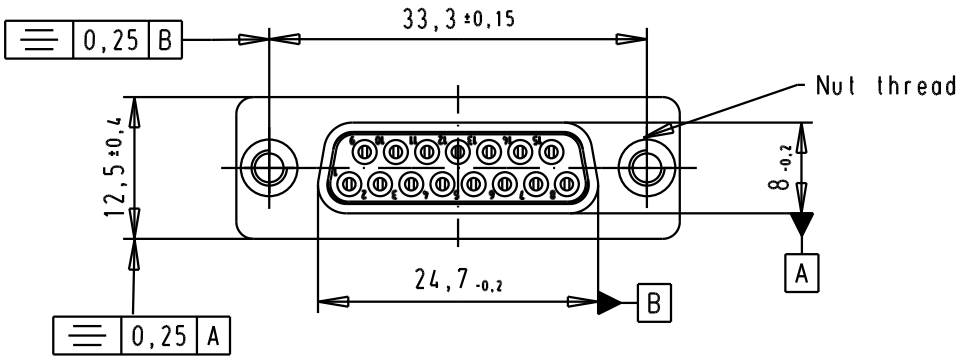

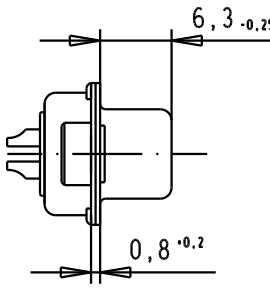

Solder buckets for AWG

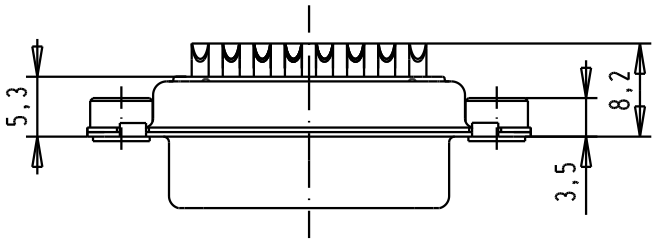

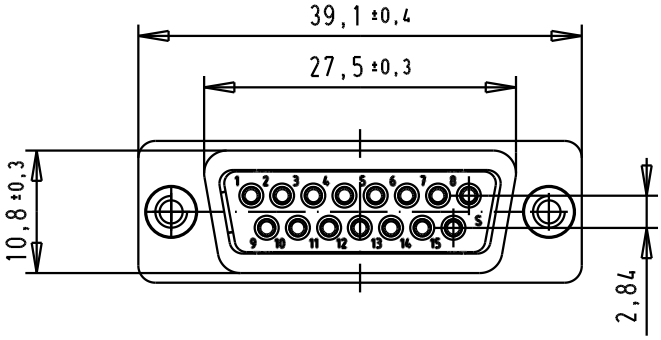

							Dat.	Name
						Detail.	8-JUL-02	CV
						Insp.		
						Stand.		
09642117248	M3		33250	03/11/05	JMDR			
09642117247	UNC 4-40		31058	8-JUL-02	CV			
Part number	Nut thread		Mod.	Dat.	Name			

All Dim. in mm
Orig. Size DIN A 4

HARTING EURL
F-95972 Paris

Downloaded from Arrow.com.