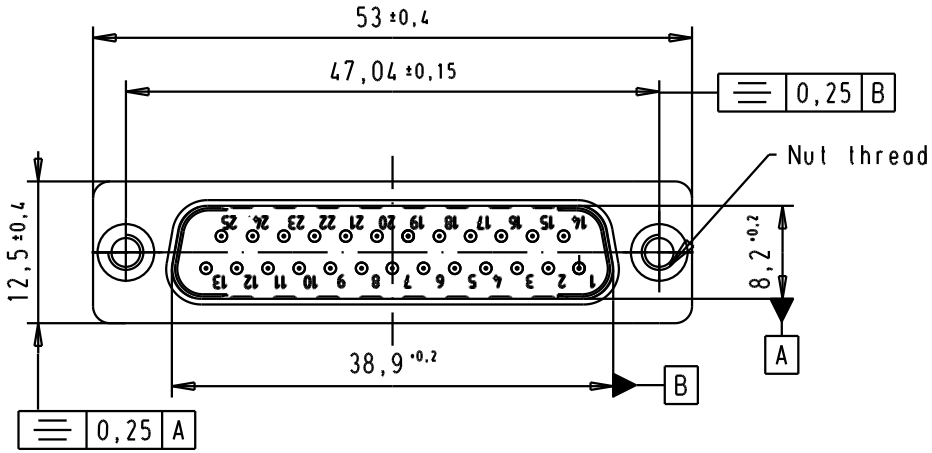

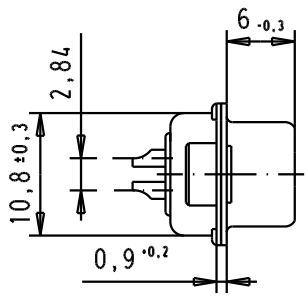

Solder bucket for AWG 20

SPECIFICATION

Mating Cycles	500
Filter type	C
Capacitance	3900pf ±20%
Working Voltage	100v
Current Rating	7.5A
Insulation Resistance	>1GΩ

FREQUENCY (MHz)	ATTENUATION (dB)
5	6dB
10	11dB
50	25dB
100	35dB
500	35dB
1000	32dB

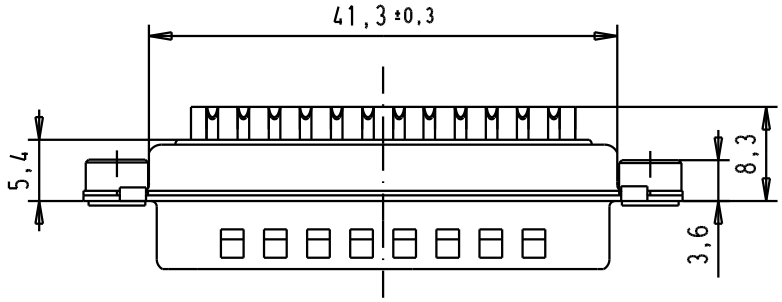

							Dat.	Name
						Detail.	8-JUL-02	CV
						Insp.		
						Stand.		
09643217248	M3		33423	06/02/06	JMDR			
09643217247	UNC 4-40		31058	8-JUL-02	CV			
Part number	Nut thread		Mod.	Dat.	Name			

All Dim. in mm
Orig. Size DIN A 4

D-Sub, male, Straight
25 Poles, turned solder buckets,
tin plated shell with dimples
and clinch nuts

Ma?Mstab/ Scale 1.5:1

HARTING EURL
F-95972 Paris

TB 0964321724x

Sub.

Blatt/ Page 1/1

Downloaded from Arrow.com.