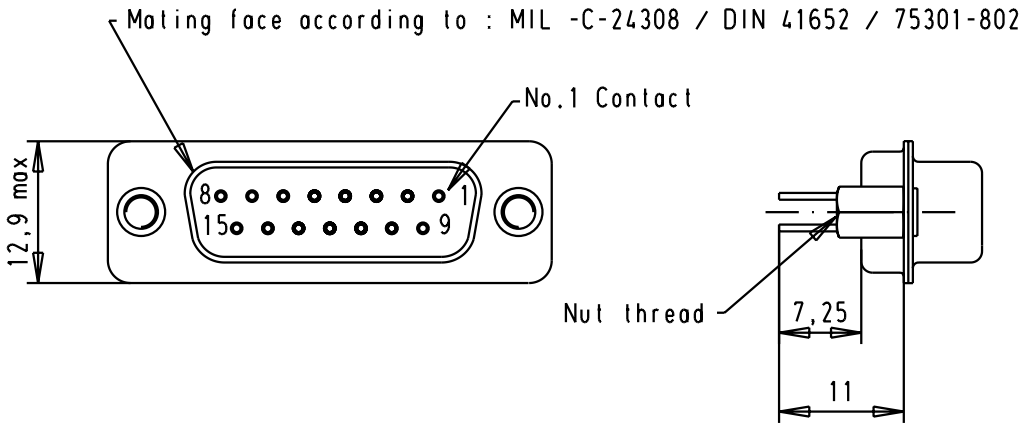

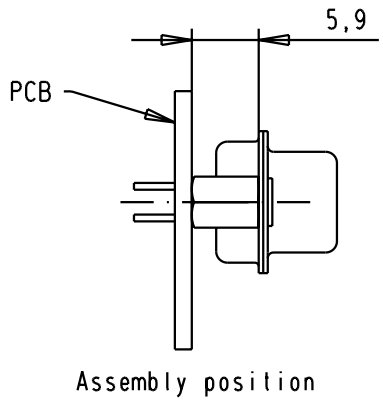

SPECIFICATION

Mating Cycles	200
Capacitance	1000pf±20%
Working Voltage	100v
Current Rating	7.5A
Insulation Resistance	>1GΩ

FREQUENCY (MHz)	ATTENUATION (dB)
5	1dB
10	3dB
50	12dB
100	20dB
500	34dB
1000	30dB

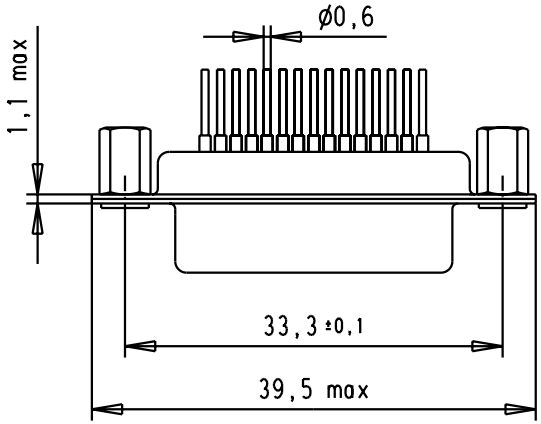

PCB Layout
Component side

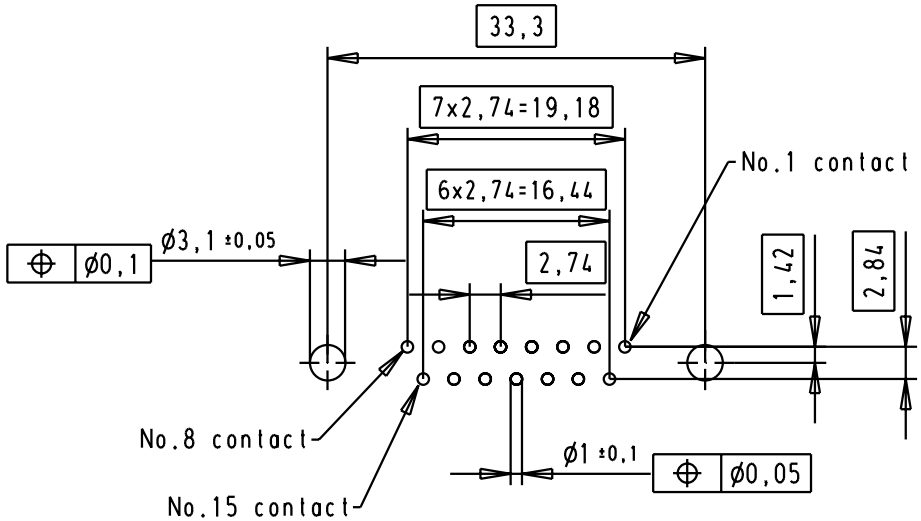

							Dat.	Name	All Dim. in mm Orig. Size DIN A 4	D-Sub, female, straight, 15 Poles, with turned solder pin and spacer nut	Ma?Mstab/ Scale
						Detail.	8-JUL-02	CV			1.5:1
						Insp.					
						Stand.					
09642127234	M3								HARTING EURL F-95972 Paris	TB 0964212723x	Blatt/ Page
09642127233	UNC 4-40		31058	8-JUL-02	CV						1/3
Part number	Nut thread		Mod.	Dat.	Name					Sub.	

Downloaded from Arrow.com.