Alle Rechte vorbehalten/ *All rights reserved*

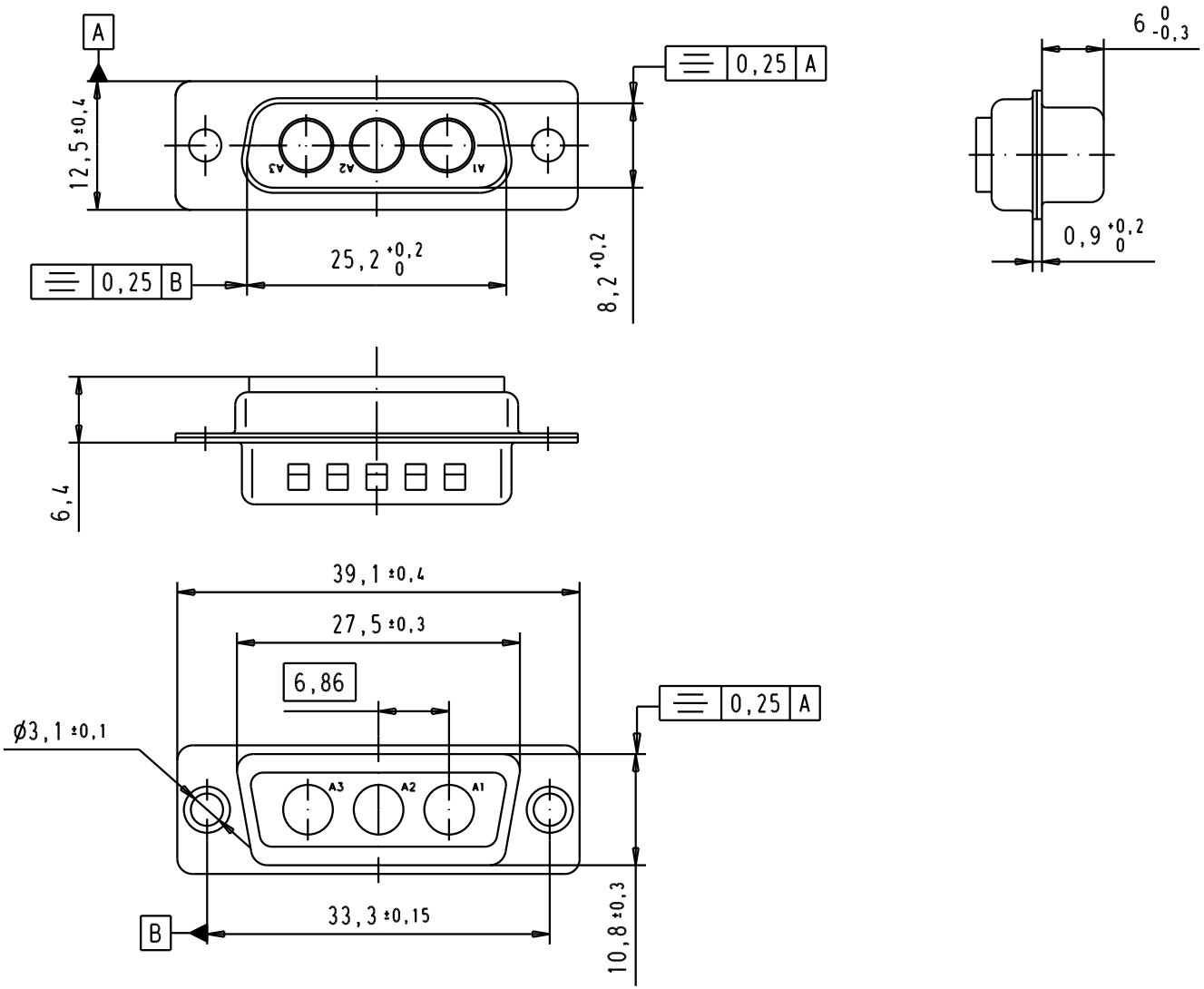

09 69 210 0033.500	Non magnetic
09 69 210 0033	
Part number	

Mod.	Dat.	Name
32119	23/06/04	AC
31519	03/07/03	TCP
29742	12/11/01	AF

	Dat.	Name
Detail.	12/11/01	AF
Insp.		
Stand.		

All Dim. in mm
Orig. Size DIN A 4

HARTING EURL
F-95972 Paris

D-Sub, male,
3W3 without contacts,
with tin plated shell
and dimples.

TB 09 69 210 0033

Sub.

Maßstab/ *Scale* 1,5:1

Blatt/ *Page* 1/1

Downloaded from Arrow.com.