	COUNT	DESCRIPTION OF REVISIONS	BY	CHKD	DATE		COUNT	DESCRIPTION OF REVISIONS	BY	CHKD	DATE
1	1	DIS-C-000409	D.M	M.S	06.12.19						. .
											. .
											. .

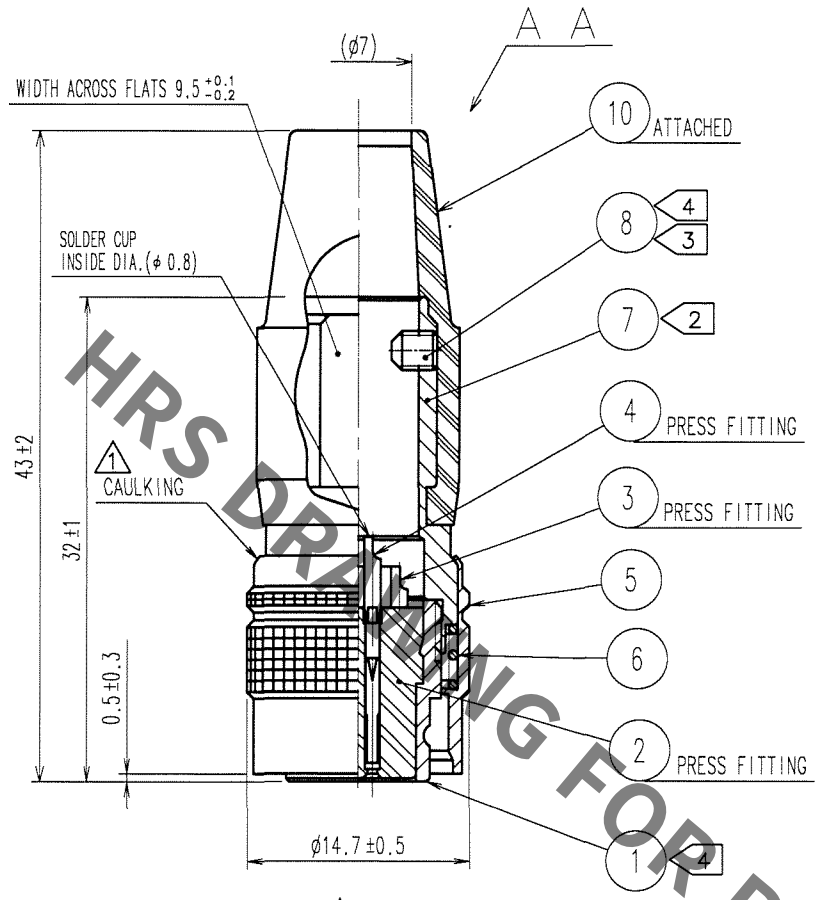

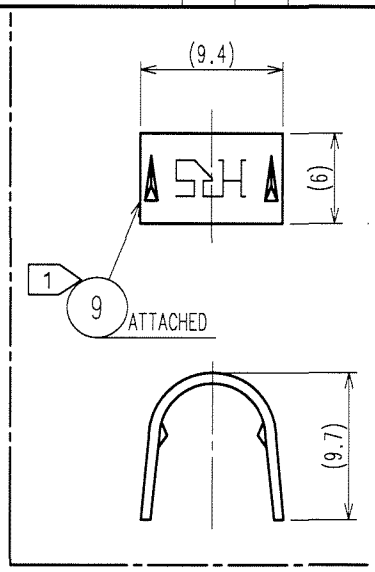

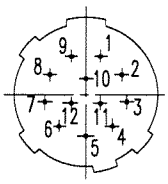

CONTACT ARRANGEMENTS
VIEWED FROM THE MATING SIDE

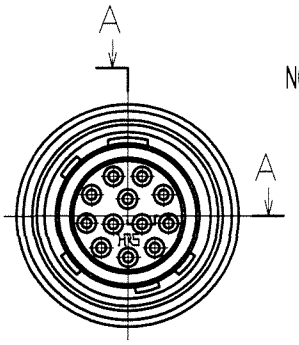

NOTE 1 HAND CRIMPING TOOL,REF.NO.⑨: HR10A-TC-02, APPLY TO ϕ 7.
2 THE RECOMMENDED CLAMP TORQUE,REF.NO.⑦: 2-2.5 N・m.
3 ACROSS FLATS HEXAGON HEAD OF REF.NO.⑧: 1.27
THE RECOMMENDED CLAMP TORQUE,REF.NO.⑧: 0.3-0.4N・m.
4 LOCTITE 242,HENKEL JAPAN OR EQUIVALENT IS RECOMMENDED TO PREVENT REF.NO.①AND⑧FOR LOOSENING.
5 ONE EXAMPLE OF THE ROTATION OF REF.NO.⑦TO REF.NO.①IS SHOWN.

NO.	MATERIAL	FINISH, REMARKS	NO.	MATERIAL	FINISH, REMARKS
5	BRASS	MATTE FINISH NICKEL PLATING	10	CR	(BLACK)
4	PHOSPHOR BRONZE	SILVER PLATING 2μm min.	9	BRASS	
3	PHOSPHOR BRONZE		8	STEEL	NICKEL PLATING JIS C 1177,HEXAGON SOCKET SET SCREW M2.6×0.45×3
2	POLYAMIDE	(BLACK) UL94V-0	7	BRASS	NICKEL PLATING
1	ZINC ALLOY	MATTE FINISH NICKEL PLATING	6	STEEL	NICKEL PLATING

CODE NO.(OLD)	DRAWN	DESIGNED	CHECKED	APPROVED	RELEASED
CL	H.KISHI '05.08.31	H.KISHI '05.08.31	E.KUNII '05.09.02	M.SATO '05.09.02	

SACLE 2 : 1
UNITS mm

DRAWING NO. EDC4-020552-73

PART NO. HR10A-10P-12S(73)

HRS HIROSE ELECTRIC CO.,LTD.

CODE NO. CL110-0402-0-73

1/1

FORM NO.228

TO
R

HRS DRAWING FOR REFERENCE

Oct.1.2019 Copyright 2019 HIROSE ELECTRIC CO., LTD. All Rights Reserved.
In case of consideration for using Automotive equipment / device which demand high reliability, kindly contact our sales window correspondents.