May.1.2020 Copyright 2020 HIROSE ELECTRIC CO., LTD. All Rights Reserved.
In case of consideration for using Automotive equipment / device which demand high reliability, kindly contact our sales window correspondents.

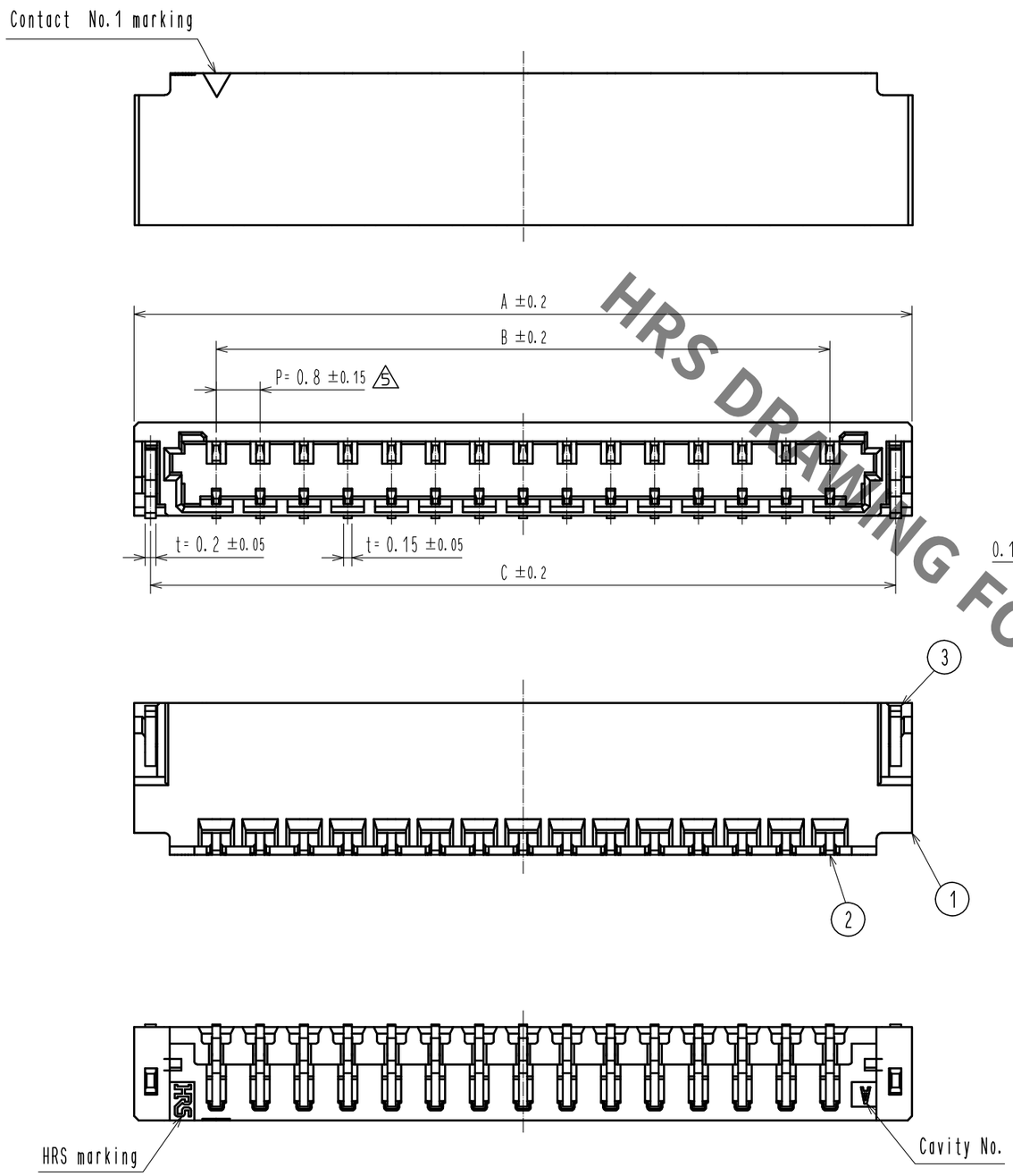

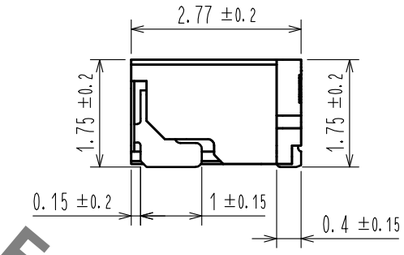

Recommended PCB layout
Recommended metal mask (thickness:0.1mm)

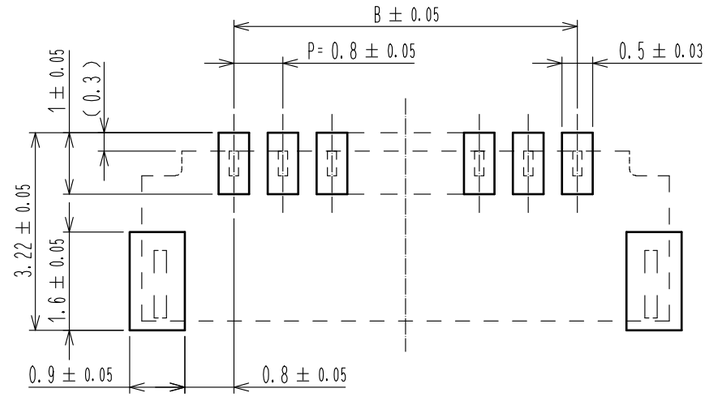

Mating Figure (Free)

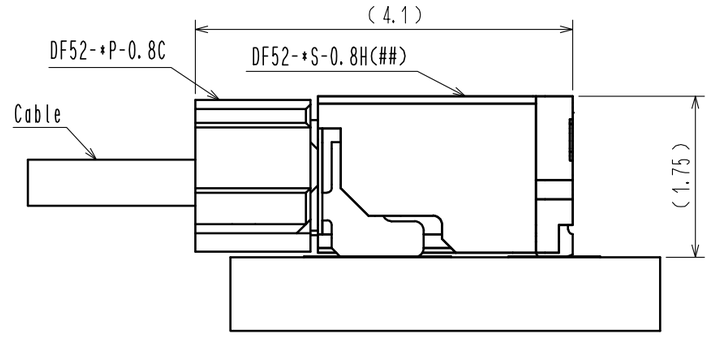

Part No.	Code No.	A	B	C
DF52-2S-0.8H(21)	CL0668-0004-5-21	3.8	0.8	3.2
DF52-3S-0.8H(21)	CL0668-0022-7-21	4.6	1.6	4.0
DF52-4S-0.8H(21)	CL0668-0005-8-21	5.4	2.4	4.8
DF52-5S-0.8H(21)	CL0668-0023-0-21	6.2	3.2	5.6
DF52-6S-0.8H(21)	CL0668-0006-0-21	7.0	4.0	6.4
DF52-8S-0.8H(21)	CL0668-0007-3-21	8.6	5.6	8.0
DF52-10S-0.8H(21)	CL0668-0008-6-21	10.2	7.2	9.6
DF52-12S-0.8H(21)	CL0668-0009-9-21	11.8	8.8	11.2
DF52-14S-0.8H(21)	CL0668-0024-2-21	13.4	10.4	12.8
DF52-15S-0.8H(21)	CL0668-0010-8-21	14.2	11.2	13.6
DF52-16S-0.8H(21)	CL0668-0025-5-21	15.0	12.0	14.4
DF52-17S-0.8H(21)	CL0668-0001-7-21	15.8	12.8	15.2
DF52-20S-0.8H(21)	CL0668-0011-0-21	18.2	15.2	17.6

Note 1. Lead co-planarity shall be 0.1mm MAX.
2. Please consult HIROSE when the product is mounted to FPC.

NO.	MATERIAL	FINISH , REMARKS	NO.	MATERIAL	FINISH , REMARKS
3	Brass 5	Surface:tin plating 1μmMIN	6	PS	Black(Reel)
2	Copper alloy	Surface:tin plating 1μmMIN	5	Polyester	Clear(Cover tape), ANTI-STATIC
1	Polyamide	Black. UL94V-0	4	PS	Clear(Embossed carier tape), ANTI-STATIC

UNITS	SCALE	COUNT	DESCRIPTION OF REVISIONS	DESIGNED	CHECKED	DATE
mm	10: 1	5 2	DIS-H-00003668	HK. HAYASHI	TS. FUKUSHIMA	18.03.22

HRS HIROSE ELECTRIC CO., LTD.

APPROVED	KI. AKIYAMA	14.06.27
CHECED	HK. UMEHARA	14.06.27
DESIGNED	TH. YOSHIZAWA	14.06.26
DRAWN	TH. YOSHIZAWA	14.06.26

DRAWING NO. EDC3-356517-01
PART NO. DF52-*S-0.8H(21)
CODE NO. CL668-
5 1/2

HRS DRAWING FOR REFERENCE

May.1.2020 Copyright 2020 HIROSE ELECTRIC CO., LTD. All Rights Reserved.
In case of consideration for using Automotive equipment / device which demand high reliability, kindly contact our sales window correspondents.

Drawing for packing (Free)

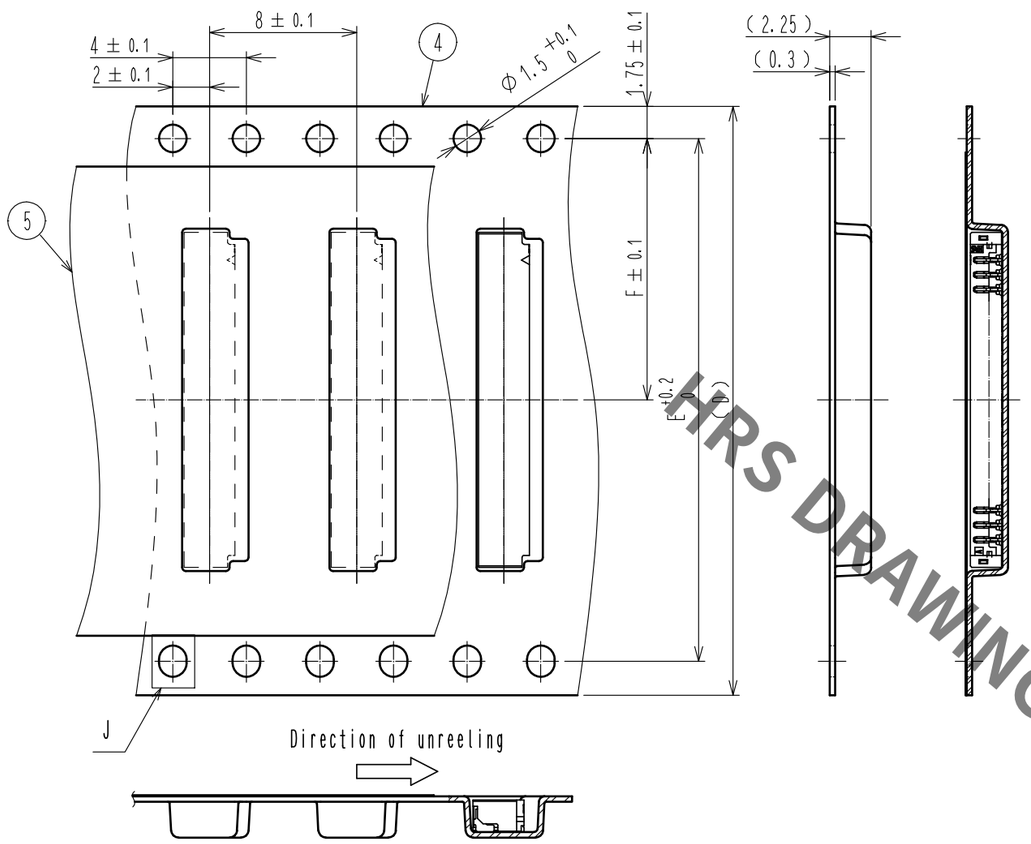

Style and dimension of reel (Free)

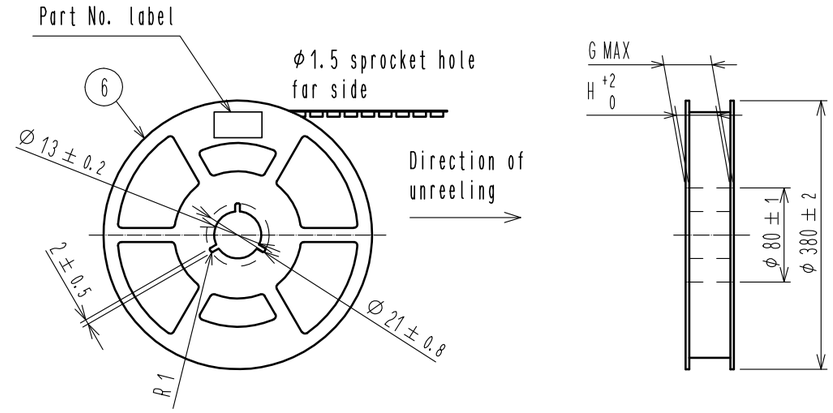

Detail of part No. label

Lot No.	170 7010
CL Code	CL668-0001-7-21
品 名 (Part Number)	DF52-17S-0.8H(21)
納入数量 (Q'ty)	5000 KO
ヒロセ電機(株)	

7

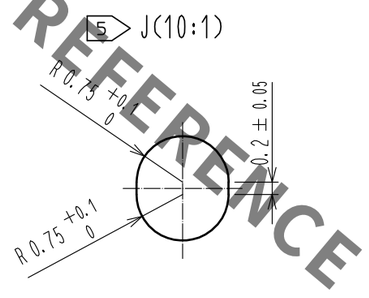

Taping (Free)

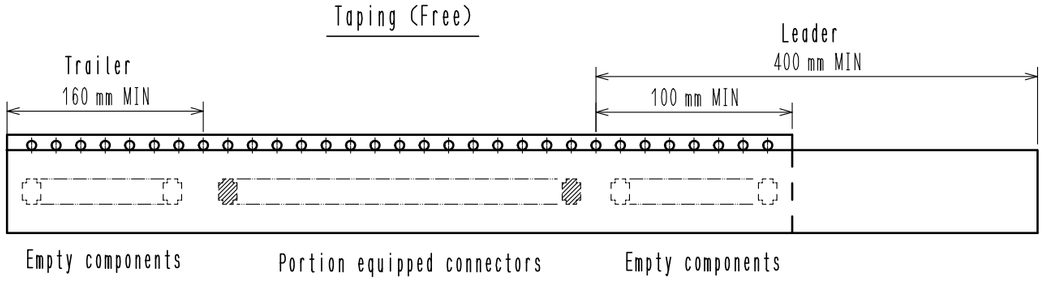

Reflow temperature profile using lead-free solder paste (Reference)

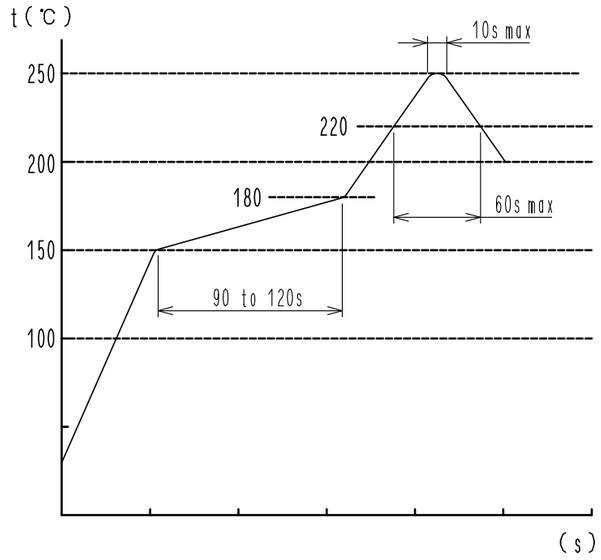

Number of reflow cycles 2 cycles MAX.
The temperature is measured in the terminal lead part.

Additional factors, such as solder paste type, PCB size and other mounted components could affect the profile, therefore, a thorough evaluation of mounting condition is required prior to production.

Note 3. 1reel:5000 connectors.
4. ( )is reference dimension.
5 When the tape width is 32mm, sprocket holes shall be set on both side of reel as shown on this drawing.
6 Refer to JIS C 0806.(Packaging of components for automationg handling)
7 Each meaning of Lot No. are shown below.

170 7010
- Serial number of reel
- '0'
- Number of contacts(Ex. 17 contacts:17, 2 contacts: 02)

Part No.	Code No.	D	E	F	G	H
DF52-2S-0.8H(21)	CL0668-0004-5-21	16.0		7.5	22.4	16.4
DF52-3S-0.8H(21)	CL0668-0022-7-21	16.0		7.5	22.4	16.4
DF52-4S-0.8H(21)	CL0668-0005-8-21	16.0		7.5	22.4	16.4
DF52-5S-0.8H(21)	CL0668-0023-0-21	16.0		7.5	22.4	16.4
DF52-6S-0.8H(21)	CL0668-0006-0-21	16.0		7.5	22.4	16.4
DF52-8S-0.8H(21)	CL0668-0007-3-21	24.0		11.5	30.4	24.4
DF52-10S-0.8H(21)	CL0668-0008-6-21	24.0		11.5	30.4	24.4
DF52-12S-0.8H(21)	CL0668-0009-9-21	24.0		11.5	30.4	24.4
DF52-14S-0.8H(21)	CL0668-0024-2-21	24.0		11.5	30.4	24.4
DF52-15S-0.8H(21)	CL0668-0010-8-21	24.0		11.5	30.4	24.4
DF52-16S-0.8H(21)	CL0668-0025-5-21	24.0		11.5	30.4	24.4
DF52-17S-0.8H(21)	CL0668-0001-7-21	24.0		11.5	30.4	24.4
DF52-20S-0.8H(21)	CL0668-0011-0-21	32.0	28.4	14.2	38.4	32.4

HRS DRAWING FOR REFERENCE

HRS

DRAWING NO.	EDC3-356517-01
PART NO.	DF52-*S-0.8H(21)
CODE NO.	CL668-

5 2/2