Apr.1.2020 Copyright 2020 HIROSE ELECTRIC CO., LTD. All Rights Reserved.
In case of consideration for using Automotive equipment / device which demand high reliability, kindly contact our sales window correspondents.

	COUNT	DESCRIPTION OF REVISIONS	BY	CHKD	DATE		COUNT	DESCRIPTION OF REVISIONS	BY	CHKD	DATE
△					. .	△					. .
△					. .	△					. .
△					. .	△					. .

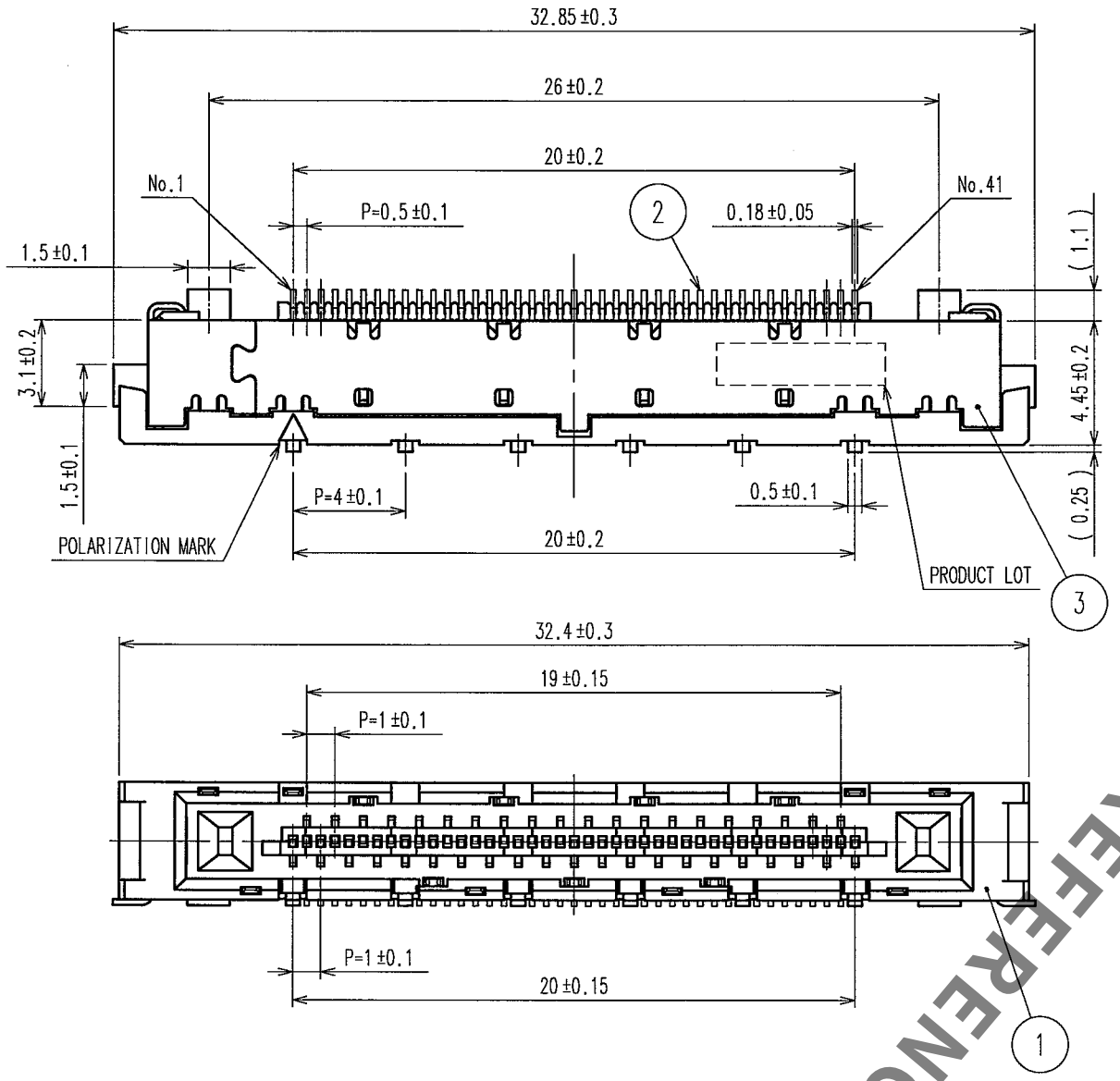

RECOMMENDED LAND PATTERN DIMENSION

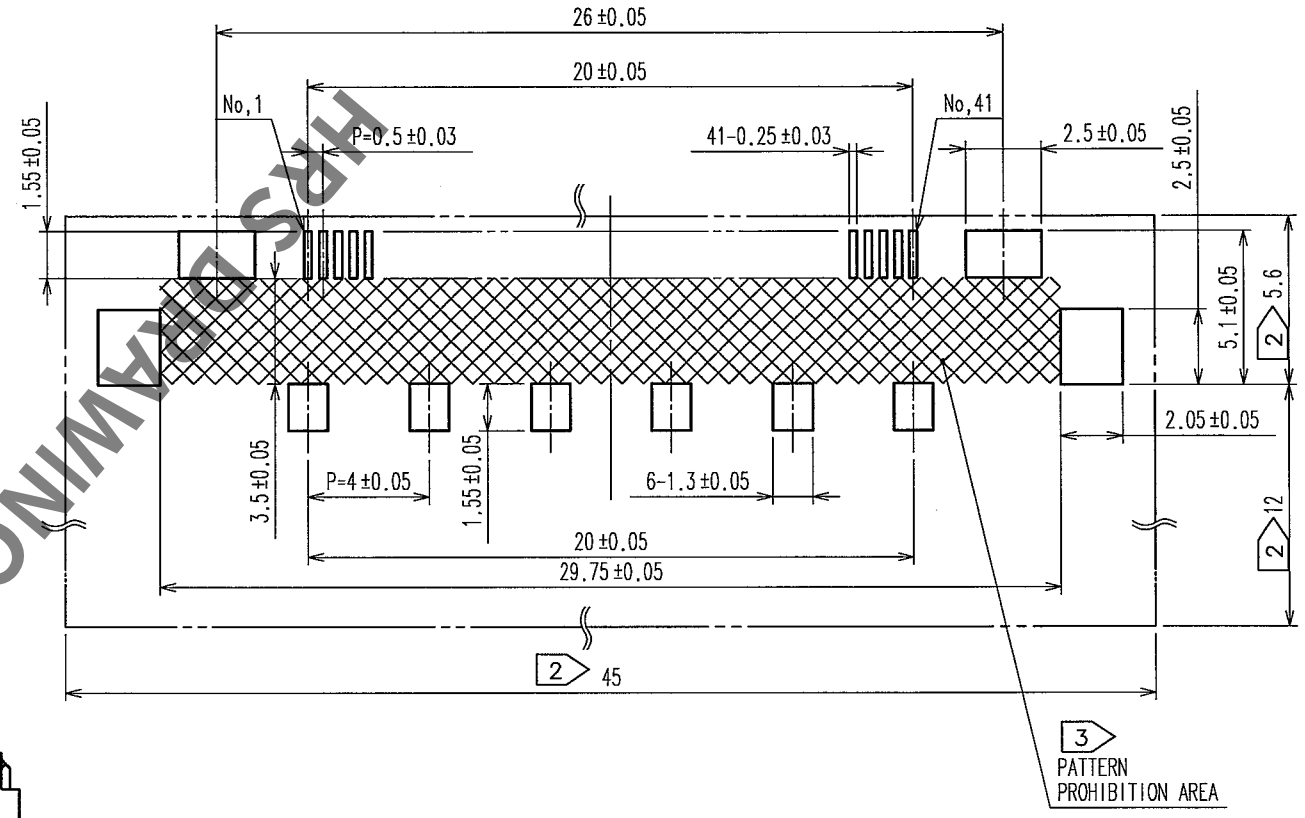

HRS DRAWING FOR REFERENCE

NOTE 1 LEAD CO-PLANARITY OF THIS PRODUCT TO BE 0.1MAX.
2 DO NOT MOUNT OTHER DEVICES ONTO ▭ AREA, OR MATINGPAIR CANNOT BE MATED AND OPERATED THE LOCK PARTS.
3 ▨ AREA OF INNER SMT LAND REQUIRES PATTERN PROHIBITION OR RESIST TREATMENT TO PREVENT THE PATTERN TOUCHING TO THE CONTACTS.
4 PACKAGING FOR THIS PRODUCT APPLIES EMBOSSED CARRIER TAPE PACKAGING. SEE SHEET 2/2 FOR DETAILS.
5 FINE SCRATCHES COULD BE FOUND ON THE SURFACE OF REF.③GROUND PLATE, WHICH DOES NOT AFFECT THE PERFORMANCE.

TO

NO.	MATERIAL	FINISH, REMARKS	NO.	MATERIAL	FINISH, REMARKS
3	STAINLESS STEEL	TIN PLATING	2	COPPER ALLOY	CONTACT AREA:GOLD 0.1μm min.
1	PA	BLACK, UL94 V-0			LEAD AREA:TIN PLATING 1μm min.
					UNDER PLATING:NICKEL 0.5μm min.

CODE NO.(OLD)	DRAWN	DESIGNED	CHECKED	APPROVED	RELEASED
	T.NODA '07 07.26	T.Noda '07.7.26	E.Nakatsuki 07.07.26	H.Okawa 07.07.26	

SCALE 4 : 1	DRAWING NO. EDC3-156703	PART NO. FX15SC-41S-0.5SH
UNITS mm	HRS HIROSE ELECTRIC CO., LTD	CODE NO. CL575-2310-2 1/2

FORM NO.228

Apr.1.2020 Copyright 2020 HIROSE ELECTRIC CO., LTD. All Rights Reserved.
In case of consideration for using Automotive equipment / device which demand high reliability, kindly contact our sales window correspondents.

	COUNT	DESCRIPTION OF REVISIONS	BY	CHKD	DATE		COUNT	DESCRIPTION OF REVISIONS	BY	CHKD	DATE
△					. .	△					. .
△					. .	△					. .
△					. .	△					. .

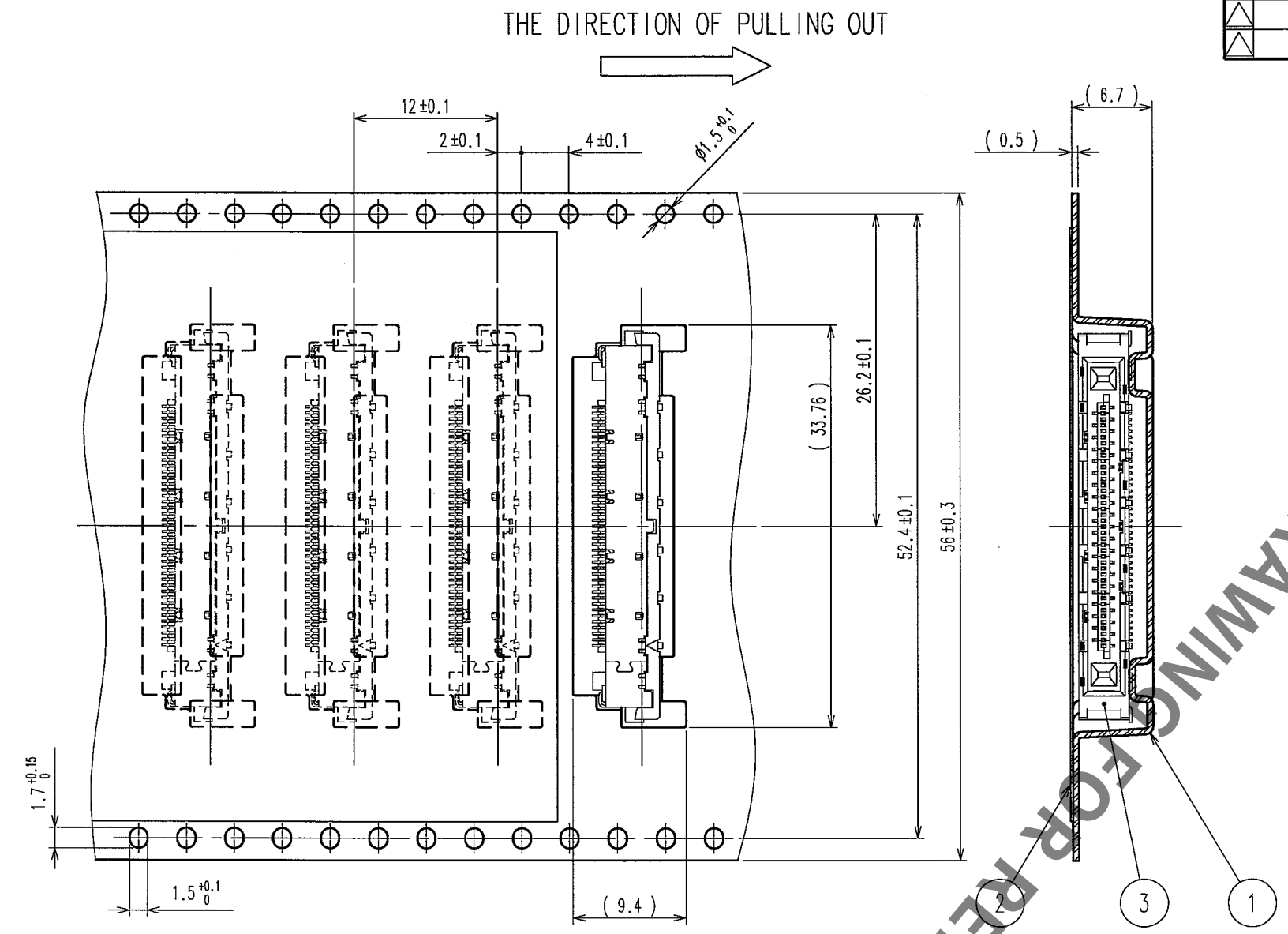

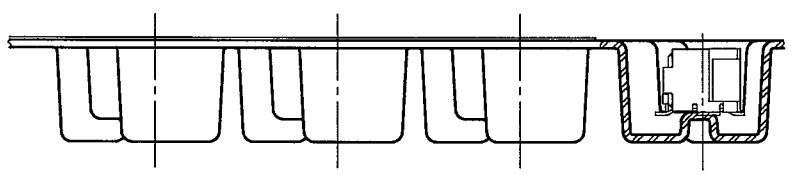

REELED DIMENSION (FREE)

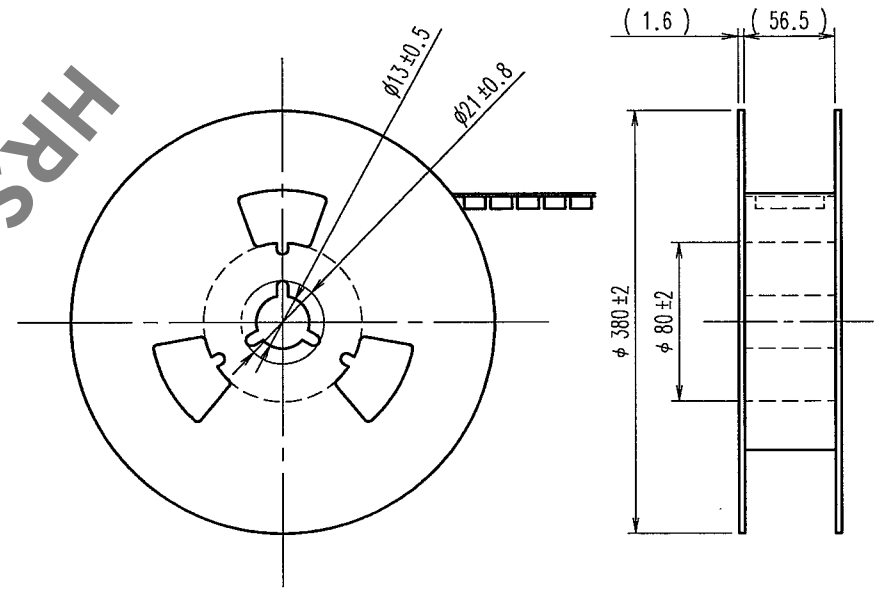

HRS DRAWING FOR REFERENCE

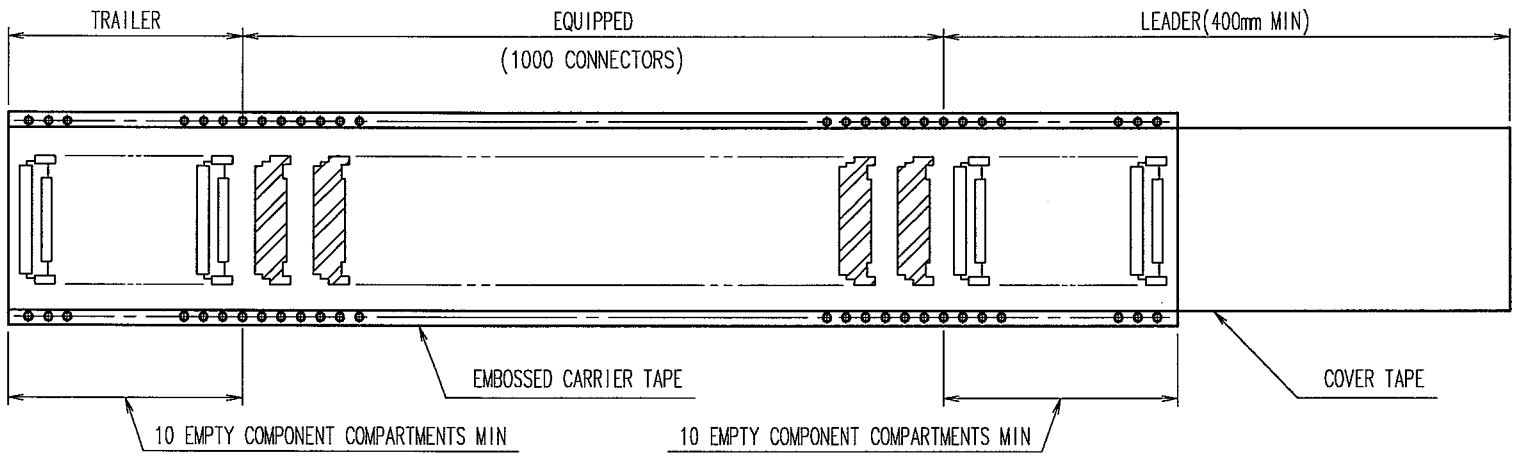

NO.	MATERIAL	FINISH, REMARKS
3	-	(CONNECTOR)
2	PE	(COVER TAPE)
1	PS	(EMBOSSED CARRIER TAPE)

CODE NO.(OLD)	DRAWN	DESIGNED	CHECKED	APPROVED	RELEASED
	T.NODA '07 07.26	T.Noda 07.7.26	E.Nakatsuchi '07.07.26	H.Okawa '07.07.26	

SCALE 2 : 1	DRAWING NO. EDC3-156703	PART NO. FX15SC-41S-0.5SH
UNITS mm	HRS HIROSE ELECTRIC CO., LTD	CODE NO. CL575-2310-2 2/

TO

FORM NO.229