Jun.1.2020 Copyright 2020 HIROSE ELECTRIC CO., LTD. All Rights Reserved.
In case of consideration for using Automotive equipment / device which demand high reliability, kindly contact our sales window correspondents.

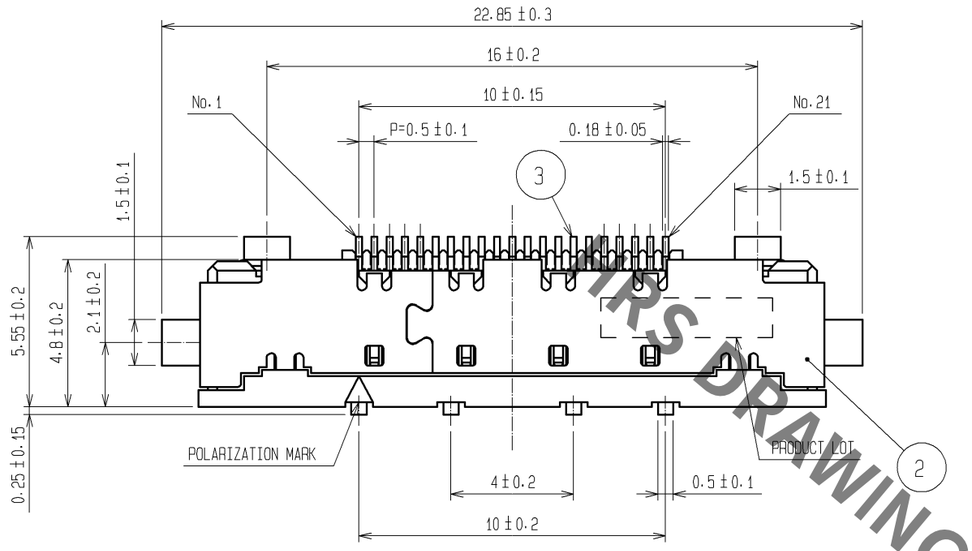

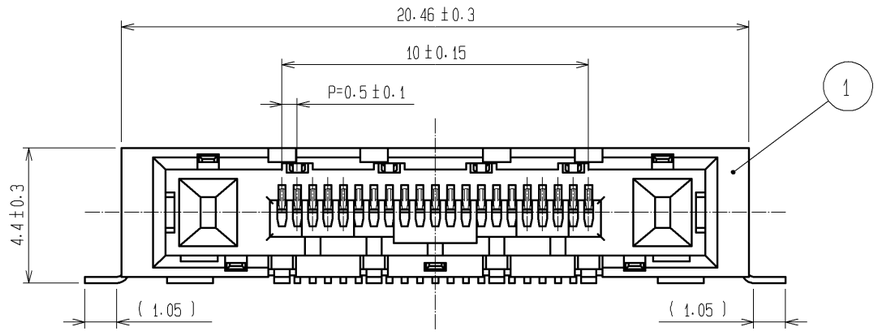

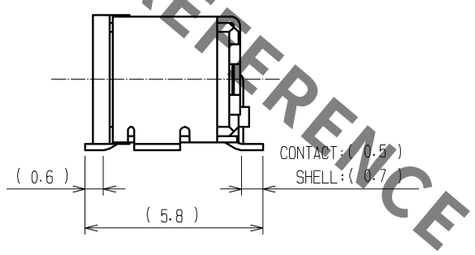

RECOMMENDED LAND PATTERN DIMENSION (4:1)

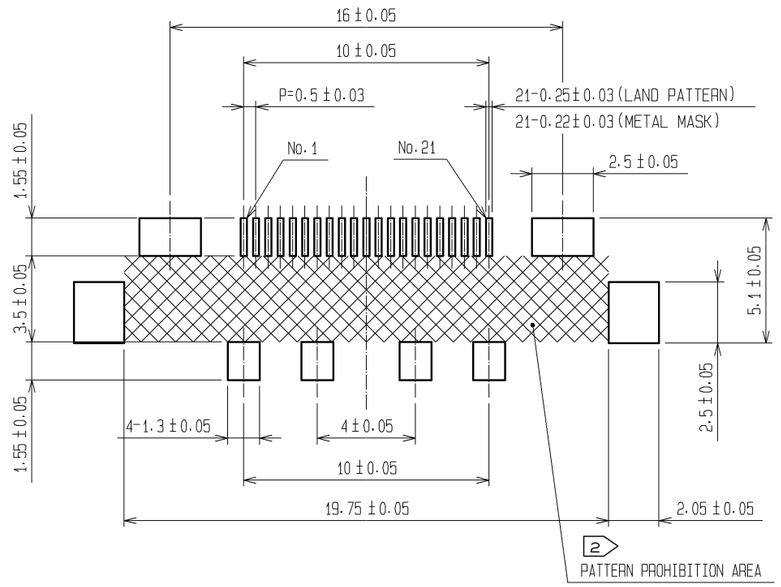

THIS DRAWING FOR REFERENCE

NOTE
1. LEAD CO-PLANARITY OF THIS PRODUCT TO BE 0.1MAX.
2. ▨ AREA OF INNER SMT LAND REQUIRES PATTERN PROHIBITION OR RESIST TREATMENT TO PREVENT THE PATTERN TOUCHING TO THE CONTACTS.
3. ( )INDICATES A REFERENCE DIMENSION.
4. MANUFACTURING PROCESS COULD LEAVE SCRATCH AND/OR PUNCH MARKS HAVING NO AFFECT ON THE PRODUCT PERFORMANCE.
5. PACKAGING FOR THIS PRODUCT APPLIES EMBOSSED CARRIER TAPE PACKAGING. SEE SHEET 2/2 FOR DETAILS.

NO.	MATERIAL	FINISH , REMARKS	NO.	MATERIAL	FINISH , REMARKS
			5	PE	(COVER TAPE)
			4	PS	(EMBOSSED CARRIER TAPE)
2	PHOSPHOR BRONZE	OVER PLATING:TIN PLATING 1μm min UNDER PLATING:NICKEL 0.2μm min	3	PHOSPHOR BRONZE	CONTACT AREA:GOLD 0.1μm min LEAD AREA:GOLD 0.03μm min UNDER PLATING:NICKEL 1μm min
1	LCP	BLACK, UL94V-0			

UNITS	SCALE	COUNT	DESCRIPTION OF REVISIONS	DESIGNED	CHECKED	DATE
mm	5 : 1	△				

HIROSE ELECTRIC CO., LTD.

APPROVED	:HS.OKAWA	11.09.15	DRAWING NO.	EDC3-157339-02
CHECED	:HT.YAMAGUCHI	11.09.15	PART NO.	FX16-21S-0.5SH(30)
DESIGNED	:TS.MIYAKI	11.09.15	CODE NO.	CL575-3411-5-30 △ 1/2
DRAWN	:TS.MIYAKI	11.09.15		

Jun.1.2020 Copyright 2020 HIROSE ELECTRIC CO., LTD. All Rights Reserved.
In case of consideration for using Automotive equipment / device which demand high reliability, kindly contact our sales window correspondents.

DRAWING FOR PACKING(2:1)

THE DIRECTION OF PULLING OUT

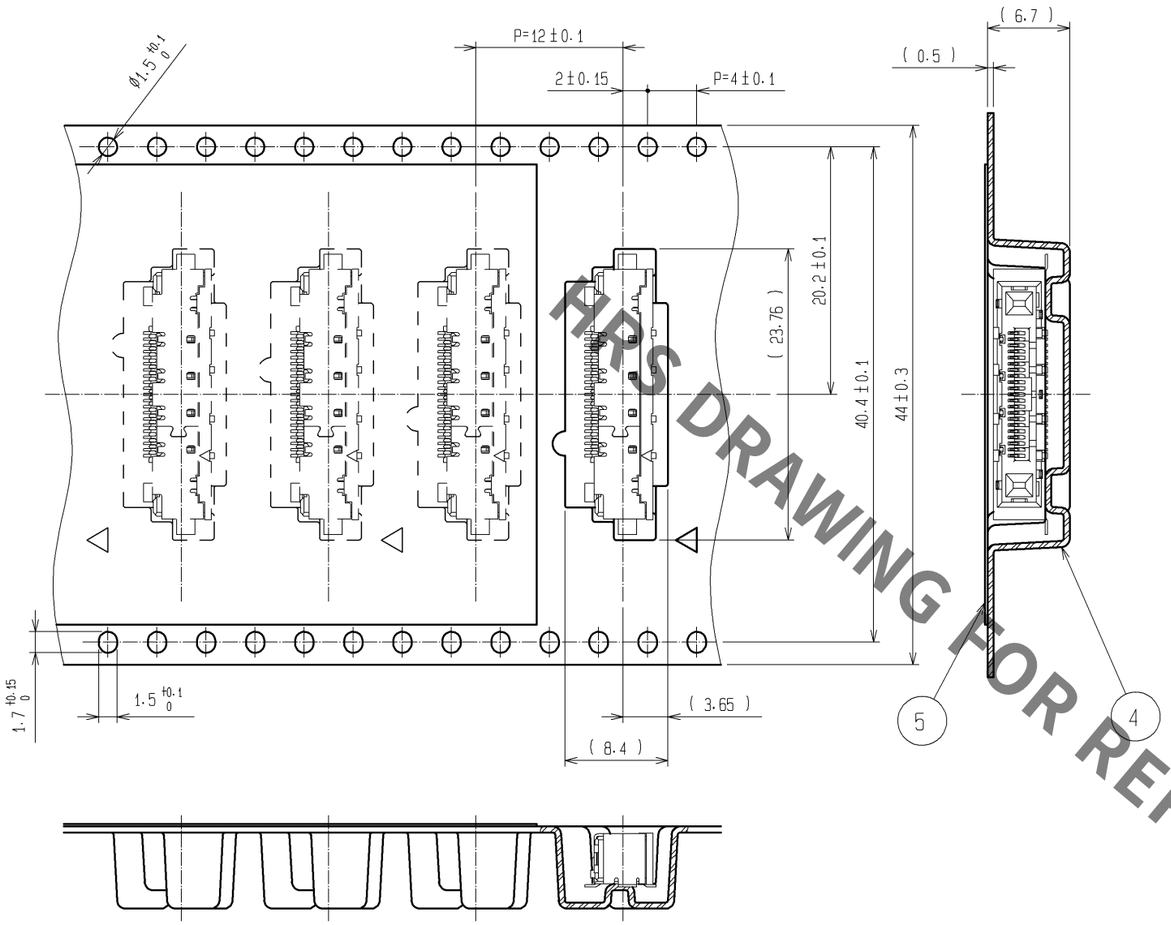

REELED DIMENSION (FREE)

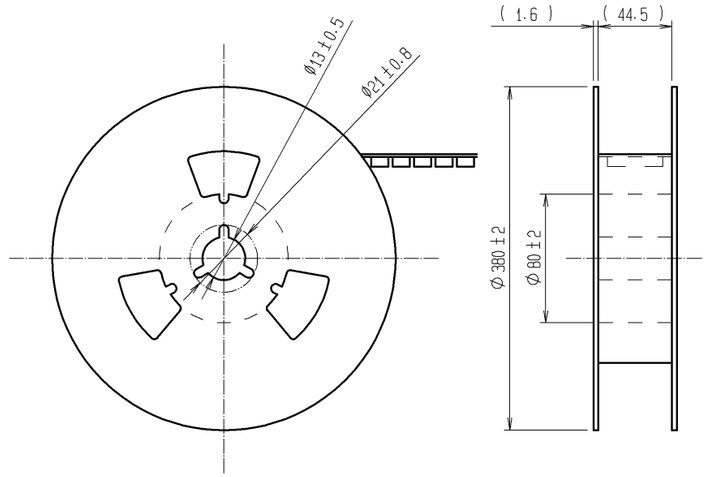

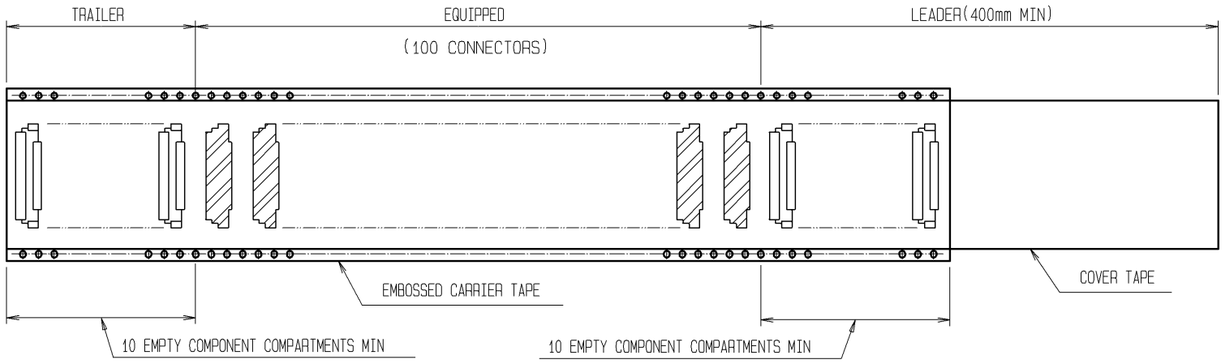

HRS DRAWING FOR REFERENCE

HRS	DRAWING NO.	EDC3-157339-02
	PART NO.	FX16-21S-0.5SH(30)
	CODE NO.	CL575-3411-5-30 △ 2/2