Jun.1.2020 Copyright 2020 HIROSE ELECTRIC CO., LTD. All Rights Reserved.
In case of consideration for using Automotive equipment / device which demand high reliability, kindly contact our sales window correspondents.

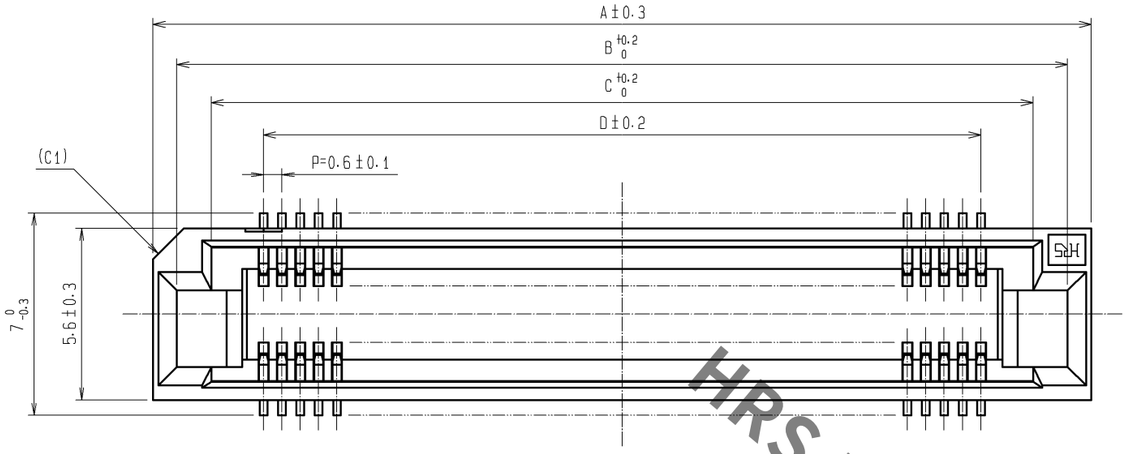

RECOMMENDED LAND PATTERN DIMENSION OF P.C.B. (MOUNTING SIDE)

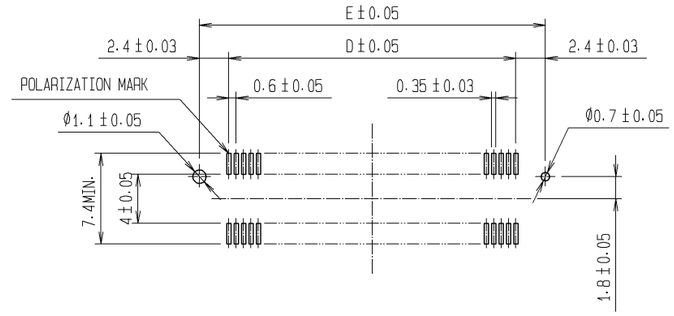

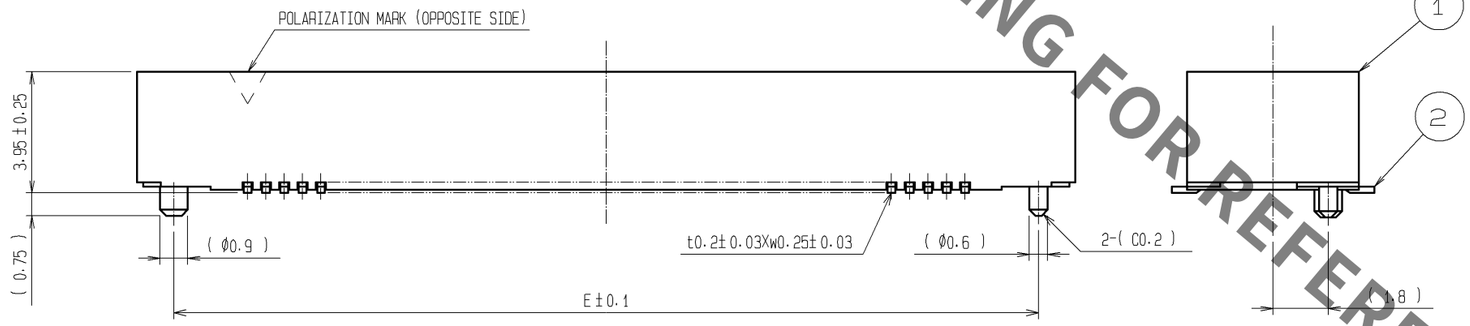

DIMENSION TABLE OF CONNECTOR AND P.C.B. LAND PATTERN.

PART No.	CODE No.	5	A	B	C	D	E
FX8C- 60S-SV(92)	CL578-0801-2-92	60	24.60	23.05	20.80	17.40	22.20
FX8C- 80S-SV(92)	CL578-0803-8-92	80	30.60	29.05	26.80	23.40	28.20
FX8C-100S-SV(92)	CL578-0805-3-92	100	36.60	35.05	32.80	29.40	34.20
FX8C-120S-SV(92)	CL578-0806-6-92	120	42.60	41.05	38.80	35.40	40.20
FX8C-140S-SV(92)	CL578-0807-9-92	140	48.60	47.05	44.80	41.40	46.20

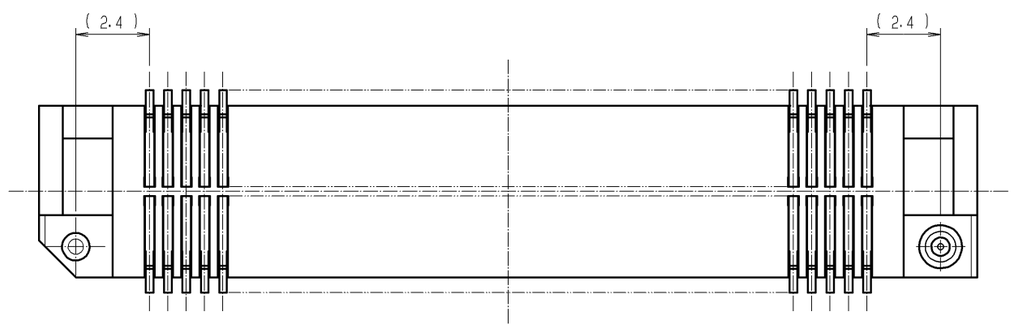

NOTE 1. LEAD CO-PLANARITY SHALL BE 0.1mm MAX.
2. EMBOSSED CARRIER TAPE PACKAGING SHALL BE APPLIED FOR THIS PRODUCT.
SEE NEXT PAGE FOR DETAILS.
3. FOR MODIFICATION, ETC., PREVENTIVE HOLE FOR SINK MARK MAY BE ADDED ACCORDING TO CIRCUMSTANCES.
4. THE DIMENSIONS IN PARENTHESES ARE FOR REFERENCE.
5 NUMBER OF CONTACTS.

NO.	MATERIAL	FINISH , REMARKS
1	PPS	LIGHT BROWN (UL94V-0)
2	PHOSPHOR BRONZE	CONTACT AREA:GOLD 0.1μm min. LEAD AREA:GOLD FLASH UNDER PLATING:NICKEL 0.5μm min.
3	PS 1	(EMBOSSED CARRIER TAPE)
4	POLYESTER	(TOP COVER TAPE)

UNITS	SCALE		COUNT	DESCRIPTION OF REVISIONS	DESIGNED	CHECKED	DATE
mm	FREE	3	1	DIS-F-006425	CR. TAKESHIMA	HT. YAMAGUCHI	12.10.15

HRS HIROSE ELECTRIC CO., LTD.

APPROVED	: KJ. KATAYOSE	05.01.05	DRAWING NO.	EDC3-151022-22
CHECKED	: HS. OKAWA	05.01.05	PART NO.	FX8C-*S-SV(92)
DESIGNED	: KT. DOI	05.01.05	CODE NO.	3 1/2
DRAWN	: KT. DOI	05.01.05		

HRS DRAWING FOR REFERENCE

Jun.1.2020 Copyright 2020 HIROSE ELECTRIC CO., LTD. All Rights Reserved.
In case of consideration for using Automotive equipment / device which demand high reliability, kindly contact our sales window correspondents.

DRAWING FOR PACKING (2:1)

UNREELING DIRECTION

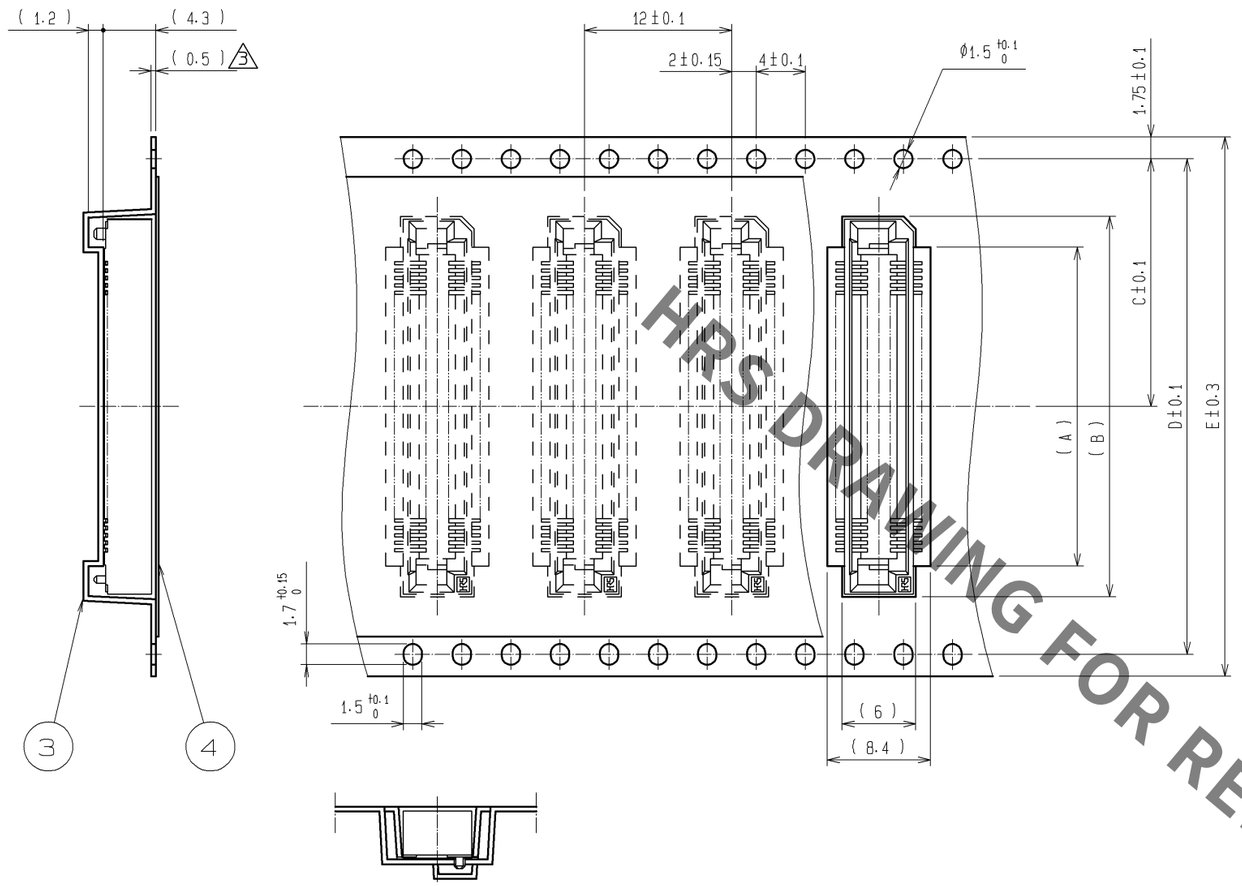

REEL DIMENSION

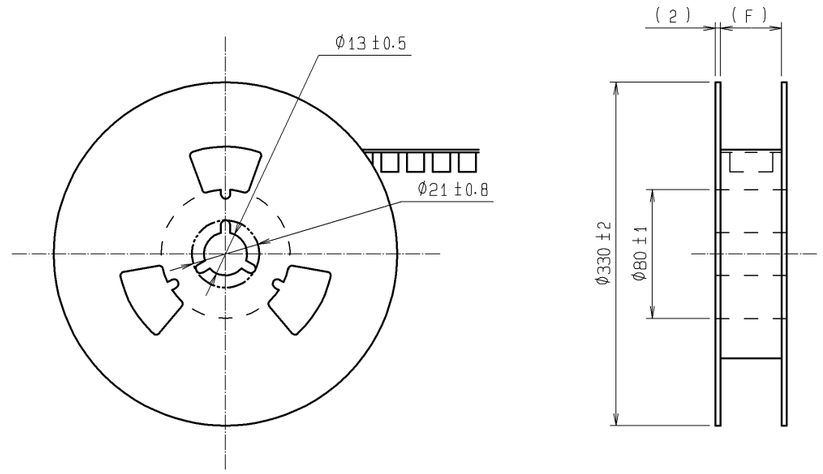

△1 DIMENSION TABLE OF EMBOSSED CARRIER TAPE AND REEL.

PART No.	CODE No.	2	A	B	C	D	E	F
FX8C- 60S-SV(92)	CL578-0801-2-92	60	20	25	20.2	40.4	44	44.4
FX8C- 80S-SV(92)	CL578-0803-8-92	80	26	31	20.2	40.4	44	44.4
FX8C-100S-SV(92)	CL578-0805-3-92	100	32	37	26.2	52.4	56	56.4
FX8C-120S-SV(92)	CL578-0806-6-92	120	38	43	26.2	52.4	56	56.4
FX8C-140S-SV(92)	CL578-0807-9-92	140	44	49	34.2	68.4	72	72.4

NOTE 1 1 REEL : 1000 CONNECTORS
2 NUMBER OF CONTACTS

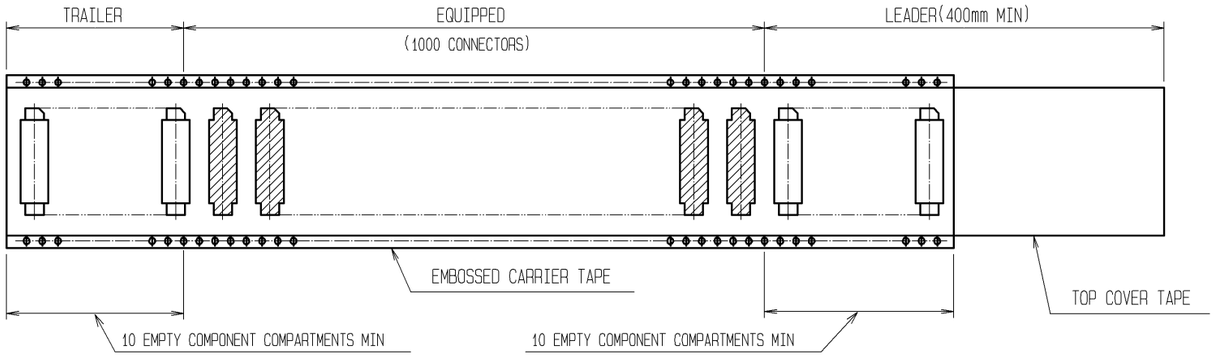

HRS DRAWING FOR REFERENCE

HRS	DRAWING NO.	EDC3-151022-22
	PART NO.	FX8C-*S-SV(92)
	CODE NO.	△3 2/2