MICRO SWITCH
FREEPORT ILLINOIS U S A
A DIVISION OF HONEYWELL
FED. MFG. CODE 91929

SWITCH-ENCLOSED

CATALOG LISTING
602EN16-6B

REPLACES X33968-EN
RELEASE NO. SR-11913
602EN16-6B
PAGE 1 OF 1
DRAWING NUMBER M
ISSUE 15

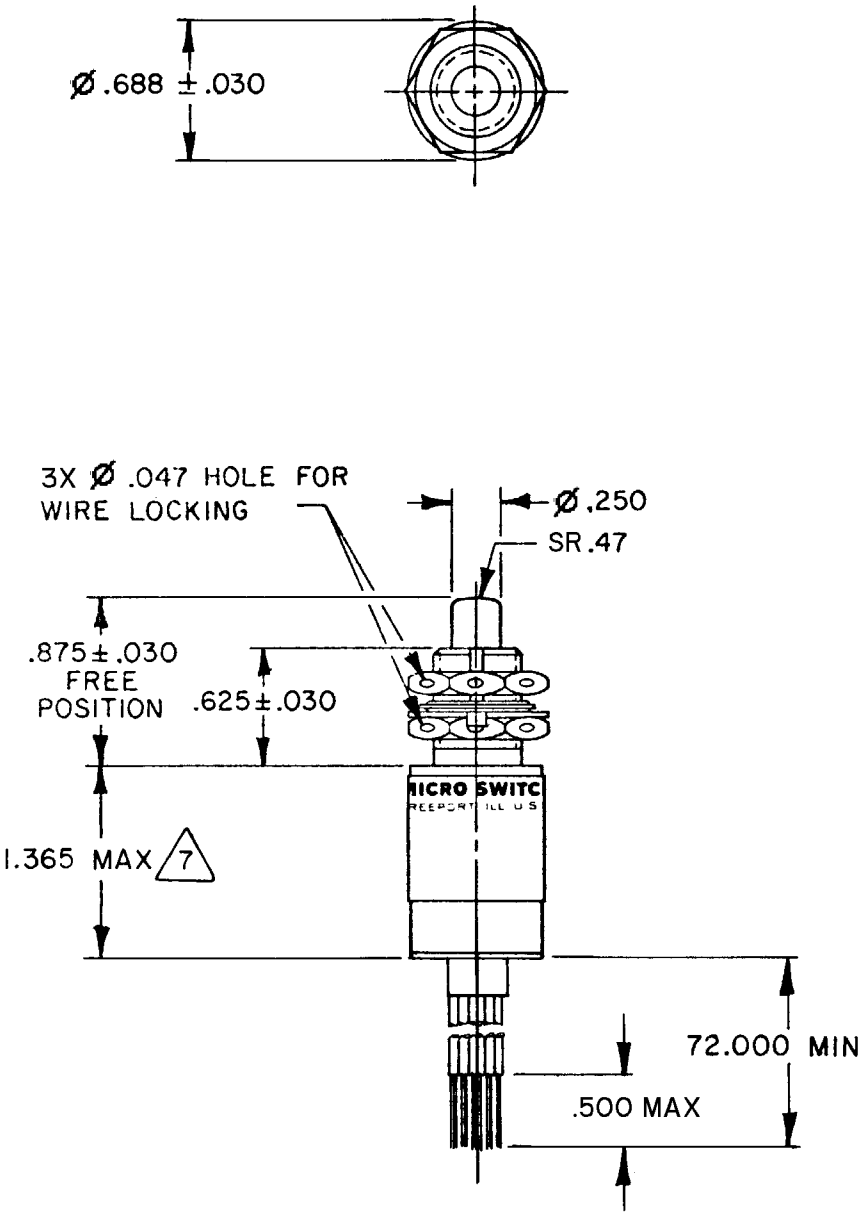

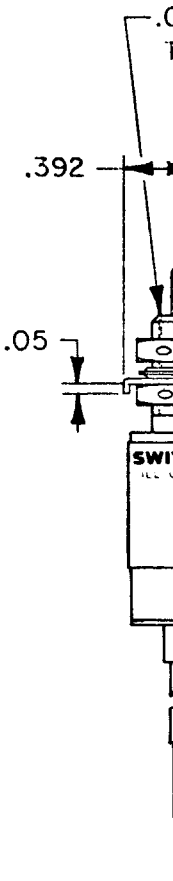

REVISIONS

A	C044351	WJM 5 MAR 80
B	C047573	J A P 7 AUG 80
C	C O 49280	JMJ 25 MAR 81
D	C0498060	KAG 28 SEP 81
E	C O 60123	S. J. S. 24 SEP 86
F	C062730	TSK 21 DEC 87
G	C094274	DLM 17 MAR 99

CHECK: CE3 7 MAR 80
CHECK
DRAWN: WJM 4 MAR 80
FORMTEK FO-52851-A

THIS DRAWING COVERS A PROPRIETARY ITEM AND IS THE PROPERTY OF MICRO SWITCH, A DIVISION OF HONEYWELL. THIS DRAWING IS NOT TO BE COPIED OR USED WITHOUT THE APPROVAL OF MICRO SWITCH.

THIRD ANGLE PROJECTION

SCALE FULL

DO NOT SCALE PRINT

CHARACTERISTICS

OPERATING FORCE	6-12 LB
FULL OVERTRAVEL FORCE	30 LB MAX
RELEASE FORCE	4 LB MIN
PRETRAVEL	.040 MAX
DIFFERENTIAL TRAVEL	.020 MAX
OVERTRAVEL	.125 MIN

ELECTRICAL DATA

CONTACT ARRANGEMENT
2X S P D T

LOAD	28 VDC	
	SEA LEVEL	50,000 FT.
RES	7	7
IND	4	2.5
MOTOR	4	
LAMP		

TOLERANCES
APPLY TO DESIGN UNITS. CONVERSIONS ARE O
REFERENCE. UNLESS NOTED, TOLERANCES A

	DIM. mm	TOL. mm/in	DIM. in
NO PLACES	X	1/.04	
ONE PLACE	X.X	0.4/.016	X.X
TWO PLACES	X.XX	0.15/.006	X.XX
THREE PLACES			X.XXX
ANGLES			

DESIGN UNITS: SI METRIC ☐ US CU ■

RAW MATERIAL-COMMERCIAL STANDA
MICRO SWITCH STANDARDS APPLY
DIMENSIONS ARE TO BE MET BEFORE
PROTECTIVE COATINGS ARE APPLIED

WEIGHT 6.2 OZ MAX

Downloaded from Arrow.com.