Distributed by:

JAMECO® ELECTRONICS

www.Jameco.com ✦ 1-800-831-4242

The content and copyrights of the attached material are the property of its owner.

Jameco Part Number 1591695

OFFSET LEG

6-32

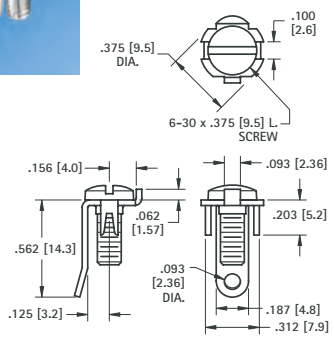

Mounting Detail

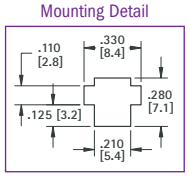

SPECIFICATIONS
Terminal: .032 (.81) thick Steel, Tin Plate
Screw: Steel, Nickel Plate
(Screw Installed & Captivated)

CAT. NO. 1248

STRAIGHT LEG

6-32

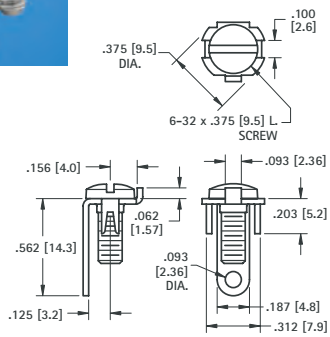

Mounting Detail

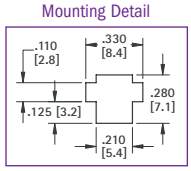

SPECIFICATIONS
Terminal: .032 (.81) thick Steel, Tin Plate
Screw: Steel, Nickel Plate
(Screw Installed & Captivated)

CAT. NO. 1215

SOLDER TAB

6-32

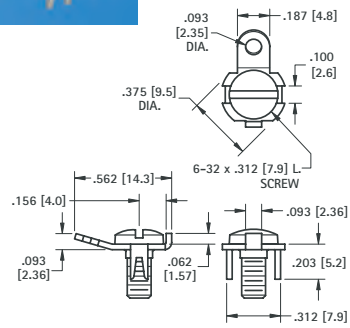

Mounting Detail

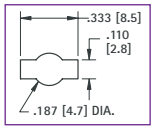

SPECIFICATIONS
Terminal: .032 (.81) thick Steel, Tin Plate
Screw: Steel, Nickel Plate
(Screw Installed & Captivated)

CAT. NO. 1232

SNAP-FIT SCREW TERMINALS

SOLDER

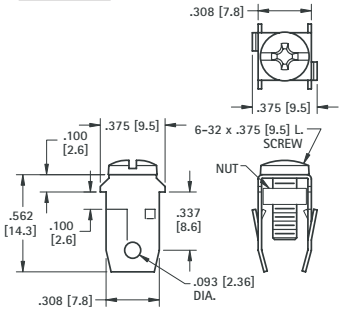

SPECIFICATIONS
Terminal: .020 (.51) thick Spring Steel, Tin Plate
Screw: Steel, Zinc Plate,
(Screw Installed & Captivated)

CAT. NO. 1272

Mounting Detail

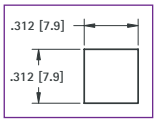

.187 (9.8) QUICK-FIT

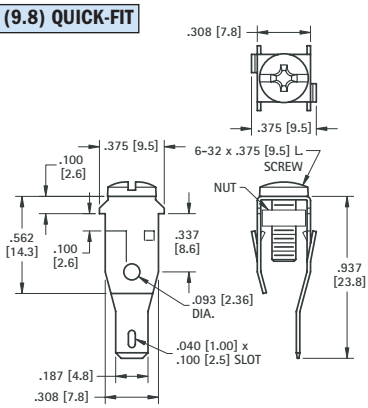

SPECIFICATIONS
Terminal: .020 (.51) thick Spring Steel, Tin Plate
Screw: Steel, Zinc Plate,
(Screw Installed & Captivated)

CAT. NO. 1273

BINDING POST TERMINALS (RIVET TYPE)

4-40

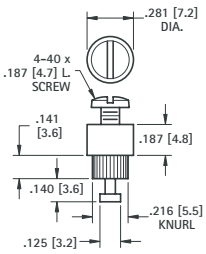

FOR .093 (2.38) BOARD

SPECIFICATIONS
Terminal: Brass, Tin Plate
Screw: Steel, Zinc Plate
(Screw Supplied Unassembled)
Mounting Hole: .220 (5.6)

CAT. NO. 1537

6-32

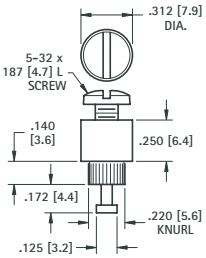

FOR .093 (2.38) BOARD

SPECIFICATIONS
Terminal: Brass, Tin Plate
Screw: Steel, Zinc Plate
(Screw Supplied Unassembled)
Mounting Hole: .225 (5.7)

CAT. NO. 1535

8-32

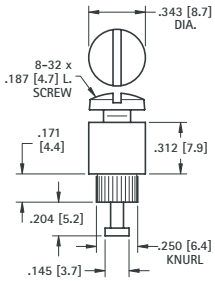

FOR .125 (3.2) BOARD

SPECIFICATIONS
Terminal: Brass, Tin Plate
Screw: Steel, Zinc Plate
(Screw Supplied Unassembled)
Mounting Hole: .255 (6.5)

CAT. NO. 1536

MINI BINDING POST

M2.5

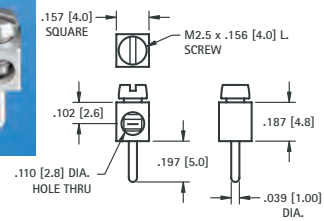

SPECIFICATIONS
Terminal: Brass, Tin Plate
Screw: Steel, Zinc Plate
(Screw Installed)
Mounting Hole: .047 (1.2)

CAT. NO. 8730