DATE	DESCRIPTION	REV.
10.08.13	CHANGE AS PER ECN 13–091	A

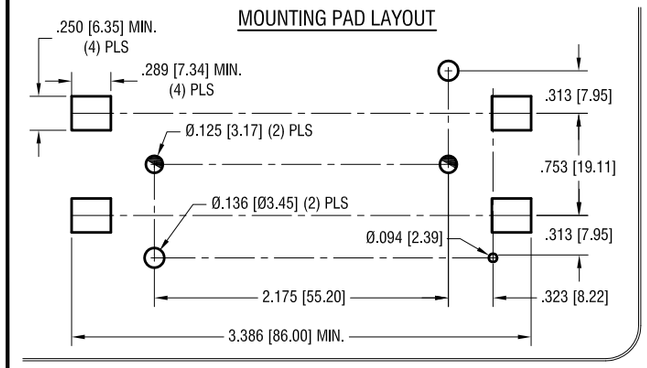

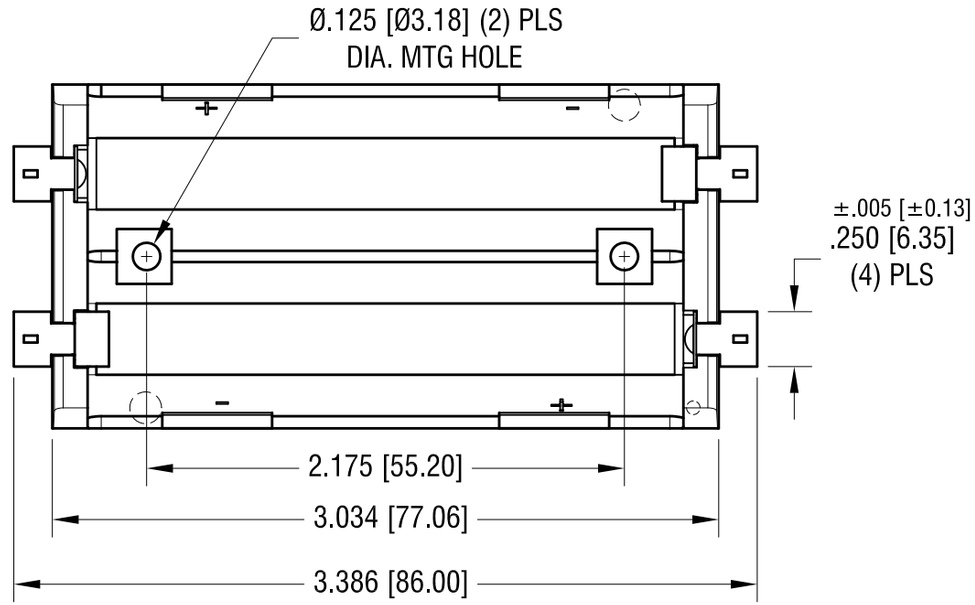

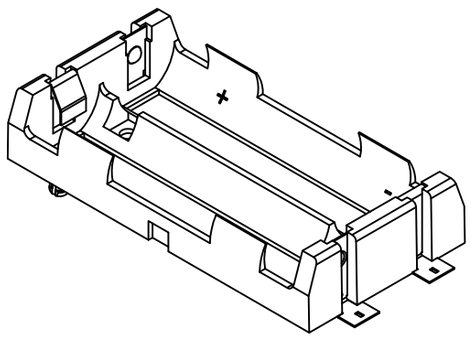

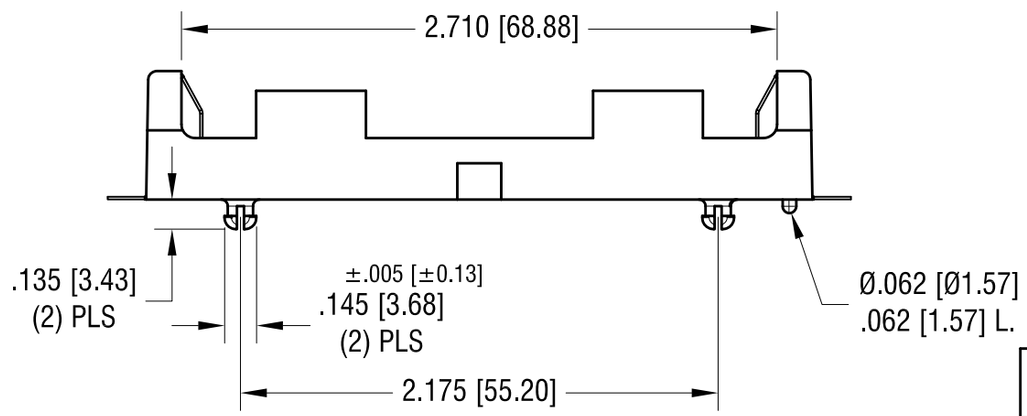

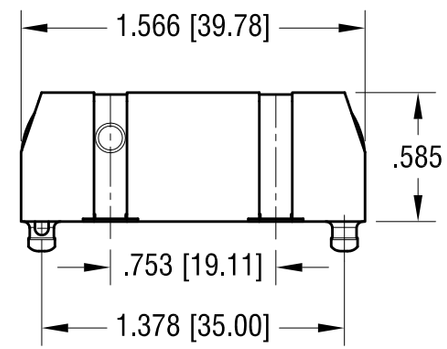

NOTE:

1. BASE:
   MAT'L: HEAT RESISTANCE NYLON
   STANYL 46 OR EQUIVALENT
2. CONTACT:
   MAT'L: .012 [0.30] THK STAINLESS STEEL
   FINISH: GOLD FLASH, OVER NICKEL PLATE
3. HOLDER DESIGNED FOR LONGER BATTERIES
   WITH BUILD IN CIRCUIT PROTECTION

THIS DOCUMENT IS THE PROPERTY OF KEYSTONE ELECTRONICS CORP. AND SHALL NOT BE REPRODUCED, DISTRIBUTED OR USED AS A BASIS FOR MANUFACTURE WITHOUT PRIOR WRITTEN PERMISSION FROM KEYSTONE ELECTRONICS CORP.

KEYSTONE ELECTRONICS CORP.
www.keyelco.com • ASTORIA, N.Y. 11105-2017 • Tel (718) 956-8900

PART NAME	DUAL SM POLARIZED HOLDER		
MATERIAL	AS NOTED		
FINISH	AS NOTED	DRN BY NT	DATE 7.12.13
		APP'D RH	SCALE 1.25X
TOLERANCES INCH [MM] DECIMAL ± .010 [± 0.25] ANGULAR ± 1° UNLESS OTHERWISE SPECIFIED	CODE C	DWG NO. 1048P	