FG-3742-D36
SHT 1.1

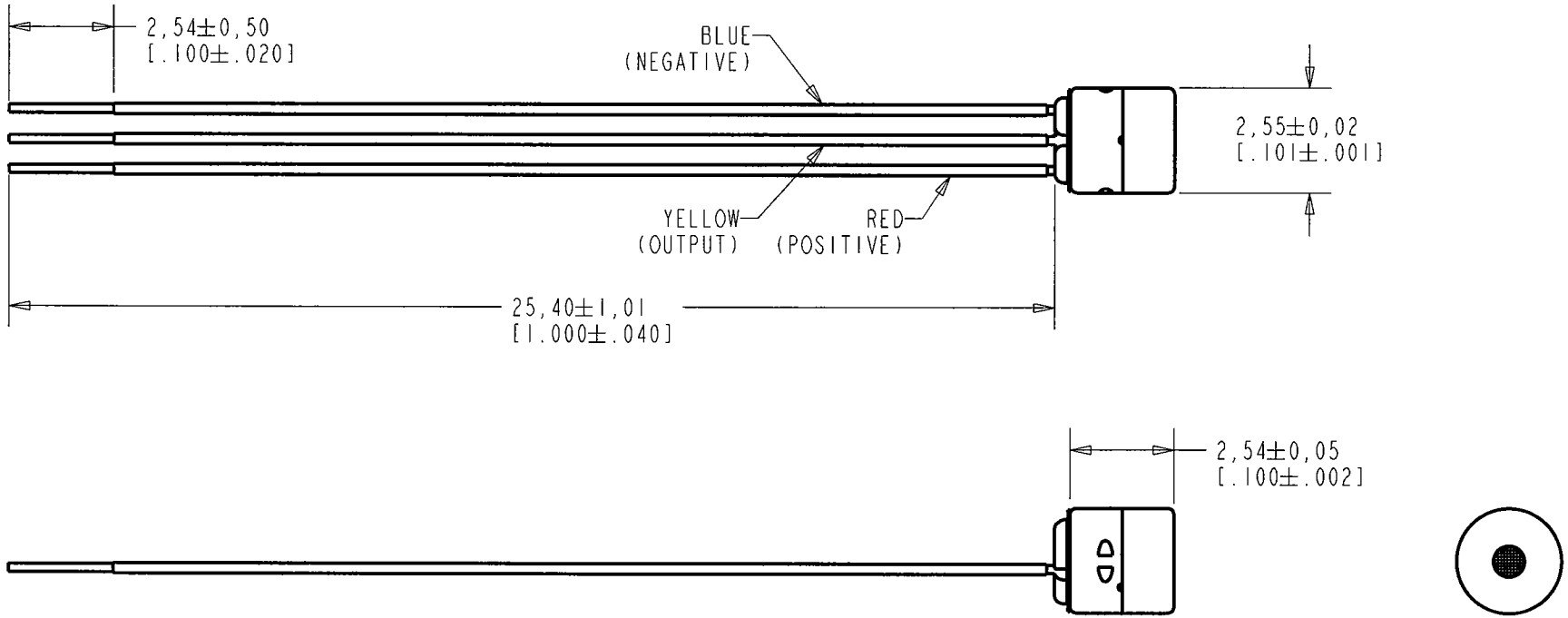


DIMENSIONS IN MILLIMETERS [INCHES]

| Revision | C.O. # | Implementation Date | RELEASE LEVEL | REVISION |
|---|---|---|---|---|
| | | | Released | A |
| A | A10100759 | 2-27-04 | | |

KNOWLES ELECTRONICS
ITASCA, ILLINOIS U.S.A.
RED CONTROLLED

SCALE: 8:1
DO NOT SCALE DRAWING

TITLE: MICROPHONE/CABLE
OUTLINE DRAWING

FG-3742-D36
SHT 1.1

| DR. BY | DATE |
|---|---|
| MMM | 11-5-03 |
| CK. BY | DATE |
| GJP | 3-2-04 |
| APP. BY | DATE |
| GJP | 3-2-04 |

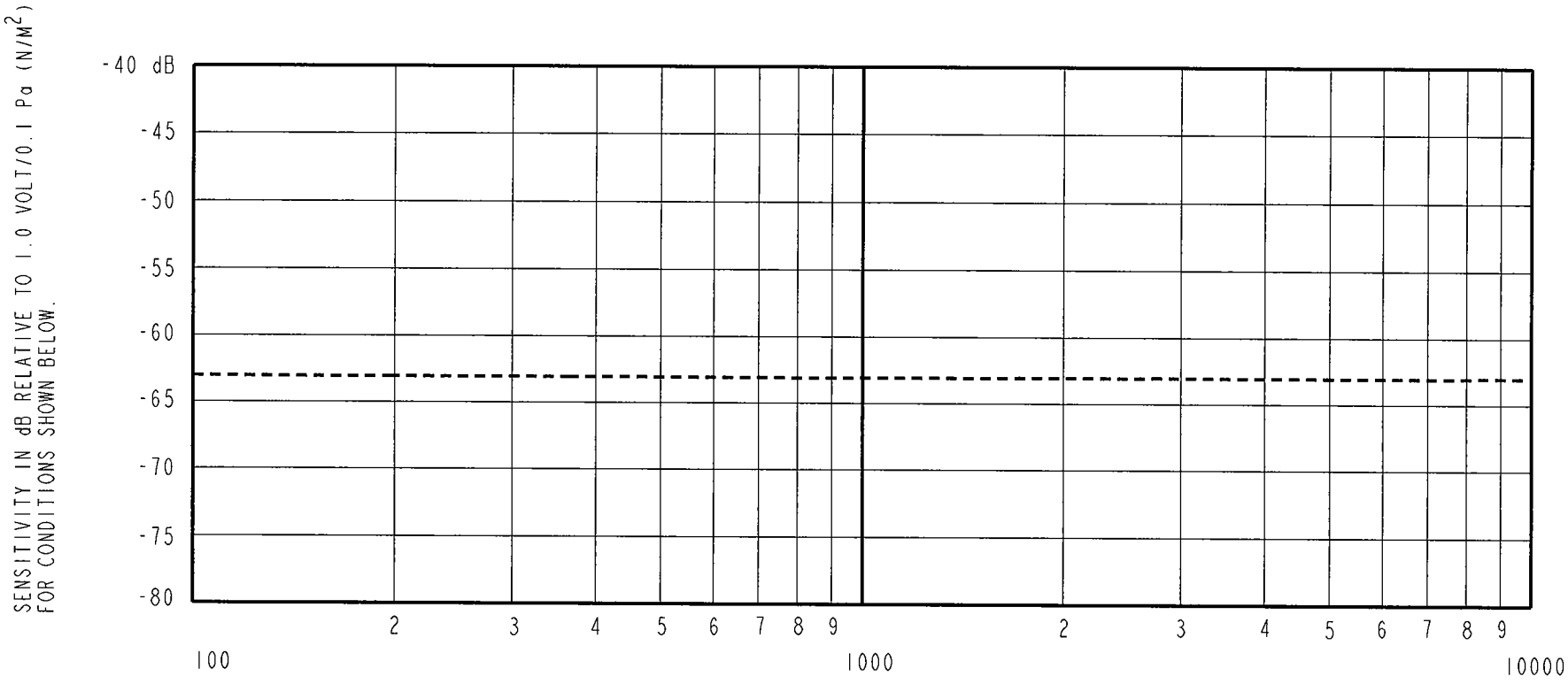


SENSITIVITY

| FREQUENCY | MIN. | NOM. | MAX. |
|---|---|---|---|
| 100 | --- | -63.0 | --- |
| 1000 | -66.0 | -63.0 | -60.0 |
| 10000 | --- | -63.0 | --- |

DEVICE CONFORMITY

| RANGE OF DEVIATION FROM 1KHz | |
|---|---|
| -3.0 | +3.0 |
| 0.0 | 0.0 |
| -3.0 | +3.0 |

NOTES:

1. CASE CONNECTED TO NEGATIVE TERMINAL.
2. MICROPHONE TO BE FUNCTIONAL WITH 1.6 VDC SUPPLY.
3. TYPICAL SENSITIVITY TO HUMIDITY AT 1000Hz IS 0.06 dB/%RH.
4. SENSITIVITY AND NOISE VALUES INDICATED ON THIS SPECIFICATION ARE VALID AT 50% HUMIDITY.

| DC SUPPLY | AMPLIFIER CURRENT DRAIN | SENSITIVITY CHANGE ON REDUCING SUPPLY TO 0.9VDC | "A" WEIGHTED NOISE (RE 1.0 VOLT) | OUTPUT IMPEDANCE OHMS | | | CAPACITANCE ±50% | |
|---|---|---|---|---|---|---|---|---|
| | | | | MIN. | NOM. | MAX. | 1-2 | 1-3 |
| 1.3V | 50μA MAX. | 3 dB MAX. | 30.0 dB MAX. | 2800 | 4400 | 6800 | 33pF | 33pF |

| Revision | C.O. # | Implementation Date | RELEASE LEVEL | REVISION |
|---|---|---|---|---|
| | | | Released | A |
| A | A10100759 | 2-27-04 | | |

KNOWLES ELECTRONICS
ITASCA, ILLINOIS U.S.A.

RED CONTROLLED

WHEN TEST LIMITS ARE USED TO ESTABLISH INCOMING INSPECTION ACCEPTANCE/REJECTION CRITERIA, CORRELATION OF TEST EQUIPMENT WITH KNOWLES IS ALSO REQUIRED FOR ELIMINATION OF EQUIPMENT AND TEST METHOD VARIATION

TITLE: MICROPHONE/CABLE
PERFORMANCE SPECIFICATION

FC-3742-D36
SHT 2.1

| DR. BY | DATE |
|---|---|
| MMM | 11-5-03 |
| CK. BY | DATE |
| GJP | 3-2-04 |
| APP. BY | DATE |
| GJP | 3-2-04 |

THIS DRAWING IS DISCLOSED IN CONFIDENCE AND IS AND SHALL REMAIN THE PROPERTY OF KNOWLES ELECTRONICS. IT SHALL NOT BE COPIED OR DUPLICATED IN ANY MANNER AND SHALL NOT BE SHOWN TO ANYONE ELSE WITHOUT WRITTEN CONSENT. IT SHALL BE USED ONLY WITH REFERENCE TO WORK UNDER CONTRACT WITH PROPOSALS SUBMITTED BY KNOWLES ELECTRONICS, INC.

FC-3742-D36

NOTES:

1. ITEM NUMBERS (SHOWN THUS ⑥) CORRESPOND WITH THOSE ON BILL OF MATERIAL.

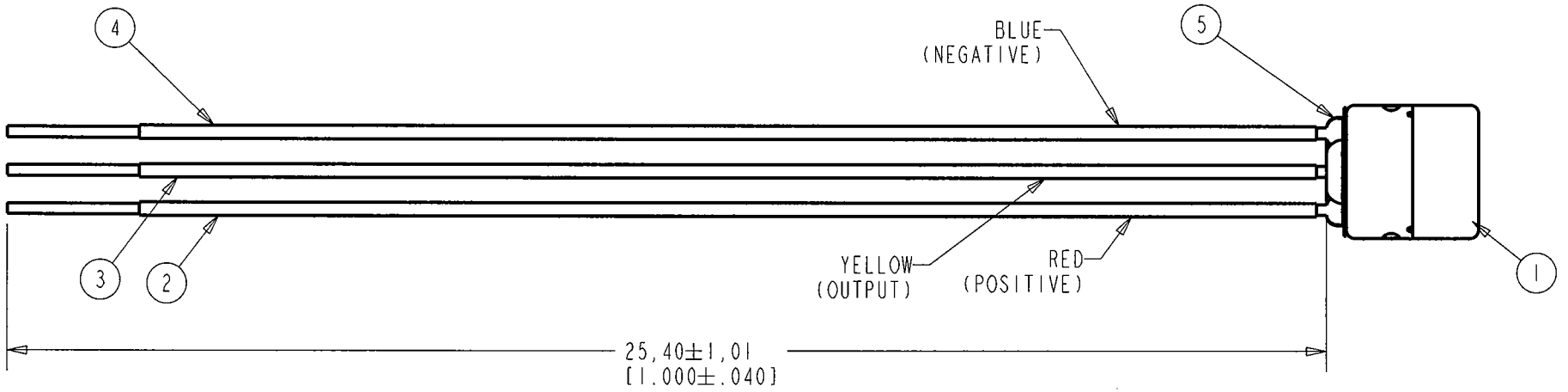


DIMENSIONS IN MILLIMETERS [INCHES]

| RELEASE LEVEL | REVISION |
|---|---|
| Released | A |

| | | | |
|---|---|---|---|
| MATERIAL SEE BILL OF MATERIAL | FINISH --- | SCALE: 8:1 | DO NOT SCALE DRAWING |

| REF. | c.o. |
|---|---|
| NONE | A10100759 |

RED CONTROLLED

UNLESS OTHERWISE SPECIFIED, DIMENSIONS ARE IN INCHES.

THIRD ANGLE PROJECTION

# KNOWLES ELECTRONICS
## ITASCA, ILLINOIS U.S.A.

| DR. BY | DATE |
|---|---|
| MMM | 11-5-03 |
| CH. BY | DATE |
| GJP | 3-2-04 |
| APP. BY | DATE |
| GJP | 3-2-04 |

TITLE

# MICROPHONE/CABLE ASSEMBLY

FC-3742-D36

SHEET 3.1

| FG-3742-D36 | KNOWLES ELECTRONICS | FG-3742-D36 |
|---|---|---|
| Sheet 4.1 | ITASCA, ILLINOIS U.S.A. | Sheet 4.1 |

| | By | Date |
|---|---|---|
| Dr. | MMM | 11-5-03 |
| Ch. | GJP | 3-2-04 |
| App. | GJP | 3-2-04 |

Subject: MICROPHONE/CABLE ASSEMBLY

Revision: A

Release Level: Released

| COL. 1 | 2 | 3 | 4 | | |
|---|---|---|---|---|---|
| Part or Dwg. no. | Tot. Req. | Nomenclature: | Applicable Specs or Remarks | Item No. | Line No. |
| FG-3742-C05 | 1 | MICROPHONE ASSEMBLY | | 1 | 1 |
| FG-035-2 | A/R | WIRE | | 2 | 2 |
| FG-035-3 | A/R | WIRE | | 3 | 3 |
| FG-035-4 | A/R | WIRE | | 4 | 4 |
| 85-007 | A/R | SOLDER | | 5 | 5 |

REVISION A c.o. A10100759

FG-3742-D36
Sheet 4.1

RED CONTROLLED