39509
GLC-LH-SM-LEG-10PK
CISCO 1000BASE-LX SFP SMF
1310NM 10KM REACH LC

GLC-LH-SM-LEG-10PK

1.25Gbps SFP Transceiver

Features

- Up to 1.25Gb/s data links
- Duplex LC connector
- Hot-pluggable SFP footprint
- 1310nm FP laser transmitter
- RoHS compliant and Lead Free
- Up to 10km on 9/125um SMF
- Metal enclosure for lower EMI
- Single +3.3V power supply
- Low power dissipation <800mW
- Commercial and industrial operating temperature optional
- SFP MSA SFF-8074i Complaint

Applications

- 1000Base-LX
- 1x Fibre Channel

Product Description

Legrand GLC-LH-SM-LEG-10PK Small Form Factor Pluggable (SFP) transceivers are compatible with the Small Form Factor Pluggable Multi-Sourcing Agreement (MSA). The SFP transceivers are high performance, cost effective modules supporting dual data-rate of 1.25Gbps/1.06Gbps and 10km transmission distance with SMF.

Legrand SFP transceivers are RoHS compliant and lead-free.

Regulatory Compliance

- ESD to the Electrical PINs: compatible with MIL-STD-883 Method 3015.
- ESD to the Duplex LC Receptacle: compatible with IEC 61000-4-2.
- Immunity compatible with IEC 61000-4-3.
- EMI compatible with FCC Part 15 Class B EN55022 Class B (CISPR 22B) VCCI Class B.
- Laser Eye Safety compatible with FDA 21CFR 1040.10 and 1040.11 EN60950, EN (IEC) 60825-1,2.
- RoHs compliant with 2002/95/EC 4.1&4.2 2005/747/EC.

Downloaded from Arrow.com.

Pin Descriptions

Pin	Symbol	Name/Descriptions	Ref.
1	VeeT	Transmitter Ground (Common with Receiver Ground)	1
2	TX Fault	Transmitter Fault.	
3	TX Disable	Transmitter Disable. Laser output disabled on high or open.	2
4	MOD DEF (2)	Module Definition 2. Data line for Serial ID.	3
5	MOD_DEF (1)	Module Definition 1. Clock line for Serial ID.	3
6	MOD_DEF (0)	Module Definition 0. Grounded within the module.	3
7	Rate Select	No connection required.	
8	LOS	Loss of Signal indication. Logic 0 indicates normal operation.	4
9	VeeR	Receiver Ground (Common with Transmitter Ground)	1
10	VeeR	Receiver Ground (Common with Transmitter Ground)	1
11	VeeR	Receiver Ground (Common with Transmitter Ground)	1
12	RD-	Receiver Inverted DATA out. AC Coupled.	
13	RD+	Receiver Non-inverted DATA out. AC Coupled.	
14	VeeR	Receiver Ground (Common with Transmitter Ground)	1
15	VccR	Receiver Power Supply.	
16	VccT	Transmitter Power Supply.	
17	VeeT	Transmitter Ground (Common with Receiver Ground)	1
18	TD+	Transmitter Non-Inverted DATA in. AC Coupled.	
19	TD-	Transmitter Inverted DATA in. AC Coupled.	
20	VeeT	Transmitter Ground (Common with Receiver Ground)	1

Notes:

1. Circuit ground is internally isolated from chassis ground.
2. Laser output disabled on TX Disable >2.0V or open, enabled on TX Disable <0.8V.
3. Should be pulled up with 4.7k-10kohms on host board to a voltage between 2.0V and 3.6V. MOD_DEF (0) pulls line low to indicate module is plugged in.
4. LOS is open collector output. Should be pulled up with 4.7k-10kohms on host board to a voltage between 2.0V and 3.6V. Logic 0 indicates normal operation; logic 1 indicates loss of signal.

Downloaded from Arrow.com.

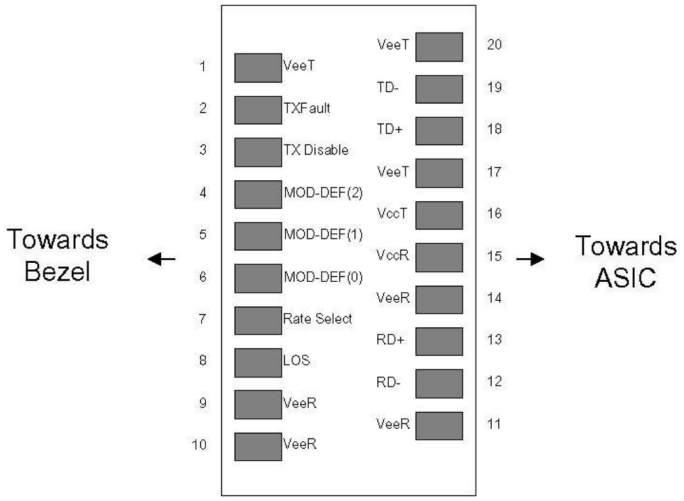

Pin-out of connector Block on Host board

Recommend Circuit Schematic

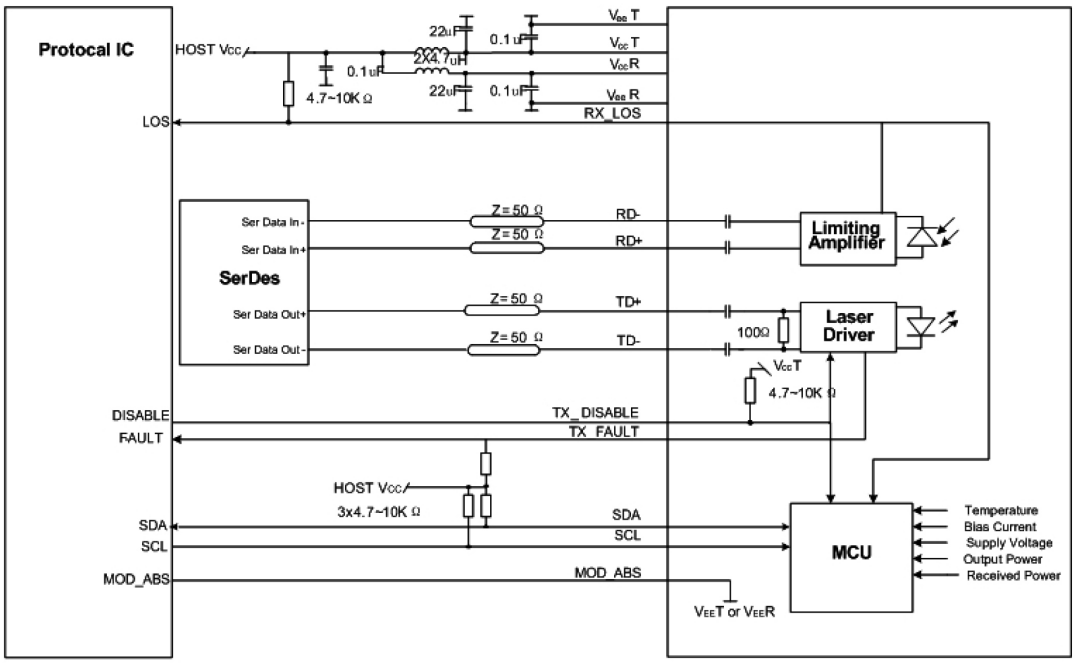

Absolute Maximum Ratings

Parameter	Symbol	Min.	Max.	Unit
Maximum Supply Voltage	Vcc	-0.5	4.0	V
Storage Temperature	TS	-40	85	°C
Operating Humidity	RH	5	95	%

Downloaded from Arrow.com.

Recommended Operating Conditions

Parameter	Symbol	Min.	Typ.	Max.	Unit
Power Supply Voltage	Vcc	3.13	3.30	3.47	V
Power Supply Current	Icc			250	mA
Case Operating Temperature – Commercial	Tc	0		70	°C
Case Operating Temperature – Industrial	Ti	-40		85	°C
Data Rate (Gigabit Ethernet)			1.25		Gbps
Data Rate (Fibre Channel)			1.063		Gbps
9/125µm G.652 SMF	Lmax			10	km

Electrical Characteristics (TOP=25°C, Vcc=3.3V)

Parameter	Symbol	Min.	Typ.	Max.	Unit	Notes
Transmitter						
Input differential impedance	Rin		100		Ω	1
Single ended data input swing	Vin, pp	250		1200	mV	
TX Disable-High		Vcc-1.3		Vcc	V	
TX Disable-Low		Vee		Vee+0.8	V	
TX Fault-High		Vcc-0.5		Vcc	V	
TX Fault-Low		Vee		Vee+0.5	V	
Receiver						
Single ended data output swing	Vout, pp	300	400	800	mV	2
Data output rise time	tr			175	ps	3
Data output fall time	tf			175	ps	3
LOS-High		Vcc-0.5		Vcc	V	
LOS-Low		Vee		Vee+0.5	V	

Notes:

1. AC coupled.
2. Into 100 ohm differential termination.
3. 20% - 80%

Downloaded from Arrow.com.

Optical and Electrical Characteristics

Parameter	Symbol	Min.	Typ.	Max.	Unit	Notes
Transmitter						
Output Opt. Power	PO	-9.5		-3	dBm	1
Optical Wavelength	λ	1275	1310	1350	nm	
Spectral Width	σ			3	nm	
Optical Rise/Fall Time	tr/tf			260	ps	2
Total Jitter	TJ			200	ps	
Optical Extinction Ratio	ER	9			dB	
Receiver						
RX Sensitivity @1.25 Gb/s	RSENS			-21	dBm	3,4
Maximum Received Power	RX_{MAX}	-3			dBm	
Optical Center Wavelength	λC	1270		1600	nm	
LOS De-Assert	LOSD			-22	dBm	
LOS Assert	LOSA	-42			dBm	
LOS Hysteresis		0.5		5	dB	

Notes:

1. Class 1 Laser Safety.
2. Unfiltered, 20%-80%. Complies with GE and 1x FC eye masks when filtered.
3. Measured with conformance signals defined in FC-PI-2 Rev. 10.0 specifications.
4. Measured with PRBS 2^7-1 at 10^{-10} BER.

Mechanical Specifications

Small Form Factor Pluggable (SFP) transceivers are compatible with the dimensions defined by the SFP Multi-Sourcing Agreement (MSA).

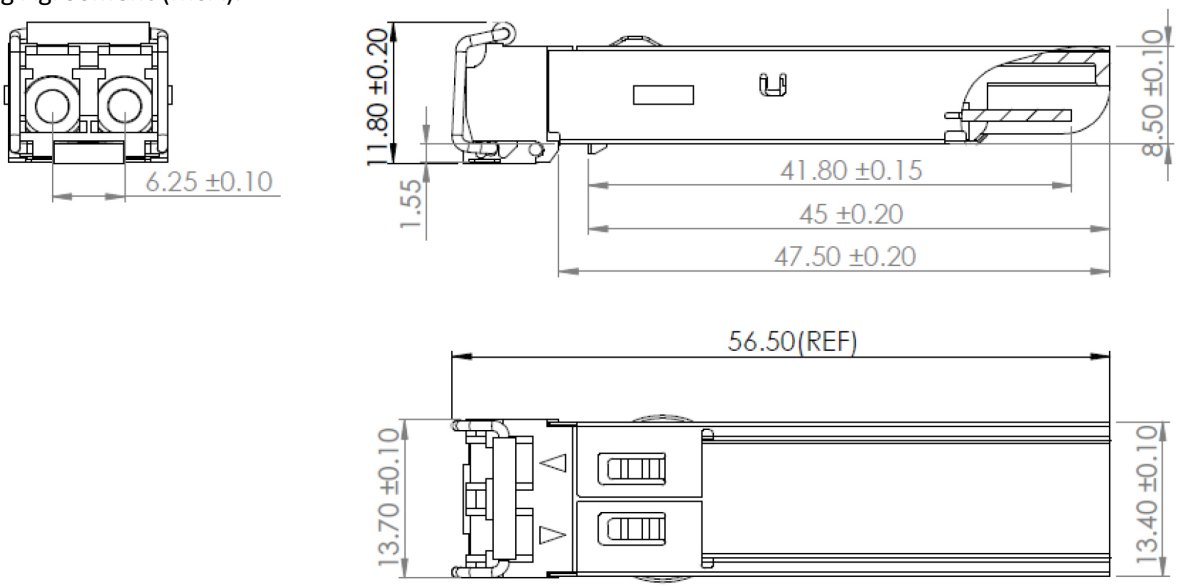

Downloaded from Arrow.com.

EEPROM Information

EEPROM memory map specific data field description is as below:

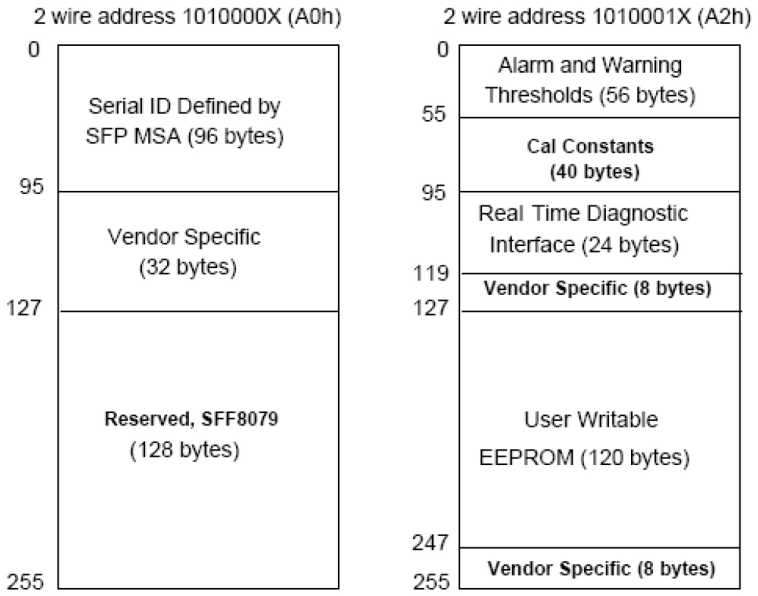

Downloaded from Arrow.com.