UNCONTROLLED DOCUMENT

PART NUMBER	REV.
LCD–A2X1C50TR	–

REV.	E.C.N. NUMBER AND REVISION COMMENTS	DATE

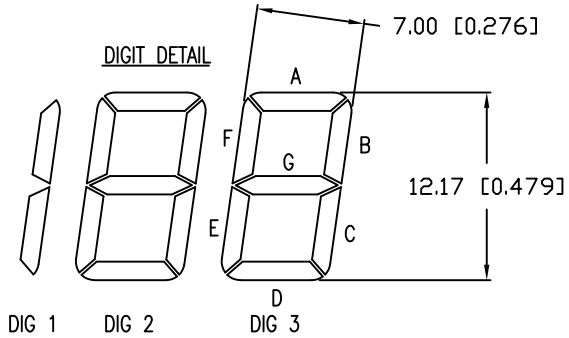

PIN NO.	1	2	3	4	5	6	7	8
SEGMENT	1BC	3F	3G	3E	3D	3C	3B	3A
PIN NO.	9	10	11	12	13	14	15	16
SEGMENT	2C	2B	2A	2F	2G	2E	2D	COM

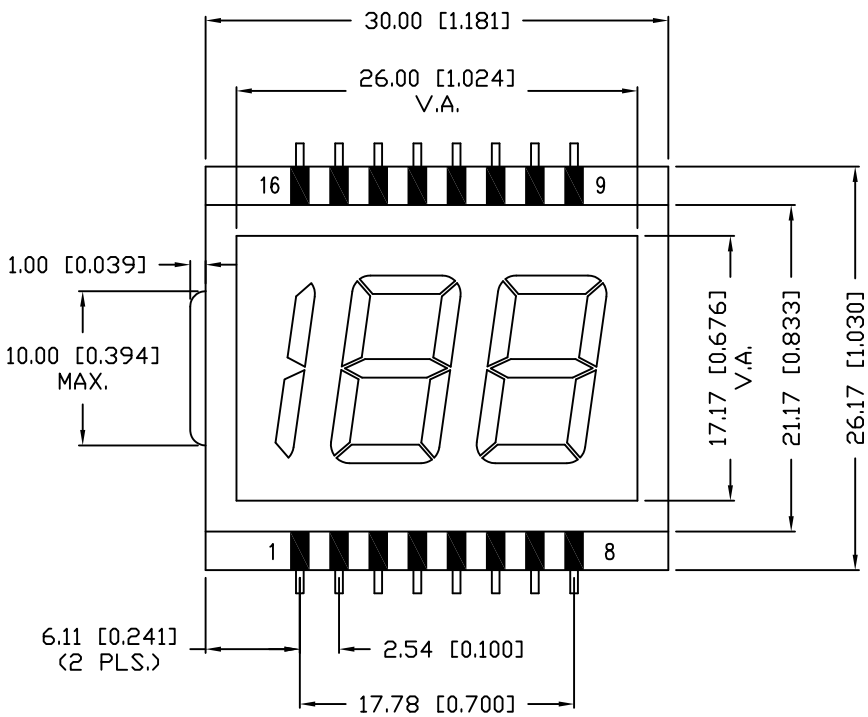

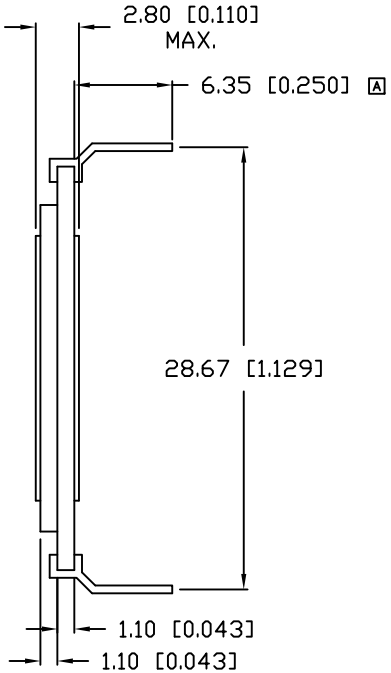

CHARACTERISTICS	
FLUID TYPE:	TN
BACKGROUND COLOR:	GRAY
VIEWING DIRECTION:	6:00
DISPLAY MODE:	REFLECTIVE
OPERATING VOLTAGE:	5.0V A.C.
OPERATING TEMP.	–40°C TO 105°C
STORAGE TEMP.	–40°C TO 105°C
DRIVING METHOD:	STATIC
CONNECTION TYPE:	16 PINS

B

UNCONTROLLED DOCUMENT

*UNLESS OTHERWISE SPECIFIED TOLERANCES PER DECIMAL PRECISION ARE: X=±1 (±0.039), X.X=±0.5 (±0.020), X.XX=±0.25 (±0.010), X.XXX=±0.127 (±0.005). LEAD SIZE=±0.05 (±0.002), LEAD LENGTH=±0.75 (±0.030). MIN= +DECIMAL PRECISION −0.00 MAX.= +0.00 −DECIMAL PRECISION

REV.	PART NUMBER
–	LCD–A2X1C50TR

0.50" CHARACTER HEIGHT, 2 1/2 DIGIT LCD GLASS, TN, REFLECTIVE, 16 PINS.

CONFIDENTIAL INFORMATION
THE INFORMATION CONTAINED IN THIS DOCUMENT IS THE PROPERTY OF LUMEX INC. EXCEPT AS SPECIFICALLY AUTHORIZED IN WRITING BY LUMEX INC., THE HOLDER OF THIS DOCUMENT SHALL KEEP ALL INFORMATION CONTAINED HEREIN CONFIDENTIAL AND SHALL PROTECT SAME IN WHOLE OR IN PART FROM DISCLOSURE AND DISSEMINATION TO ALL THIRD PARTIES.

RELIABILITY NOTE
OUR MANY YEARS OF EXPERIENCE DATA ACCUMULATION INDICATE THAT SOLDER HEAT IS A MAJOR CAUSE OF EARLY AND FUTURE FAILURE. PLEASE PAY ATTENTION TO YOUR SOLDERING PROCESS.

LUMEX®
Creating LED and LCD Solutions Together™

425 N. GARY AVE.
CAROL STREAM, IL 60188–4900
PHONE: +1.800.278.5666
FAX: +1.630.315.2152
WEB: WWW.ITWECS.COM

A

DRAWN BY:	CHECKED BY:	APPROVED BY:	DATE: 12.9.98
RU	YA	YA	PAGE: 1 OF 1
			SCALE: N/A