Date	SYM	REVISION RECORD AUTH	DR.	CK.
07/07/04	A	Dim. 2.05 was 2.00	B.S.	T.
12/02/06	B	Added "ROHS COMPLIANT"	B.S.	T.

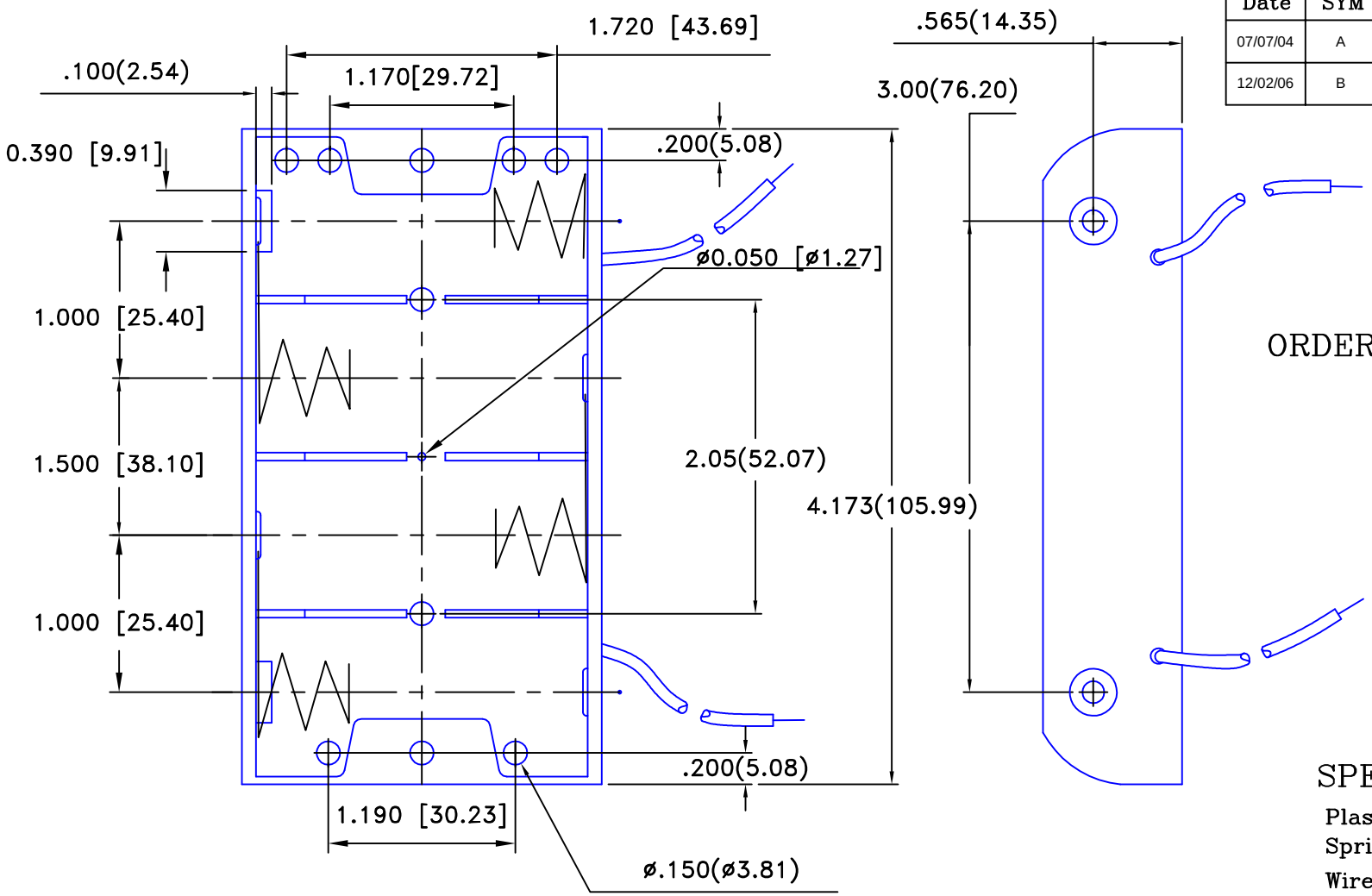

Wire Leads Shown

ORDERING CODE BH4C☐

L–Solder Lugs
W–(6") Wire Leads
SF–9Volt type snaps
B– Bump plates

SPECIFICATIONS

Plastic material– polypropylene
Springs– nickel plated spring steel
Wire– 26 AWG, UL1007, CSA
Rivets– Brass, nickel plated
9Volt snaps– Brass, nickel plated
ROHS COMPLIANT

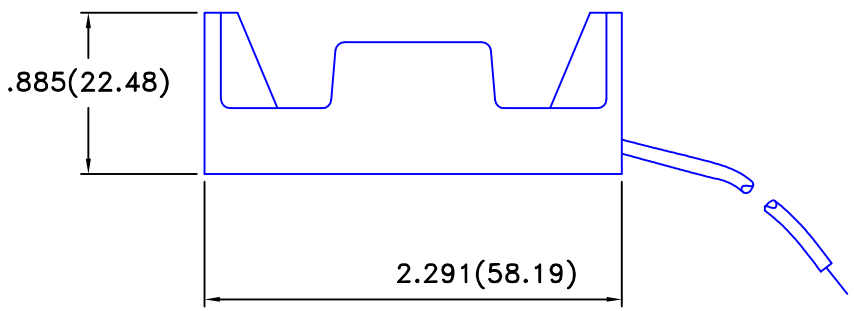

Tolerance (Except as noted)	Memory Protection Devices, Inc 200 Broad Hollow Road, Farmingdale, New York 11735		
decimal ±.5 (.020)		Scale 1.5=1	Drawn By T.S. Approved By T.B.
Fractional ± .8 (.030)	Title FOUR "C" CELL HOLDER		
Angular ± 3°	Date 12/02/06	Drawing Number BH4CW	