Downloaded from Arrow.com.

4611110025898

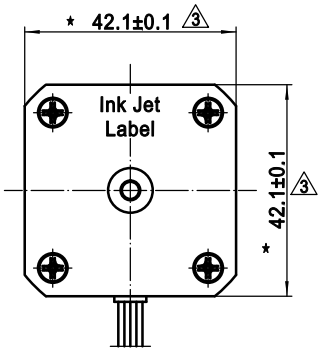

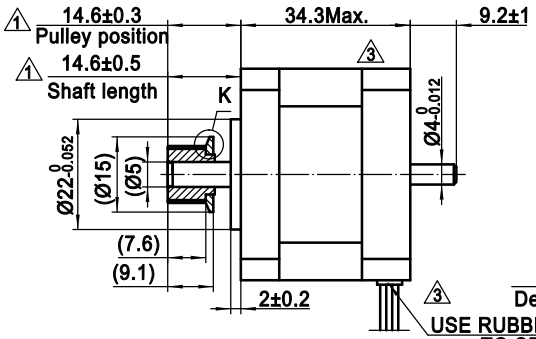

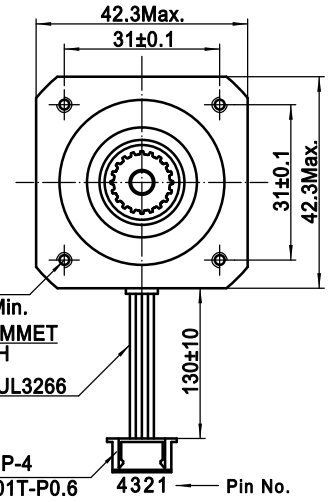

接线图 Wiring Diagram

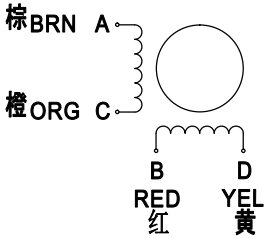

② 连接器引位vs.引线颜色

Pin No. vs. Lead Wire Colour

PIN No.	颜色 Colour
1	橙Orange
2	棕Brown
3	黄Yellow
4	红Red

③ 备注: 标注* 的尺寸为后端面往下3mm Min.

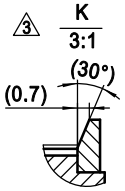

励磁顺序vs.旋转方向

Exciting Sequence vs. Direction of Rotation

STEP	A	B	C	D
1	+	+	−	−
2	−	+	+	−
3	−	−	+	+
4	+	−	−	+

CCW

CW

从安装面看为顺时针方向

Clockwise view from mouting side

规格 Specifications

1. 相数 Number of Phase	2
2. 步距角 Step Angle	0.9°
3. 额定电压 Rated Voltage	2.46V DC
4. 额定电流 Rated Current	0.6Amp
5. 保持力矩 Holding Torque	220mNm Typ.(Two phase on/rated current)
6. 相电阻 Phase Resistance	4.1ohm±10%(20°C)
7. 相电感 Phase Inductance	10.5mH±20%(1kHz 1V rms)
8. 转子惯量 Rotor Inertia	38gcm^2
9. 电机重量 Motor Weight	0.21kg
10. 绝缘等级 Insulation Class	B(130°C)

带轮规格 Pulley Specification

齿型 Profile	MXL
齿数 Number of Teeth	20
节距 Pitch	2.032
节圆 Pitch Diameter	Ø12.94
齿顶圆 Outside Diameter	Ø12.43 $^{+0.05}_{0}$
材料 Material	HPb59-1

铭牌 Label Detail

MOONS' STEPPING MOTOR
TYPE MS17HA4L4100-02
XXXXXXXX YY/MM/DD

Work Order 加工单号 — Date Format 日期格式

REV.	版本记录 REVISION RECORD	DATE
D	CNC加工: 41.7±0.1, 更改带轮法兰倒角及扩套 ③	2019.03.26
C	更改连接器引位 ②	2017.07.05
B	Pulley position13.1±0.3;Shaft length13.1±0.5 ①	2017.05.24
A	原始版本 Original revision	2017.03.10

Unit: mm
第一角画法
FIRST ANGLE METHOD
未注线性与角度尺寸公差
Tolerances for linear and angular dimensions without individual tolerance indications
GB/T 1804-m eqv ISO 2768-1□m
未注形状与位置尺寸公差
Geometrical tolerance for features without individual tolerance indications
GB/T 1184-K eqv ISO 2768-2□K

UNLESS OTHERWISE SPECIFIED

NAMES	SIGNATURE	DATE
批准 Approve		
标准化 Standard		
工艺 Technology		
审核 Check		
设计 Design	乔鹏力	2019.03.26

MOONS'

Shanghai Moons' Electric Co., Ltd.

Hybrid Stepping Motor

This ducument is released for information only. Its reproduction in whole or in part or its dissemination to third parties is prohibited. All trademarks and registered trademarks appearing on this document are the property of their respective owners.

Type: MS17HA4L4100-02 | Rev.D | SCALE 1:1 | Sheet 1 of 1