Downloaded from Arrow.com.

4611110015296

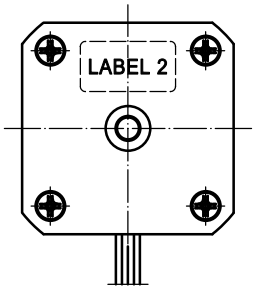

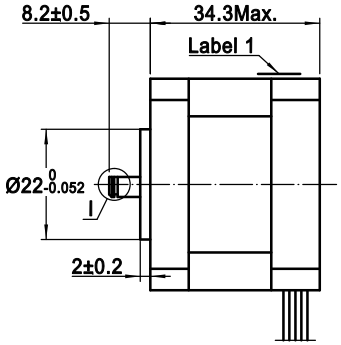

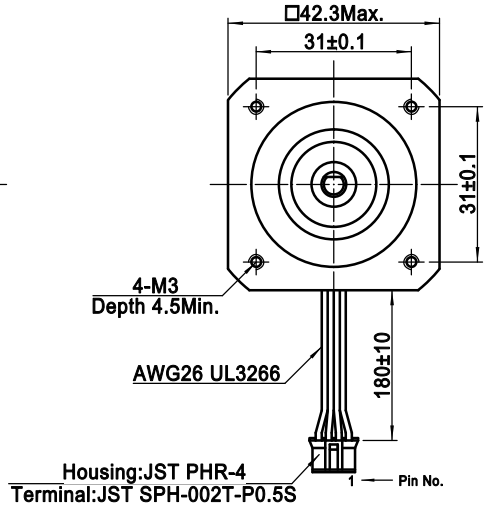

接线图 Wiring Diagram

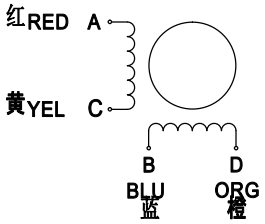

连接器引位 vs. 引线颜色 Pin No.vs.Lead Wire Colour

PIN No.	颜色Colour
1	黄YEL
2	红RED
3	蓝BLU
4	橙ORG

励磁顺序 vs. 旋转方向 Exciting Sequence vs. Direction of Rotation

STEP	A	B	C	D
1	+	+	−	−
2	−	+	+	−
3	−	−	+	+
4	+	−	−	+

CW ↓ ↑ CCW

从安装面看为顺时针方向

Clockwise view from mouting side

规格 Specifications

1. 相数 Number of Phase	2
2. 步距角 Step Angle	1.8°
3. 额定电压 Rated Voltage	3.2V DC
4. 额定电流 Rated Current	1Amp
5. 保持力矩 Holding Torque	0.305N.m Typ.(Two phase on/rated current)
6. 相电阻 Phase Resistance	3.2ohm±10%(20°C)
7. 相电感 Phase Inductance	6mH±20%(1kHz 1V rms)
8. 转子惯量 Rotor Inertia	38g.cm^2
9. 电机重量 Motor Weight	0.21kg
10. 绝缘等级 Insulation Class	B(130°C)

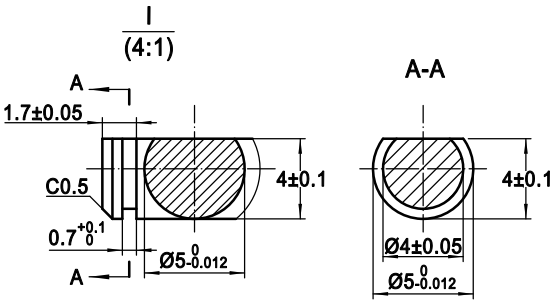

铭牌1 Label Detail

MOONS' STEPPING MOTOR
Max. Speed:3000RPM
Ambient:50°C
Ins. Class B
MOONS' ELECTRIC CO., LTD

铭牌2 Label Detail

TYPE MS17HD4L4110-03
24VDC Max. 1A 0.305N.m
XXXXXXXX YY/MM/DD

Work Order 加工单号 — Date Format 日期格式

REV.	版本记录 REVISION RECORD	DATE
A	原始版本 Original revision	2016.04.11

Unit: mm
第一角画法 FIRST ANGLE METHOD
未注线性与角度尺寸公差 Tolerances for linear and angular dimensions without individual tolerance indications GB/T 1804-m eqv ISO 2768-1□m
未注形状与位置尺寸公差 Geometrical tolerance for features without individual tolerance indications GB/T 1184-K eqv ISO 2768-2□K

UNLESS OTHERWISE SPECIFIED

	NAMES	SIGNATURE	DATE
批准 Approve			
标准化 Standard			
工艺 Technology			
审核 Check			
设计 Design	徐文彬		2016.04.11

MOONS'
Shanghai Moons' Electric Co., Ltd.

Hybrid Stepping Motor

This ducument is released for information only. Its reproduction in whole or in part or its dissemination to third parties is prohibited. All trademarks and registered trademarks appearing on this document are the property of their respective owners.

Type: MS17HD4L4110-03 | Rev.A | SCALE 1:1 | Sheet 1 of 1