Louvered Fan Guards

Filter Kits for 80mm (3.15”) & 92mm (3.62”) Fans

LFG80B Filter Kit for 80mm fan

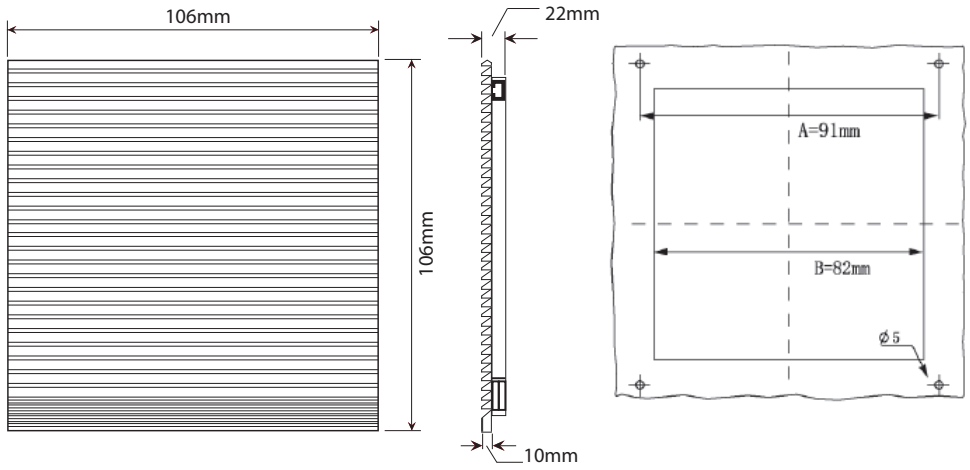

LFG92B Filter Kit for 92mm fan

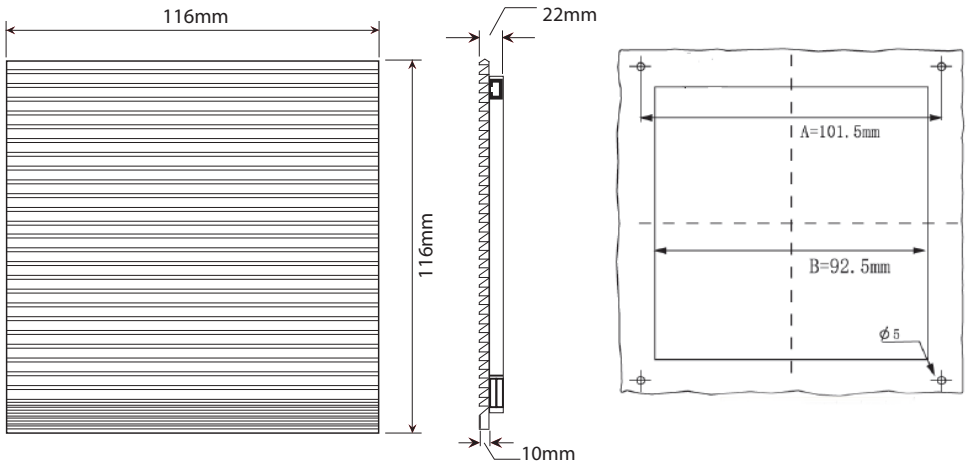

Part Number	LFG80B	LFG92B
Frame Description	ABS Resin - flame resistant UL94V-0, Vents with screens at 45-degree angle. High foam sealing edge - protection grade IP44-IP54 on LFG92 only	
Filter Mesh Material	Nylon Fiber - Synthetic Resin, filters to 8 microns.	
Color	Black is standard. Gray (RAL7035) is available on request. To specify gray remove “B” from part number. Minimums may apply.	

Installation Method

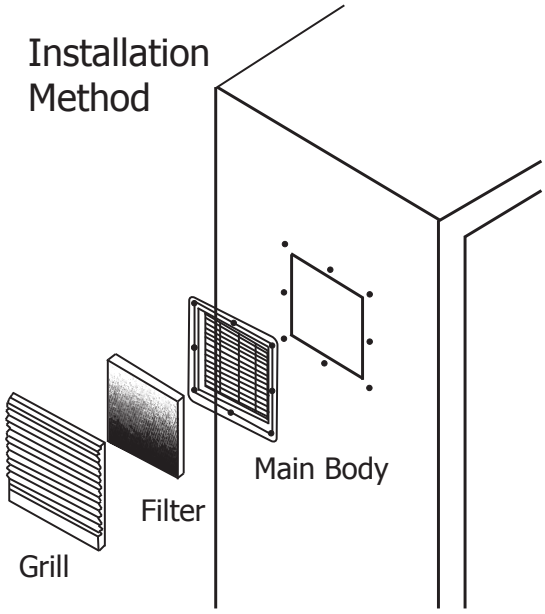

Orion Fans
10557 Metric Drive
Dallas, TX 75243
800.323.2439

www.orionfans.com

A division of Knight Electronics, information and data are subject to change without prior notification.