SPECIFICATIONS		
PARAMETERS	VALUES	UNITS
RATED INPUT POWER	0.1	W
MAX INPUT POWER	0.2	W
IMPEDANCE	8 ± 15%	OHM
OUTPUT SPL @ 0.1W/10CM (AT 1.0, 1.2, 1.5, 2.0 kHz)	88 ± 3	dBA
DISTORTION (MAX.)	10%	-
RESONANT FREQUENCY	650 ± 20%	Hz
FREQUENCY RANGE	650 ~ 4,000	Hz
HOUSING MATERIAL	ABS	-
CONE MATERIAL	TRANSPARENT POLYESTER	-
MAGNET MATERIAL	FERRITE	-
OPERATING TEMPERATURE	-20 ~ +55	°C
WEIGHT	8	grams

THIS DOCUMENT CONTAINS DATA PROPRIETARY TO PROJECTS UNLIMITED, INC. ANY USE OR REPRODUCTION, IN ANY FORM, WITHOUT PRIOR WRITTEN PERMISSION OF PROJECTS UNLIMITED, INC. IS PROHIBITED.
©2003, Projects Unlimited Inc.

REVISION HISTORY			
LTR	DESCRIPTION	DATE	APPROVED
-	RELEASED FROM ENGINEERING	9/21/2005	
A	REVISED TO INVENTOR 3-D DRAWING TEMPLATE	10/29/2008	B.R.

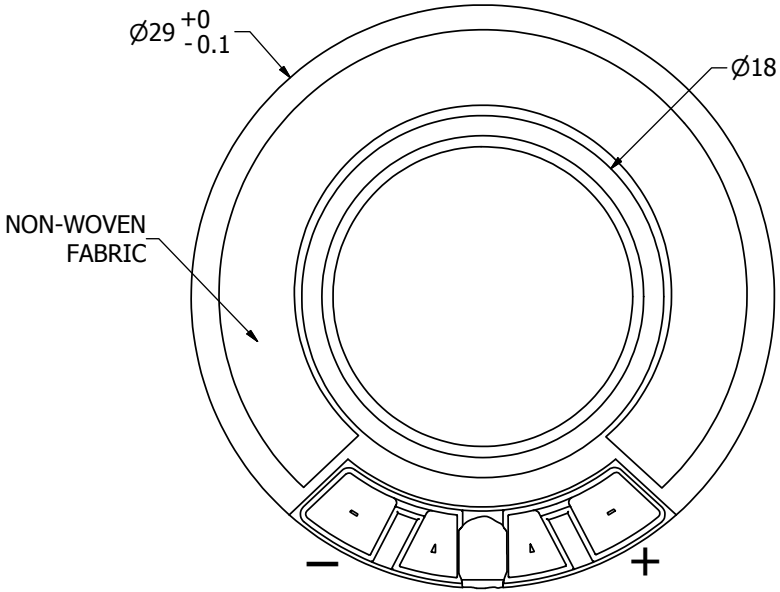

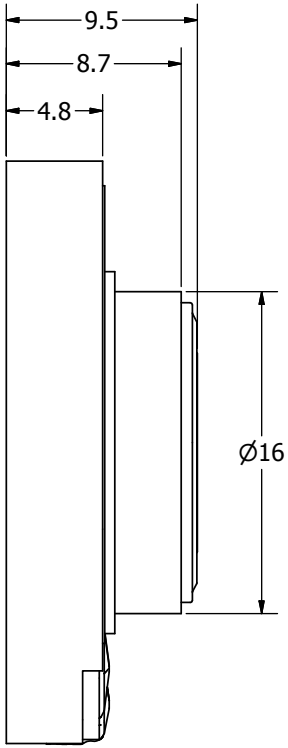

NOTES:

1. ALL DIMENSIONS ARE IN MILLIMETERS.
2. SPECIFICATIONS SUBJECT TO CHANGE OR WITHDRAWL WITHOUT NOTICE.
3. THIS PART IS RoHS 2002/95/EC COMPLIANT.

UNLESS OTHERWISE SPECIFIED:
DIMENSIONS ARE IN MILLIMETERS,
TOLERANCES ARE ±0.5 AND ANGLES ARE ±3°.

SIZE A3

ADS02908MR-R.idw

Designed by	Date	Checked by	Date	Approved by	Date	Drawn Date
J.D.	9/21/2005	B.R.	9/21/2005	E.P.	9/21/2005	10/29/2008

pui audio
A Division of Projects Unlimited

ADS02908MR-R

Speaker

Edition -

Sheet 1 / 1