To our customers,

Old Company Name in Catalogs and Other Documents

On April 1st, 2010, NEC Electronics Corporation merged with Renesas Technology Corporation, and Renesas Electronics Corporation took over all the business of both companies. Therefore, although the old company name remains in this document, it is a valid Renesas Electronics document. We appreciate your understanding.

Renesas Electronics website: http://www.renesas.com

April 1st, 2010
Renesas Electronics Corporation

Issued by: Renesas Electronics Corporation (http://www.renesas.com)

Send any inquiries to http://www.renesas.com/inquiry.

RENESAS

Notice

1. All information included in this document is current as of the date this document is issued. Such information, however, is subject to change without any prior notice. Before purchasing or using any Renesas Electronics products listed herein, please confirm the latest product information with a Renesas Electronics sales office. Also, please pay regular and careful attention to additional and different information to be disclosed by Renesas Electronics such as that disclosed through our website.
2. Renesas Electronics does not assume any liability for infringement of patents, copyrights, or other intellectual property rights of third parties by or arising from the use of Renesas Electronics products or technical information described in this document. No license, express, implied or otherwise, is granted hereby under any patents, copyrights or other intellectual property rights of Renesas Electronics or others.
3. You should not alter, modify, copy, or otherwise misappropriate any Renesas Electronics product, whether in whole or in part.
4. Descriptions of circuits, software and other related information in this document are provided only to illustrate the operation of semiconductor products and application examples. You are fully responsible for the incorporation of these circuits, software, and information in the design of your equipment. Renesas Electronics assumes no responsibility for any losses incurred by you or third parties arising from the use of these circuits, software, or information.
5. When exporting the products or technology described in this document, you should comply with the applicable export control laws and regulations and follow the procedures required by such laws and regulations. You should not use Renesas Electronics products or the technology described in this document for any purpose relating to military applications or use by the military, including but not limited to the development of weapons of mass destruction. Renesas Electronics products and technology may not be used for or incorporated into any products or systems whose manufacture, use, or sale is prohibited under any applicable domestic or foreign laws or regulations.
6. Renesas Electronics has used reasonable care in preparing the information included in this document, but Renesas Electronics does not warrant that such information is error free. Renesas Electronics assumes no liability whatsoever for any damages incurred by you resulting from errors in or omissions from the information included herein.
7. Renesas Electronics products are classified according to the following three quality grades: "Standard", "High Quality", and "Specific". The recommended applications for each Renesas Electronics product depends on the product's quality grade, as indicated below. You must check the quality grade of each Renesas Electronics product before using it in a particular application. You may not use any Renesas Electronics product for any application categorized as "Specific" without the prior written consent of Renesas Electronics. Further, you may not use any Renesas Electronics product for any application for which it is not intended without the prior written consent of Renesas Electronics. Renesas Electronics shall not be in any way liable for any damages or losses incurred by you or third parties arising from the use of any Renesas Electronics product for an application categorized as "Specific" or for which the product is not intended where you have failed to obtain the prior written consent of Renesas Electronics. The quality grade of each Renesas Electronics product is "Standard" unless otherwise expressly specified in a Renesas Electronics data sheets or data books, etc.

   "Standard": Computers; office equipment; communications equipment; test and measurement equipment; audio and visual equipment; home electronic appliances; machine tools; personal electronic equipment; and industrial robots.

   "High Quality": Transportation equipment (automobiles, trains, ships, etc.); traffic control systems; anti-disaster systems; anti-crime systems; safety equipment; and medical equipment not specifically designed for life support.

   "Specific": Aircraft; aerospace equipment; submersible repeaters; nuclear reactor control systems; medical equipment or systems for life support (e.g. artificial life support devices or systems), surgical implantations, or healthcare intervention (e.g. excision, etc.), and any other applications or purposes that pose a direct threat to human life.
8. You should use the Renesas Electronics products described in this document within the range specified by Renesas Electronics, especially with respect to the maximum rating, operating supply voltage range, movement power voltage range, heat radiation characteristics, installation and other product characteristics. Renesas Electronics shall have no liability for malfunctions or damages arising out of the use of Renesas Electronics products beyond such specified ranges.
9. Although Renesas Electronics endeavors to improve the quality and reliability of its products, semiconductor products have specific characteristics such as the occurrence of failure at a certain rate and malfunctions under certain use conditions. Further, Renesas Electronics products are not subject to radiation resistance design. Please be sure to implement safety measures to guard them against the possibility of physical injury, and injury or damage caused by fire in the event of the failure of a Renesas Electronics product, such as safety design for hardware and software including but not limited to redundancy, fire control and malfunction prevention, appropriate treatment for aging degradation or any other appropriate measures. Because the evaluation of microcomputer software alone is very difficult, please evaluate the safety of the final products or system manufactured by you.
10. Please contact a Renesas Electronics sales office for details as to environmental matters such as the environmental compatibility of each Renesas Electronics product. Please use Renesas Electronics products in compliance with all applicable laws and regulations that regulate the inclusion or use of controlled substances, including without limitation, the EU RoHS Directive. Renesas Electronics assumes no liability for damages or losses occurring as a result of your noncompliance with applicable laws and regulations.
11. This document may not be reproduced or duplicated, in any form, in whole or in part, without prior written consent of Renesas Electronics.
12. Please contact a Renesas Electronics sales office if you have any questions regarding the information contained in this document or Renesas Electronics products, or if you have any other inquiries.

(Note 1) "Renesas Electronics" as used in this document means Renesas Electronics Corporation and also includes its majority-owned subsidiaries.

(Note 2) "Renesas Electronics product(s)" means any product developed or manufactured by or for Renesas Electronics.

M16C/6N Group (M16C/6N5)

Renesas MCU

REJ03B0004-0240
Rev.2.40
Aug 25, 2006

1. Overview

The M16C/6N Group (M16C/6N5) of MCUs are built using the high-performance silicon gate CMOS process using the M16C/60 Series CPU core and are packaged in 100-pin plastic molded QFP and LQFP. These MCUs operate using sophisticated instructions featuring a high level of instruction efficiency. With 1 Mbyte of address space, they are capable of executing instructions at high speed. Being equipped with one CAN (Controller Area Network) module in the M16C/6N Group (M16C/6N5), the MCU is suited to drive automotive and industrial control systems. The CAN module complies with the 2.0B specification. In addition, this MCU contains a multiplier and DMAC which combined with fast instruction processing capability, makes it suitable for control of various OA, communication, and industrial equipment which requires high-speed arithmetic/logic operations.

1.1 Applications

- Automotive, industrial control systems and other automobile, other (T/V-ver. product)
- Car audio and industrial control systems, other (Normal-ver. product)

Specifications written in this manual are believed to be accurate, but are not guaranteed to be entirely free of error. Specifications in this manual may be changed for functional or performance improvements. Please make sure your manual is the latest edition.

1.2 Performance Overview

Table 1.1 lists the Functions and Specifications for M16C/6N Group (M16C/6N5).

Table 1.1 Functions and Specifications for M16C/6N Group (M16C/6N5)

Item			Specification	
			Normal-ver.	T/V-ver.
CPU	Number of fundamental instructions		91 instructions	
	Minimum instruction execution time		41.7 ns (f(BCLK) = 24 MHz, 1/1 prescaler, without software wait)	50.0 ns (f(BCLK) = 20 MHz, 1/1 prescaler, without software wait)
	Operating mode		Single-chip, memory expansion, and microprocessor modes	
	Address space		1 Mbyte	
	Memory capacity		Refer to **Table 1.2 Product Information**	
Peripheral Function	Ports		Input/Output: 87 pins, Input: 1 pin	
	Multifunction timers		Timer A: 16 bits × 5 channels Timer B: 16 bits × 6 channels Three-phase motor control circuit	
	Serial interfaces		3 channels Clock synchronous, UART, I²C-bus (1), IEBus (2) 1 channel Clock synchronous	
	A/D converter		10-bit A/D converter: 1 circuit, 26 channels	
	D/A converter		8 bits × 2 channels	
	DMAC		2 channels	
	CRC calculation circuit		CRC-CCITT	
	CAN module		1 channel with 2.0B specification	
	Watchdog timer		15 bits × 1 channel (with prescaler)	
	Interrupts		Internal: 29 sources, External: 9 sources Software: 4 sources, Priority levels: 7 levels	
	Clock generation circuits		4 circuits • Main clock oscillation circuit (*) • Sub clock oscillation circuit (*) • On-chip oscillator • PLL frequency synthesizer (*) Equipped with on-chip feedback resistor	
	Oscillation-stopped detector		Main clock oscillation stop and re-oscillation detection function	
Electrical Characteristics	Supply voltage		VCC = 3.0 to 5.5 V (f(BCLK) = 24 MHz, 1/1 prescaler, without software wait)	VCC = 4.2 to 5.5 V (f(BCLK) = 20 MHz, 1/1 prescaler, without software wait)
	Consumption current	Mask ROM	18 mA (f(BCLK) = 24 MHz, PLL operation, no division)	16 mA (f(BCLK) = 20 MHz, PLL operation, no division)
		Flash memory	20 mA (f(BCLK) = 24 MHz, PLL operation, no division)	18 mA (f(BCLK) = 20 MHz, PLL operation, no division)
		Mask ROM	3 μA (f(BCLK) = 32 kHz, Wait mode, Oscillation capacity Low)	
		Flash memory	0.8 μA (Stop mode, Topr = 25°C)	
Flash Memory Version	Programming and erasure voltage		3.0 ± 0.3 V or 5.0 ± 0.5 V	5.0 ± 0.5 V
	Programming and erasure endurance		100 times	
I/O Characteristics	I/O withstand voltage		5.0 V	
	Output current		5 mA	
Operating Ambient Temperature			-40 to 85°C	T version: -40 to 85°C V version: -40 to 125°C (option)
Device Configuration			CMOS high-performance silicon gate	
Package			100-pin molded-plastic QFP, LQFP	

NOTES:
1. I²C-bus is a trademark of Koninklijke Philips Electronics N.V.
2. IEBus is a trademark of NEC Electronics Corporation.

option: All options are on request basis.

1.3 Block Diagram

Figure 1.1 shows a Block Diagram.

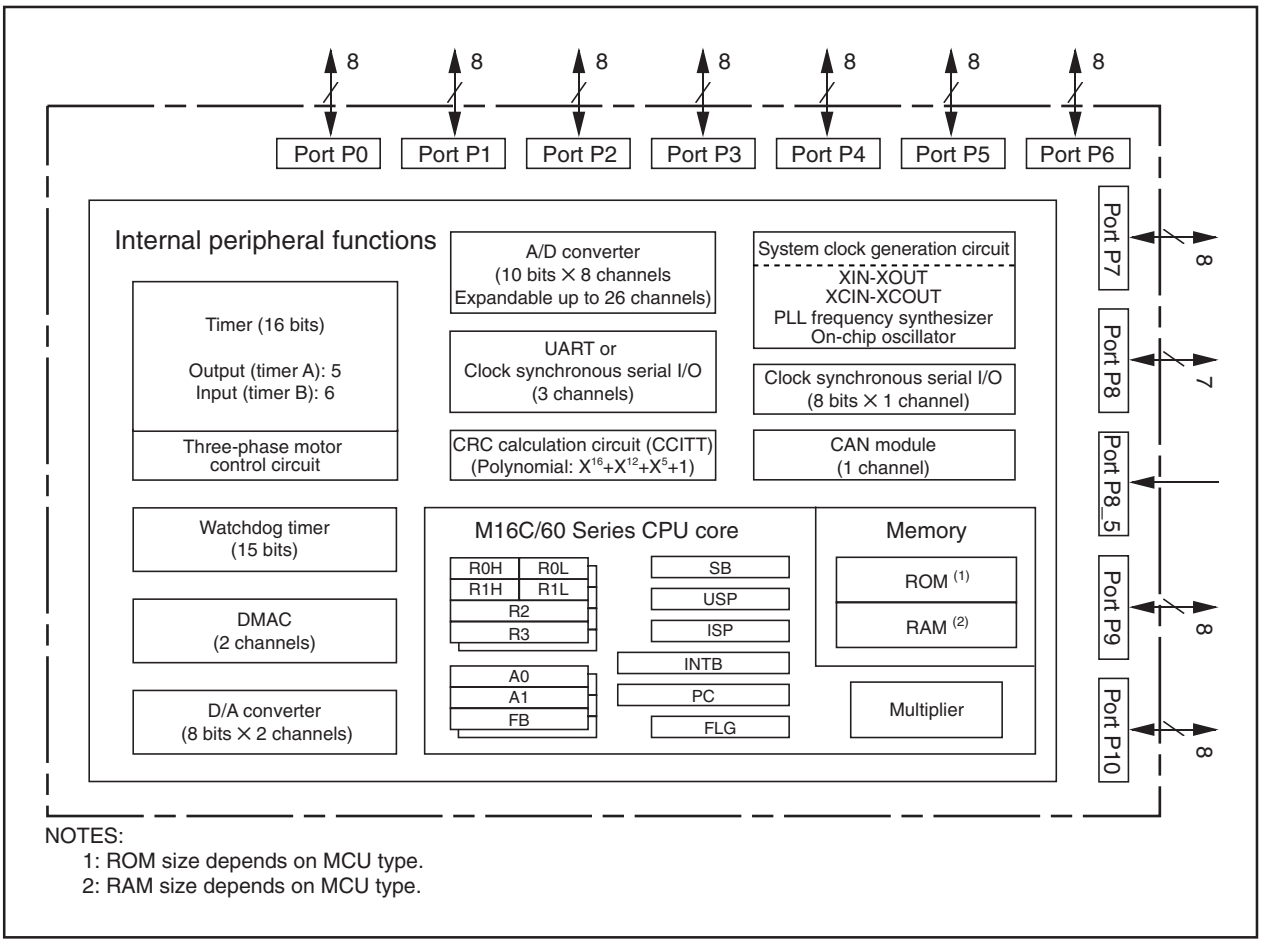

NOTES:
1: ROM size depends on MCU type.
2: RAM size depends on MCU type.

Figure 1.1 Block Diagram

1.4 Product Information

Table 1.2 lists the Product Information and Figure 1.2 shows the Type Number, Memory Size, and Packages.

Table 1.2 Product Information As of Aug. 2006

Type No.	ROM Capacity	RAM Capacity	Package Type [2]	Remarks	
M306N5FCFP	128 K + 4 Kbytes	5 Kbytes	PRQP0100JB-A	Flash memory version [1]	Normal-ver.
M306N5FCGP			PLQP0100KB-A		
M306N5FCTFP			PRQP0100JB-A		T-ver.
M306N5FCTGP			PLQP0100KB-A		
M306N5FCVFP			PRQP0100JB-A		V-ver.
M306N5FCVGP			PLQP0100KB-A		
M306N5MC-XXXGP	128 Kbytes	5 Kbytes	PLQP0100KB-A	Mask ROM version	Normal-ver.
M306N5MCT-XXXFP			PRQP0100JB-A		T-ver.
M306N5MCT-XXXGP			PLQP0100KB-A		
M306N5MCV-XXXFP			PRQP0100JB-A		V-ver.
M306N5MCV-XXXGP (D)			PLQP0100KB-A		

(D): Under development

NOTES:

1. Data flash memory provides an additional 4 Kbytes of ROM capacity (block A).
2. The correspondence between new and old package types is as follows.
   PRQP0100JB-A: 100P6S-A
   PLQP0100KB-A: 100P6Q-A

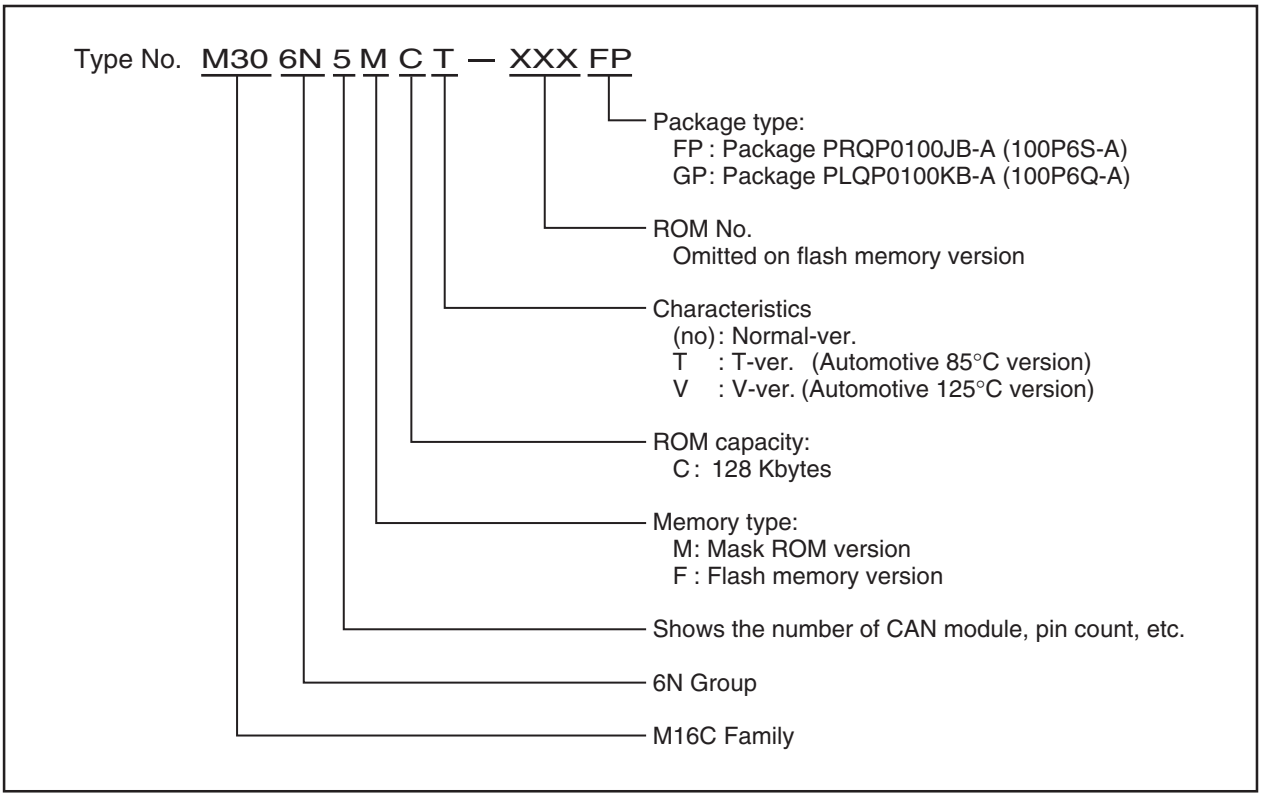

Figure 1.2 Type Number, Memory Size, and Package

1.5 Pin Assignments

Figures 1.3 and 1.4 show the Pin Assignment (Top View). Tables 1.3 and 1.4 list the List of Pin Names.

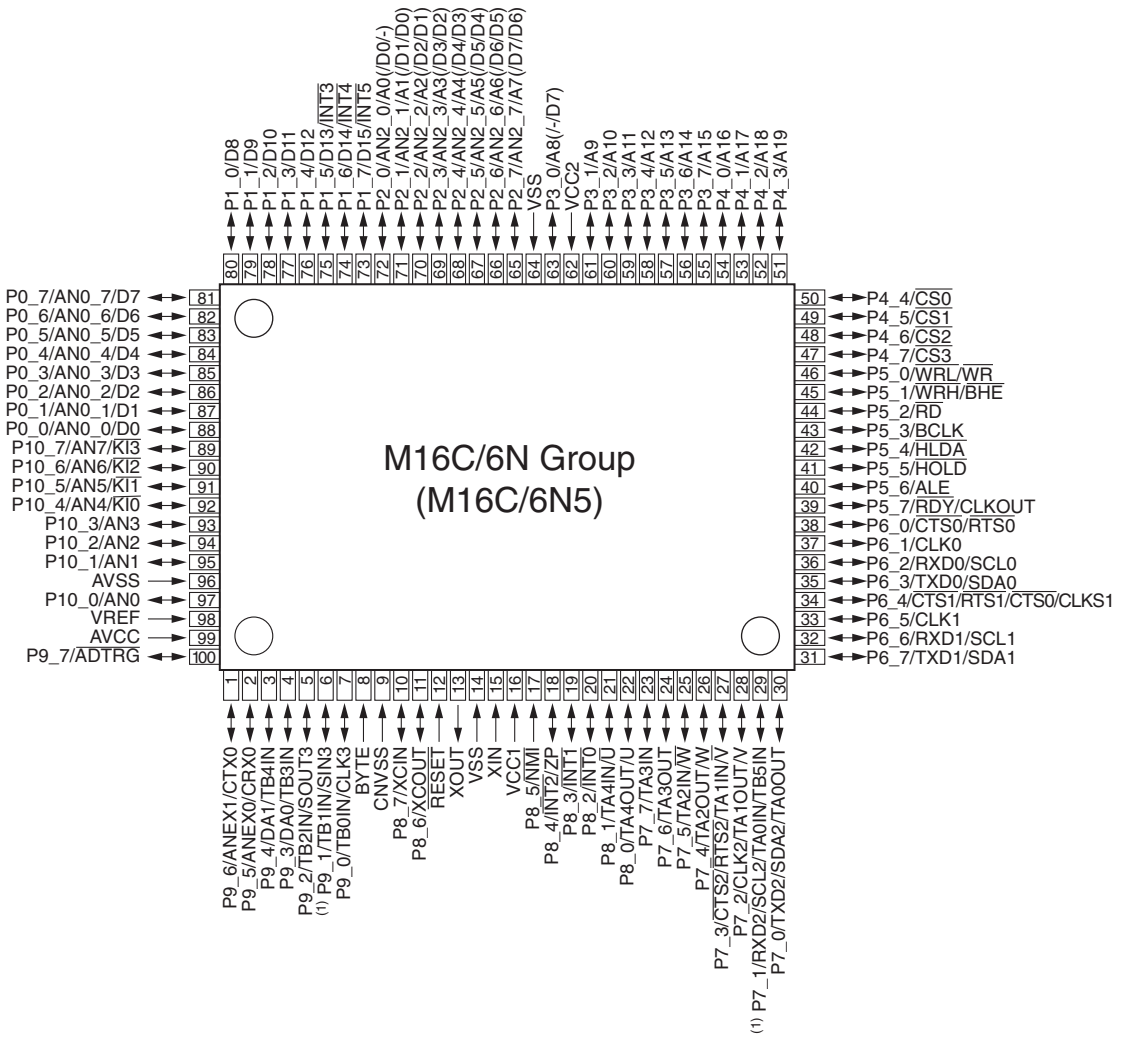

NOTE:

1. P7_1 and P9_1 are N channel open-drain pins.

Package: PRQP0100JB-A (100P6S-A)

Figure 1.3 Pin Assignments (Top View) (1)

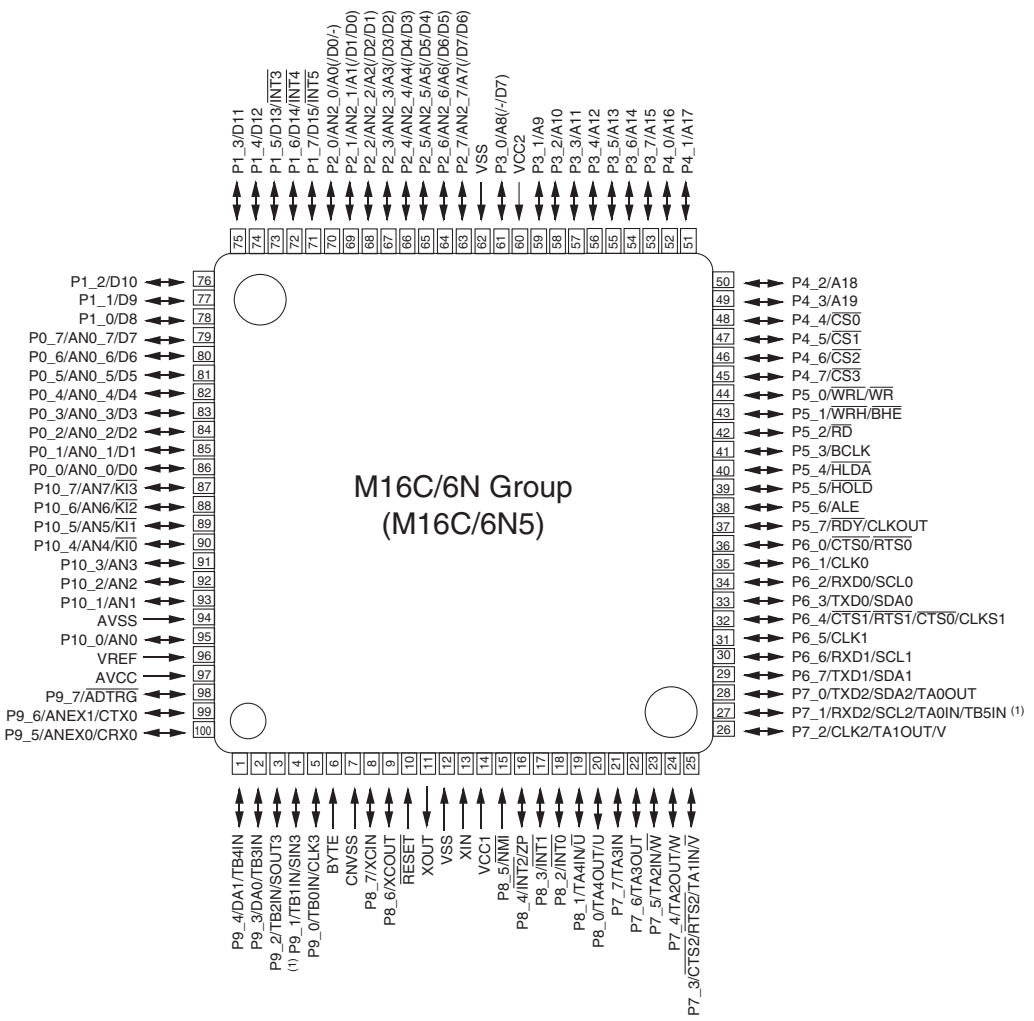

NOTE: Package: PLQP0100KB-A (100P6Q-A)

1. P7_1 and P9_1 are N channel open-drain pins.

Figure 1.4 Pin Assignments (Top View) (2)

Table 1.3 List of Pin Names (1)

Pin No.		Control Pin	Port	Interrupt Pin	Timer Pin	UART Pin	Analog Pin	CAN Module Pin	Bus Control Pin
FP	GP								
1	99		P9_6				ANEX1	CTX0	
2	100		P9_5				ANEX0	CRX0	
3	1		P9_4		TB4IN		DA1		
4	2		P9_3		TB3IN		DA0		
5	3		P9_2		TB2IN	SOUT3			
6	4		P9_1		TB1IN	SIN3			
7	5		P9_0		TB0IN	CLK3			
8	6	BYTE							
9	7	CNVSS							
10	8	XCIN	P8_7						
11	9	XCOUT	P8_6						
12	10	$\overline{\text{RESET}}$							
13	11	XOUT							
14	12	VSS							
15	13	XIN							
16	14	VCC1							
17	15		P8_5	$\overline{\text{NMI}}$					
18	16		P8_4	$\overline{\text{INT2}}$	ZP				
19	17		P8_3	INT1					
20	18		P8_2	INT0					
21	19		P8_1		TA4IN/$\overline{\text{U}}$				
22	20		P8_0		TA4OUT/U				
23	21		P7_7		TA3IN				
24	22		P7_6		TA3OUT				
25	23		P7_5		TA2IN/$\overline{\text{W}}$				
26	24		P7_4		TA2OUT/W				
27	25		P7_3		TA1IN/$\overline{\text{V}}$	$\overline{\text{CTS2}}$/$\overline{\text{RTS2}}$			
28	26		P7_2		TA1OUT/V	CLK2			
29	27		P7_1		TA0IN/TB5IN	RXD2/SCL2			
30	28		P7_0		TA0OUT	TXD2/SDA2			
31	29		P6_7			TXD1/SDA1			
32	30		P6_6			RXD1/SCL1			
33	31		P6_5			CLK1			
34	32		P6_4			$\overline{\text{CTS1}}$/$\overline{\text{RTS1}}$/$\overline{\text{CTS0}}$/CLKS1			
35	33		P6_3			TXD0/SDA0			
36	34		P6_2			RXD0/SCL0			
37	35		P6_1			CLK0			
38	36		P6_0			$\overline{\text{CTS0}}$/$\overline{\text{RTS0}}$			
39	37		P5_7						$\overline{\text{RDY}}$/CLKOUT
40	38		P5_6						ALE
41	39		P5_5						$\overline{\text{HOLD}}$
42	40		P5_4						$\overline{\text{HLDA}}$
43	41		P5_3						BCLK
44	42		P5_2						$\overline{\text{RD}}$
45	43		P5_1						$\overline{\text{WRH}}$/$\overline{\text{BHE}}$
46	44		P5_0						$\overline{\text{WRL}}$/$\overline{\text{WR}}$
47	45		P4_7						$\overline{\text{CS3}}$
48	46		P4_6						$\overline{\text{CS2}}$
49	47		P4_5						$\overline{\text{CS1}}$
50	48		P4_4						$\overline{\text{CS0}}$

FP: PRQP0100JB-A (100P6S-A), GP: PLQP0100KB-A (100P6Q-A)

Table 1.4 List of Pin Names (2)

Pin No. FP	Pin No. GP	Control Pin	Port	Interrupt Pin	Timer Pin	UART Pin	Analog Pin	CAN Module Pin	Bus Control Pin
51	49		P4_3						A19
52	50		P4_2						A18
53	51		P4_1						A17
54	52		P4_0						A16
55	53		P3_7						A15
56	54		P3_6						A14
57	55		P3_5						A13
58	56		P3_4						A12
59	57		P3_3						A11
60	58		P3_2						A10
61	59		P3_1						A9
62	60	VCC2							
63	61		P3_0						A8(/-/D7)
64	62	VSS							
65	63		P2_7				AN2_7		A7(/D7/D6)
66	64		P2_6				AN2_6		A6(/D6/D5)
67	65		P2_5				AN2_5		A5(/D5/D4)
68	66		P2_4				AN2_4		A4(/D4/D3)
69	67		P2_3				AN2_3		A3(/D3/D2)
70	68		P2_2				AN2_2		A2(/D2/D1)
71	69		P2_1				AN2_1		A1(/D1/D0)
72	70		P2_0				AN2_0		A0(/D0/-)
73	71		P1_7	$\overline{\text{INT5}}$					D15
74	72		P1_6	$\overline{\text{INT4}}$					D14
75	73		P1_5	$\overline{\text{INT3}}$					D13
76	74		P1_4						D12
77	75		P1_3						D11
78	76		P1_2						D10
79	77		P1_1						D9
80	78		P1_0						D8
81	79		P0_7				AN0_7		D7
82	80		P0_6				AN0_6		D6
83	81		P0_5				AN0_5		D5
84	82		P0_4				AN0_4		D4
85	83		P0_3				AN0_3		D3
86	84		P0_2				AN0_2		D2
87	85		P0_1				AN0_1		D1
88	86		P0_0				AN0_0		D0
89	87		P10_7	$\overline{\text{KI3}}$			AN7		
90	88		P10_6	$\overline{\text{KI2}}$			AN6		
91	89		P10_5	$\overline{\text{KI1}}$			AN5		
92	90		P10_4	$\overline{\text{KI0}}$			AN4		
93	91		P10_3				AN3		
94	92		P10_2				AN2		
95	93		P10_1				AN1		
96	94	AVSS							
97	95		P10_0				AN0		
98	96	VREF							
99	97	AVCC							
100	98		P9_7				$\overline{\text{ADTRG}}$		

FP: PRQP0100JB-A (100P6S-A), GP: PLQP0100KB-A (100P6Q-A)

1.6 Pin Functions

Tables 1.5 to 1.7 list the Pin Functions.

Table 1.5 Pin Functions (1)

Signal Name	Pin Name	I/O Type	Description
Power supply input	VCC1, VCC2, VSS	I	Apply 4.2 to 5.5 V (T/V-ver.), 3.0 to 5.5 V (Normal-ver.) to the VCC1 and VCC2 pins and 0 V to the VSS pin. The VCC apply condition is that VCC2 = VCC1 (1).
Analog power supply input	AVCC, AVSS	I	Applies the power supply for the A/D converter. Connect the AVCC pin to VCC1. Connect the AVSS pin to VSS.
Reset input	RESET	I	The MCU is in a reset state when applying "L" to the this pin.
CNVSS	CNVSS	I	Switches processor mode. Connect this pin to VSS to when after a reset to start up in single-chip mode. Connect this pin to VCC1 to start up in microprocessor mode.
External data bus width select input	BYTE	I	Switches the data bus in external memory space. The data bus is 16-bit long when the this pin is held "L" and 8-bit long when the this pin is held "H". Set it to either one. Connect this pin to VSS when single-chip mode.
Bus control pins	D0 to D7	I/O	Inputs and outputs data (D0 to D7) when these pins are set as the separate bus.
	D8 to D15	I/O	Inputs and outputs data (D8 to D15) when external 16-bit data bus is set as the separate bus.
	A0 to A19	O	Output address bits (A0 to A19).
	A0/D0 to A7/D7	I/O	Input and output data (D0 to D7) and output address bits (A0 to A7) by time-sharing when external 8-bit data bus are set as the multiplexed bus.
	A1/D0 to A8/D7	I/O	Input and output data (D0 to D7) and output address bits (A1 to A8) by time-sharing when external 16-bit data bus are set as the multiplexed bus.
	$\overline{CS0}$ to $\overline{CS3}$	O	Output $\overline{CS0}$ to $\overline{CS3}$ signals. $\overline{CS0}$ to $\overline{CS3}$ are chip-select signals to specify an external space.
	$\overline{WRL}$/$\overline{WR}$ $\overline{WRH}$/$\overline{BHE}$ $\overline{RD}$	O	Output $\overline{WRL}$, $\overline{WRH}$, ($\overline{WR}$, $\overline{BHE}$), $\overline{RD}$ signals. $\overline{WRL}$ and $\overline{WRH}$ or $\overline{BHE}$, and $\overline{WR}$ can be switched by program. • $\overline{WRL}$, $\overline{WRH}$, and $\overline{RD}$ are selected The $\overline{WRL}$ signal becomes "L" by writing data to an even address in an external memory space. The $\overline{WRH}$ signal becomes "L" by writing data to an odd address in an external memory space. The $\overline{RD}$ pin signal becomes "L" by reading data in an external memory space. • $\overline{WR}$, $\overline{BHE}$, and $\overline{RD}$ are selected The $\overline{WR}$ signal becomes "L" by writing data in an external memory space. The $\overline{RD}$ signal becomes "L" by reading data in an external memory space. The $\overline{BHE}$ signal becomes "L" by accessing an odd address. Select $\overline{WR}$, $\overline{BHE}$, and $\overline{RD}$ for an external 8-bit data bus.
	ALE	O	ALE is a signal to latch the address.
	$\overline{HOLD}$	I	While the $\overline{HOLD}$ pin is held "L", the MCU is placed in a hold state.
	$\overline{HLDA}$	O	In a hold state, $\overline{HLDA}$ outputs a "L" signal.
	$\overline{RDY}$	I	While applying a "L" signal to the $\overline{RDY}$ pin, the MCU is placed in a wait state.

I: Input O: Output I/O: Input/Output

NOTE:
1. In this manual, hereafter, VCC refers to VCC1 unless otherwise noted.

Table 1.6 Pin Functions (2)

Signal Name	Pin Name	I/O Type	Description
Main clock input	XIN	I	I/O pins for the main clock oscillation circuit. Connect a ceramic resonator or crystal oscillator between XIN and XOUT [1]. To use the external clock, input the clock from XIN and leave XOUT open.
Main clock output	XOUT	O	
Sub clock input	XCIN	I	I/O pins for a sub clock oscillation circuit. Connect a crystal oscillator between XCIN and XCOUT [1]. To use the external clock, input the clock from XCIN and leave XCOUT open.
Sub clock output	XCOUT	O	
BCLK output	BCLK	O	Outputs the BCLK signal.
Clock output	CLKOUT	O	The clock of the same cycle as fC, f8, or f32 is output.
$\overline{\text{INT}}$ interrupt input	$\overline{\text{INT0}}$ to $\overline{\text{INT5}}$	I	Input pins for the $\overline{\text{INT}}$ interrupt.
$\overline{\text{NMI}}$ interrupt input	$\overline{\text{NMI}}$	I	Input pin for the $\overline{\text{NMI}}$ interrupt.
Key input interrupt input	$\overline{\text{KI0}}$ to $\overline{\text{KI3}}$	I	Input pins for the key input interrupt.
Timer A	TA0OUT to TA4OUT	I/O	These are timer A0 to timer A4 I/O pins.
	TA0IN to TA4IN	I	These are timer A0 to timer A4 input pins.
	ZP	I	Input pin for the Z-phase.
Timer B	TB0IN to TB5IN	I	These are timer B0 to timer B5 input pins.
Three-phase motor control output	U, $\overline{\text{U}}$, V, $\overline{\text{V}}$, W, $\overline{\text{W}}$	O	These are Three-phase motor control output pins.
Serial interface	$\overline{\text{CTS0}}$ to $\overline{\text{CTS2}}$	I	These are transmit control input pins.
	$\overline{\text{RTS0}}$ to $\overline{\text{RTS2}}$	O	These are receive control output pins.
	CLK0 to CLK3	I/O	These are transfer clock I/O pins.
	RXD0 to RXD2	I	These are serial data input pins.
	SIN3	I	These are serial data input pins.
	TXD0 to TXD2	O	These are serial data output pins.
	SOUT3	O	These are serial data output pins.
	CLKS1	O	This is output pin for transfer clock output from multiple pins function.
I^2C mode	SDA0 to SDA2	I/O	These are serial data I/O pins.
	SCL0 to SCL2	I/O	These are transfer clock I/O pins. (however, SCL2 for the N-channel open drain output.)
Reference voltage input	VREF	I	Applies the reference voltage for the A/D converter and D/A converter.
A/D converter	AN0 to AN7 AN0_0 to AN0_7 AN2_0 to AN2_7	I	Analog input pins for the A/D converter.
	$\overline{\text{ADTRG}}$	I	This is an A/D trigger input pin.
	ANEX0	I/O	This is the extended analog input pin for the A/D converter, and is the output in external op-amp connection mode.
	ANEX1	I	This is the extended analog input pin for the A/D converter.
D/A converter	DA0, DA1	O	These are the output pins for the D/A converter.
CAN module	CRX0	I	This is the input pin for the CAN module.
	CTX0	O	This is the output pin for the CAN module.

I: Input O: Output I/O: Input/Output

NOTE:
1. Ask the oscillator maker the oscillation characteristic.

Table 1.7 Pin Functions (3)

Signal Name	Pin Name	I/O Type	Description
I/O port	P0_0 to P0_7 P1_0 to P1_7 P2_0 to P2_7 P3_0 to P3_7 P4_0 to P4_7 P5_0 to P5_7 P6_0 to P6_7 P7_0 to P7_7 P8_0 to P8_4 P8_6, P8_7 P9_0 to P9_7 P10_0 to P10_7	I/O	8-bit I/O ports in CMOS, having a direction register to select an input or output. Each pin is set as an input port or output port. An input port can be set for a pull-up or for no pull-up in 4-bit unit by program. (however, P7_1 and P9_1 for the N-channel open drain output.)
Input port	P8_5	I	Input pin for the $\overline{\text{NMI}}$ interrupt. Pin states can be read by the P8_5 bit in the P8 register.

I: Input O: Output I/O: Input/Output

2. Central Processing Unit (CPU)

Figure 2.1 shows the CPU Registers. The CPU has 13 registers. Of these, R0, R1, R2, R3, A0, A1, and FB configure a register bank. There are two register banks.

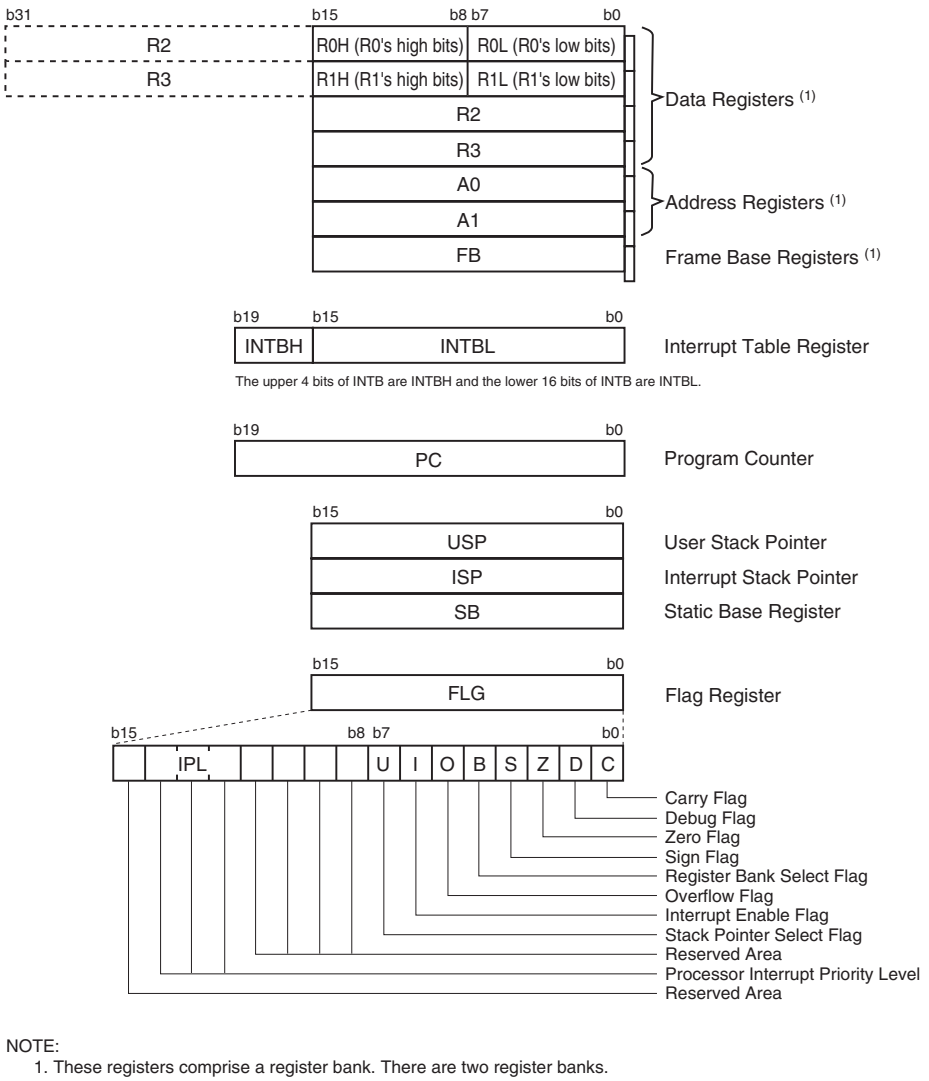

NOTE:
1. These registers comprise a register bank. There are two register banks.

Figure 2.1 CPU Registers

2.1 Data Registers (R0, R1, R2, and R3)

The R0 register consists of 16 bits, and is used mainly for transfers and arithmetic/logic operations. R1 to R3 are the same as R0.

The R0 register can be separated between high (R0H) and low (R0L) for use as two 8-bit data registers. R1H and R1L are the same as R0H and R0L. Conversely R2 and R0 can be combined for use as a 32-bit data register (R2R0). R3R1 is analogous to R2R0.

2.2 Address Registers (A0 and A1)

The A0 register consists of 16 bits, and is used for address register indirect addressing and address register relative addressing. They also are used for transfers and arithmetic/logic operations. A1 is the same as A0.

In some instructions, A1 and A0 can be combined for use as a 32-bit address register (A1A0).

2.3 Frame Base Register (FB)

FB is configured with 16 bits, and is used for FB relative addressing.

2.4 Interrupt Table Register (INTB)

INTB is configured with 20 bits, indicating the start address of an interrupt vector table.

2.5 Program Counter (PC)

PC is configured with 20 bits, indicating the address of an instruction to be executed.

2.6 User Stack Pointer (USP), Interrupt Stack Pointer (ISP)

Stack pointer (SP) comes in two types: USP and ISP, each configured with 16 bits.
Your desired type of stack pointer (USP or ISP) can be selected by the U flag of FLG.

2.7 Static Base Register (SB)

SB is configured with 16 bits, and is used for SB relative addressing.

2.8 Flag Register (FLG)

FLG consists of 11 bits, indicating the CPU status.

2.8.1 Carry Flag (C Flag)

This flag retains a carry, borrow, or shift-out bit that has occurred in the arithmetic/logic unit.

2.8.2 Debug Flag (D Flag)

This flag is used exclusively for debugging purpose. During normal use, set to 0.

2.8.3 Zero Flag (Z Flag)

This flag is set to 1 when an arithmetic operation resulted in 0; otherwise, it is 0.

2.8.4 Sign Flag (S Flag)

This flag is set to 1 when an arithmetic operation resulted in a negative value; otherwise, it is 0.

2.8.5 Register Bank Select Flag (B Flag)

Register bank 0 is selected when this flag is 0; register bank 1 is selected when this flag is 1.

2.8.6 Overflow Flag (O Flag)

This flag is set to 1 when the operation resulted in an overflow; otherwise, it is 0.

2.8.7 Interrupt Enable Flag (I Flag)

This flag enables a maskable interrupt.
Maskable interrupts are disabled when the I flag is 0, and are enabled when the I flag is 1. The I flag is set to 0 when the interrupt request is accepted.

2.8.8 Stack Pointer Select Flag (U Flag)

ISP is selected when the U flag is 0; USP is selected when the U flag is 1.
The U flag is set to 0 when a hardware interrupt request is accepted or an INT instruction for software interrupt Nos. 0 to 31 is executed.

2.8.9 Processor Interrupt Priority Level (IPL)

IPL is configured with three bits, for specification of up to eight processor interrupt priority levels from level 0 to level 7.
If a requested interrupt has priority greater than IPL, the interrupt request is enabled.

2.8.10 Reserved Area

When white to this bit, write 0. When read, its content is undefined.

3. Memory

Figure 3.1 shows a Memory Map. The address space extends the 1 Mbyte from address 00000h to FFFFFh. The internal ROM is allocated in a lower address direction beginning with address FFFFFh. For example, a 128-Kbyte internal ROM is allocated to the addresses from E0000h to FFFFFh.

As for the flash memory version, 4-Kbyte space (block A) exists in 0F000h to 0FFFFh. 4-Kbyte space is mainly for storing data. In addition to storing data, 4-Kbyte space also can store programs.

The fixed interrupt vector table is allocated to the addresses from FFFDCh to FFFFFh. Therefore, store the start address of each interrupt routine here.

The internal RAM is allocated in an upper address direction beginning with address 00400h. For example, a 5-Kbyte internal RAM is allocated to the addresses from 00400h to 017FFh. In addition to storing data, the internal RAM also stores the stack used when calling subroutines and when interrupts are generated.

The Special Function Registers (SFRs) are allocated to the addresses from 00000h to 003FFh. Peripheral function control registers are located here. Of the SFR, any area which has no functions allocated is reserved for future use and cannot be accessed by user.

The special page vector table is allocated to the addresses from FFE00h to FFFDBh. This vector is used by the JMPS or JSRS instruction. For details, refer to **M16C/60, M16C/20, M16C/Tiny Series Software Manual**.

In memory expansion and microprocessor modes, some areas are reserved for future use and cannot be used by users.

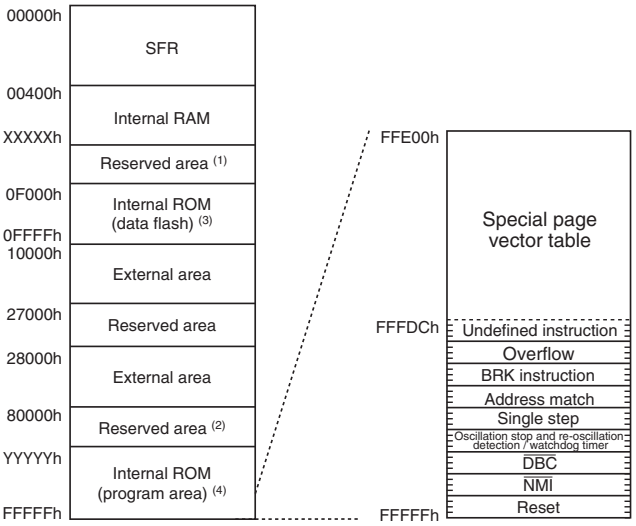

Internal RAM	
Capacity	Address XXXXXh
5 Kbytes	017FFh

Internal ROM (4)	
Capacity	Address YYYYYh
128 Kbytes	E0000h

NOTES:
1. During memory expansion mode or microprocessor mode, cannot be used.
2. In memory expansion mode, cannot be used.
3. As for the flash memory version, 4-Kbyte space (block A) exists.
4. When using the masked ROM version, write nothing to internal ROM area.
5. Shown here is a memory map for the case where the PM10 bit in the PM1 register is 1 (block A enabled, addresses 10000h to 26FFFh for $\overline{CS2}$ area).
   M16C/6N Group (M16C/6N5) has no device model expanded over 192 Kbytes of the internal ROM.
   Accordingly, set the PM13 bit to 0.

Figure 3.1 Memory Map

4. Special Function Registers (SFRs)

An SFR (Special Function Register) is a control register for a peripheral function.
Tables 4.1 to 4.12 list the SFR Information.

Table 4.1 SFR Information (1) [3]

Address	Register	Symbol	After Reset
0000h			
0001h			
0002h			
0003h			
0004h	Processor Mode Register 0 [1]	PM0	00000000b (CNVSS pin is "L") 00000011b (CNVSS pin is "H")
0005h	Processor Mode Register 1	PM1	00001000b
0006h	System Clock Control Register 0	CM0	01001000b
0007h	System Clock Control Register 1	CM1	00100000b
0008h	Chip Select Control Register	CSR	00000001b
0009h	Address Match Interrupt Enable Register	AIER	XXXXXX00b
000Ah	Protect Register	PRCR	XX000000b
000Bh			
000Ch	Oscillation Stop Detection Register [2]	CM2	0X000000b
000Dh			
000Eh	Watchdog Timer Start Register	WDTS	XXh
000Fh	Watchdog Timer Control Register	WDC	00XXXXXXb
0010h	Address Match Interrupt Register 0	RMAD0	00h
0011h			00h
0012h			X0h
0013h			
0014h	Address Match Interrupt Register 1	RMAD1	00h
0015h			00h
0016h			X0h
0017h			
0018h			
0019h			
001Ah			
001Bh	Chip Select Expansion Control Register	CSE	00h
001Ch	PLL Control Register 0	PLC0	0001X010b
001Dh			
001Eh	Processor Mode Register 2	PM2	XXX00000b
001Fh			
0020h	DMA0 Source Pointer	SAR0	XXh
0021h			XXh
0022h			XXh
0023h			
0024h	DMA0 Destination Pointer	DAR0	XXh
0025h			XXh
0026h			XXh
0027h			
0028h	DMA0 Transfer Counter	TCR0	XXh
0029h			XXh
002Ah			
002Bh			
002Ch	DMA0 Control Register	DM0CON	00000X00b
002Dh			
002Eh			
002Fh			
0030h	DMA1 Source Pointer	SAR1	XXh
0031h			XXh
0032h			XXh
0033h			
0034h	DMA1 Destination Pointer	DAR1	XXh
0035h			XXh
0036h			XXh
0037h			
0038h	DMA1 Transfer Counter	TCR1	XXh
0039h			XXh
003Ah			
003Bh			
003Ch	DMA1 Control Register	DM1CON	00000X00b
003Dh			
003Eh			
003Fh			

X: Undefined

NOTES:
1. Bits PM00 and PM01 in the PM0 register do not change at software reset, watchdog timer reset and oscillation stop detection reset.
2. Bits CM20, CM21, and CM27 in the CM2 register do not change at oscillation stop detection reset.
3. Blank spaces are reserved. No access is allowed.

Table 4.2 SFR Information (2) [1]

Address	Register	Symbol	After Reset
0040h			
0041h	CAN0 Wake-up Interrupt Control Register	C01WKIC	XXXXX000b
0042h	CAN0 Successful Reception Interrupt Control Register	C0RECIC	XXXXX000b
0043h	CAN0 Successful Transmission Interrupt Control Register	C0TRMIC	XXXXX000b
0044h	INT3 Interrupt Control Register	INT3IC	XX00X000b
0045h	Timer B5 Interrupt Control Register	TB5IC	XXXXX000b
0046h	Timer B4 Interrupt Control Register	TB4IC	XXXXX000b
	UART1 Bus Collision Detection Interrupt Control Register	U1BCNIC	
0047h	Timer B3 Interrupt Control Register	TB3IC	XXXXX000b
	UART0 Bus Collision Detection Interrupt Control Register	U0BCNIC	
0048h	INT5 Interrupt Control Register	INT5IC	XX00X000b
0049h	SI/O3 Interrupt Control Register	S3IC	XX00X000b
	INT4 Interrupt Control Register	INT4IC	
004Ah	UART2 Bus Collision Detection Interrupt Control Register	U2BCNIC	XXXXX000b
004Bh	DMA0 Interrupt Control Register	DM0IC	XXXXX000b
004Ch	DMA1 Interrupt Control Register	DM1IC	XXXXX000b
004Dh	CAN0 Error Interrupt Control Register	C01ERRIC	XXXXX000b
004Eh	A/D Conversion Interrupt Control Register	ADIC	XXXXX000b
	Key Input Interrupt Control Register	KUPIC	
004Fh	UART2 Transmit Interrupt Control Register	S2TIC	XXXXX000b
0050h	UART2 Receive Interrupt Control Register	S2RIC	XXXXX000b
0051h	UART0 Transmit Interrupt Control Register	S0TIC	XXXXX000b
0052h	UART0 Receive Interrupt Control Register	S0RIC	XXXXX000b
0053h	UART1 Transmit Interrupt Control Register	S1TIC	XXXXX000b
0054h	UART1 Receive Interrupt Control Register	S1RIC	XXXXX000b
0055h	Timer A0 Interrupt Control Register	TA0IC	XXXXX000b
0056h	Timer A1 Interrupt Control Register	TA1IC	XXXXX000b
0057h	Timer A2 Interrupt Control Register	TA2IC	XXXXX000b
0058h	Timer A3 Interrupt Control Register	TA3IC	XXXXX000b
0059h	Timer A4 Interrupt Control Register	TA4IC	XXXXX000b
005Ah	Timer B0 Interrupt Control Register	TB0IC	XXXXX000b
005Bh	Timer B1 Interrupt Control Register	TB1IC	XXXXX000b
005Ch	Timer B2 Interrupt Control Register	TB2IC	XXXXX000b
005Dh	INT0 Interrupt Control Register	INT0IC	XX00X000b
005Eh	INT1 Interrupt Control Register	INT1IC	XX00X000b
005Fh	INT2 Interrupt Control Register	INT2IC	XX00X000b
0060h	CAN0 Message Box 0: Identifier / DLC		XXh
0061h			XXh
0062h			XXh
0063h			XXh
0064h			XXh
0065h			XXh
0066h	CAN0 Message Box 0: Data Field		XXh
0067h			XXh
0068h			XXh
0069h			XXh
006Ah			XXh
006Bh			XXh
006Ch			XXh
006Dh			XXh
006Eh	CAN0 Message Box 0: Time Stamp		XXh
006Fh			XXh
0070h	CAN0 Message Box 1: Identifier / DLC		XXh
0071h			XXh
0072h			XXh
0073h			XXh
0074h			XXh
0075h			XXh
0076h	CAN0 Message Box 1: Data Field		XXh
0077h			XXh
0078h			XXh
0079h			XXh
007Ah			XXh
007Bh			XXh
007Ch			XXh
007Dh			XXh
007Eh	CAN0 Message Box 1: Time Stamp		XXh
007Fh			XXh

X: Undefined

NOTE:
1. Blank space is reserved. No access is allowed.

Table 4.3 SFR Information (3)

Address	Register	Symbol	After Reset
0080h	CAN0 Message Box 2: Identifier / DLC		XXh
0081h			XXh
0082h			XXh
0083h			XXh
0084h			XXh
0085h			XXh
0086h	CAN0 Message Box 2: Data Field		XXh
0087h			XXh
0088h			XXh
0089h			XXh
008Ah			XXh
008Bh			XXh
008Ch			XXh
008Dh			XXh
008Eh	CAN0 Message Box 2: Time Stamp		XXh
008Fh			XXh
0090h	CAN0 Message Box 3: Identifier / DLC		XXh
0091h			XXh
0092h			XXh
0093h			XXh
0094h			XXh
0095h			XXh
0096h	CAN0 Message Box 3: Data Field		XXh
0097h			XXh
0098h			XXh
0099h			XXh
009Ah			XXh
009Bh			XXh
009Ch			XXh
009Dh			XXh
009Eh	CAN0 Message Box 3: Time Stamp		XXh
009Fh			XXh
00A0h	CAN0 Message Box 4: Identifier / DLC		XXh
00A1h			XXh
00A2h			XXh
00A3h			XXh
00A4h			XXh
00A5h			XXh
00A6h	CAN0 Message Box 4: Data Field		XXh
00A7h			XXh
00A8h			XXh
00A9h			XXh
00AAh			XXh
00ABh			XXh
00ACh			XXh
00ADh			XXh
00AEh	CAN0 Message Box 4: Time Stamp		XXh
00AFh			XXh
00B0h	CAN0 Message Box 5: Identifier / DLC		XXh
00B1h			XXh
00B2h			XXh
00B3h			XXh
00B4h			XXh
00B5h			XXh
00B6h	CAN0 Message Box 5: Data Field		XXh
00B7h			XXh
00B8h			XXh
00B9h			XXh
00BAh			XXh
00BBh			XXh
00BCh			XXh
00BDh			XXh
00BEh	CAN0 Message Box 5: Time Stamp		XXh
00BFh			XXh

X: Undefined

Table 4.4 SFR Information (4)

Address	Register	Symbol	After Reset
00C0h	CAN0 Message Box 6: Identifier / DLC		XXh
00C1h			XXh
00C2h			XXh
00C3h			XXh
00C4h			XXh
00C5h			XXh
00C6h	CAN0 Message Box 6: Data Field		XXh
00C7h			XXh
00C8h			XXh
00C9h			XXh
00CAh			XXh
00CBh			XXh
00CCh			XXh
00CDh			XXh
00CEh	CAN0 Message Box 6: Time Stamp		XXh
00CFh			XXh
00D0h	CAN0 Message Box 7: Identifier / DLC		XXh
00D1h			XXh
00D2h			XXh
00D3h			XXh
00D4h			XXh
00D5h			XXh
00D6h	CAN0 Message Box 7: Data Field		XXh
00D7h			XXh
00D8h			XXh
00D9h			XXh
00DAh			XXh
00DBh			XXh
00DCh			XXh
00DDh			XXh
00DEh	CAN0 Message Box 7: Time Stamp		XXh
00DFh			XXh
00E0h	CAN0 Message Box 8: Identifier / DLC		XXh
00E1h			XXh
00E2h			XXh
00E3h			XXh
00E4h			XXh
00E5h			XXh
00E6h	CAN0 Message Box 8: Data Field		XXh
00E7h			XXh
00E8h			XXh
00E9h			XXh
00EAh			XXh
00EBh			XXh
00ECh			XXh
00EDh			XXh
00EEh	CAN0 Message Box 8: Time Stamp		XXh
00EFh			XXh
00F0h	CAN0 Message Box 9: Identifier / DLC		XXh
00F1h			XXh
00F2h			XXh
00F3h			XXh
00F4h			XXh
00F5h			XXh
00F6h	CAN0 Message Box 9: Data Field		XXh
00F7h			XXh
00F8h			XXh
00F9h			XXh
00FAh			XXh
00FBh			XXh
00FCh			XXh
00FDh			XXh
00FEh	CAN0 Message Box 9: Time Stamp		XXh
00FFh			XXh

X: Undefined

Table 4.5 SFR Information (5)

Address	Register	Symbol	After Reset
0100h	CAN0 Message Box 10: Identifier / DLC		XXh
0101h			XXh
0102h			XXh
0103h			XXh
0104h			XXh
0105h			XXh
0106h	CAN0 Message Box 10: Data Field		XXh
0107h			XXh
0108h			XXh
0109h			XXh
010Ah			XXh
010Bh			XXh
010Ch			XXh
010Dh			XXh
010Eh	CAN0 Message Box 10: Time Stamp		XXh
010Fh			XXh
0110h	CAN0 Message Box 11: Identifier / DLC		XXh
0111h			XXh
0112h			XXh
0113h			XXh
0114h			XXh
0115h			XXh
0116h	CAN0 Message Box 11: Data Field		XXh
0117h			XXh
0118h			XXh
0119h			XXh
011Ah			XXh
011Bh			XXh
011Ch			XXh
011Dh			XXh
011Eh	CAN0 Message Box 11: Time Stamp		XXh
011Fh			XXh
0120h	CAN0 Message Box 12: Identifier / DLC		XXh
0121h			XXh
0122h			XXh
0123h			XXh
0124h			XXh
0125h			XXh
0126h	CAN0 Message Box 12: Data Field		XXh
0127h			XXh
0128h			XXh
0129h			XXh
012Ah			XXh
012Bh			XXh
012Ch			XXh
012Dh			XXh
012Eh	CAN0 Message Box 12: Time Stamp		XXh
012Fh			XXh
0130h	CAN0 Message Box 13: Identifier / DLC		XXh
0131h			XXh
0132h			XXh
0133h			XXh
0134h			XXh
0135h			XXh
0136h	CAN0 Message Box 13: Data Field		XXh
0137h			XXh
0138h			XXh
0139h			XXh
013Ah			XXh
013Bh			XXh
013Ch			XXh
013Dh			XXh
013Eh	CAN0 Message Box 13: Time Stamp		XXh
013Fh			XXh

X: Undefined

Table 4.6 SFR Information (6) [1]

Address	Register	Symbol	After Reset
0140h	CAN0 Message Box 14: Identifier /DLC		XXh
0141h			XXh
0142h			XXh
0143h			XXh
0144h			XXh
0145h			XXh
0146h	CAN0 Message Box 14: Data Field		XXh
0147h			XXh
0148h			XXh
0149h			XXh
014Ah			XXh
014Bh			XXh
014Ch			XXh
014Dh			XXh
014Eh	CAN0 Message Box 14: Time Stamp		XXh
014Fh			XXh
0150h	CAN0 Message Box 15: Identifier /DLC		XXh
0151h			XXh
0152h			XXh
0153h			XXh
0154h			XXh
0155h			XXh
0156h	CAN0 Message Box 15: Data Field		XXh
0157h			XXh
0158h			XXh
0159h			XXh
015Ah			XXh
015Bh			XXh
015Ch			XXh
015Dh			XXh
015Eh	CAN0 Message Box 15: Time Stamp		XXh
015Fh			XXh
0160h	CAN0 Global Mask Register	C0GMR	XXh
0161h			XXh
0162h			XXh
0163h			XXh
0164h			XXh
0165h			XXh
0166h	CAN0 Local Mask A Register	C0LMAR	XXh
0167h			XXh
0168h			XXh
0169h			XXh
016Ah			XXh
016Bh			XXh
016Ch	CAN0 Local Mask B Register	C0LMBR	XXh
016Dh			XXh
016Eh			XXh
016Fh			XXh
0170h			XXh
0171h			XXh
0172h			
0173h			
0174h			
0175h			
0176h			
0177h			
0178h			
0179h			
017Ah			
017Bh			
017Ch			
017Dh			
017Eh			
017Fh			

X: Undefined

NOTE:
1. Blank spaces are reserved. No access is allowed.

Table 4.7 SFR Information (7) [2]

Address	Register	Symbol	After Reset
0180h			
0181h			
0182h			
0183h			
0184h			
0185h			
0186h			
0187h			
0188h			
0189h			
018Ah			
018Bh			
018Ch			
018Dh			
018Eh			
018Fh			
0190h			
0191h			
0192h			
0193h			
0194h			
0195h			
0196h			
0197h			
0198h			
0199h			
019Ah			
019Bh			
019Ch			
019Dh			
019Eh			
019Fh			
01A0h			
01A1h			
01A2h			
01A3h			
01A4h			
01A5h			
01A6h			
01A7h			
01A8h			
01A9h			
01AAh			
01ABh			
01ACh			
01ADh			
01AEh			
01AFh			
01B0h			
01B1h			
01B2h			
01B3h			
01B4h			
01B5h	Flash Memory Control Register 1 [1]	FMR1	0X00XX0Xb
01B6h			
01B7h	Flash Memory Control Register 0 [1]	FMR0	00000001b
01B8h	Address Match Interrupt Register 2	RMAD2	00h
01B9h			00h
01BAh			X0h
01BBh	Address Match Interrupt Enable Register 2	AIER2	XXXXXX00b
01BCh	Address Match Interrupt Register 3	RMAD3	00h
01BDh			00h
01BEh			X0h
01BFh			

X: Undefined

NOTES:
1. These registers are included in the flash memory version. Cannot be accessed by users in the mask ROM version.
2. Blank spaces are reserved. No access is allowed.

Table 4.8 SFR Information (8) [1]

Address	Register	Symbol	After Reset
01C0h	Timer B3, B4, B5 Count Start Flag	TBSR	000XXXXXb
01C1h			
01C2h	Timer A1-1 Register	TA11	XXh
01C3h			XXh
01C4h	Timer A2-1 Register	TA21	XXh
01C5h			XXh
01C6h	Timer A4-1 Register	TA41	XXh
01C7h			XXh
01C8h	Three-Phase PWM Control Register 0	INVC0	00h
01C9h	Three-Phase PWM Control Register 1	INVC1	00h
01CAh	Three-Phase Output Buffer Register 0	IDB0	00111111b
01CBh	Three-Phase Output Buffer Register 1	IDB1	00111111b
01CCh	Dead Time Timer	DTT	XXh
01CDh	Timer B2 Interrupt Generation Frequency Set Counter	ICTB2	XXh
01CEh			
01CFh			
01D0h	Timer B3 Register	TB3	XXh
01D1h			XXh
01D2h	Timer B4 Register	TB4	XXh
01D3h			XXh
01D4h	Timer B5 Register	TB5	XXh
01D5h			XXh
01D6h			
01D7h			
01D8h			
01D9h			
01DAh			
01DBh	Timer B3 Mode Register	TB3MR	00XX0000b
01DCh	Timer B4 Mode Register	TB4MR	00XX0000b
01DDh	Timer B5 Mode Register	TB5MR	00XX0000b
01DEh	Interrupt Source Select Register 0	IFSR0	00XXX000b
01DFh	Interrupt Source Select Register 1	IFSR1	00h
01E0h	SI/O3 Transmit/Receive Register	S3TRR	XXh
01E1h			
01E2h	SI/O3 Control Register	S3C	01000000b
01E3h	SI/O3 Bit Rate Register	S3BRG	XXh
01E4h			
01E5h			
01E6h			
01E7h			
01E8h			
01E9h			
01EAh			
01EBh			
01ECh	UART0 Special Mode Register 4	U0SMR4	00h
01EDh	UART0 Special Mode Register 3	U0SMR3	000X0X0Xb
01EEh	UART0 Special Mode Register 2	U0SMR2	X0000000b
01EFh	UART0 Special Mode Register	U0SMR	X0000000b
01F0h	UART1 Special Mode Register 4	U1SMR4	00h
01F1h	UART1 Special Mode Register 3	U1SMR3	000X0X0Xb
01F2h	UART1 Special Mode Register 2	U1SMR2	X0000000b
01F3h	UART1 Special Mode Register	U1SMR	X0000000b
01F4h	UART2 Special Mode Register 4	U2SMR4	00h
01F5h	UART2 Special Mode Register 3	U2SMR3	000X0X0Xb
01F6h	UART2 Special Mode Register 2	U2SMR2	X0000000b
01F7h	UART2 Special Mode Register	U2SMR	X0000000b
01F8h	UART2 Transmit/Receive Mode Register	U2MR	00h
01F9h	UART2 Bit Rate Register	U2BRG	XXh
01FAh	UART2 Transmit Buffer Register	U2TB	XXh
01FBh			XXh
01FCh	UART2 Transmit/Receive Control Register 0	U2C0	00001000b
01FDh	UART2 Transmit/Receive Control Register 1	U2C1	00000010b
01FEh	UART2 Receive Buffer Register	U2RB	XXh
01FFh			XXh

X: Undefined

NOTE:
1. Blank spaces are reserved. No access is allowed.

Table 4.9 SFR Information (9) [1]

Address	Register	Symbol	After Reset
0200h	CAN0 Message Control Register 0	C0MCTL0	00h
0201h	CAN0 Message Control Register 1	C0MCTL1	00h
0202h	CAN0 Message Control Register 2	C0MCTL2	00h
0203h	CAN0 Message Control Register 3	C0MCTL3	00h
0204h	CAN0 Message Control Register 4	C0MCTL4	00h
0205h	CAN0 Message Control Register 5	C0MCTL5	00h
0206h	CAN0 Message Control Register 6	C0MCTL6	00h
0207h	CAN0 Message Control Register 7	C0MCTL7	00h
0208h	CAN0 Message Control Register 8	C0MCTL8	00h
0209h	CAN0 Message Control Register 9	C0MCTL9	00h
020Ah	CAN0 Message Control Register 10	C0MCTL10	00h
020Bh	CAN0 Message Control Register 11	C0MCTL11	00h
020Ch	CAN0 Message Control Register 12	C0MCTL12	00h
020Dh	CAN0 Message Control Register 13	C0MCTL13	00h
020Eh	CAN0 Message Control Register 14	C0MCTL14	00h
020Fh	CAN0 Message Control Register 15	C0MCTL15	00h
0210h	CAN0 Control Register	C0CTLR	X0000001b
0211h			XX0X0000b
0212h	CAN0 Status Register	C0STR	00h
0213h			X0000001b
0214h	CAN0 Slot Status Register	C0SSTR	00h
0215h			00h
0216h	CAN0 Interrupt Control Register	C0ICR	00h
0217h			00h
0218h	CAN0 Extended ID Register	C0IDR	00h
0219h			00h
021Ah	CAN0 Configuration Register	C0CONR	XXh
021Bh			XXh
021Ch	CAN0 Receive Error Count Register	C0RECR	00h
021Dh	CAN0 Transmit Error Count Register	C0TECR	00h
021Eh	CAN0 Time Stamp Register	C0TSR	00h
021Fh			00h
0220h			
0221h			
0222h			
0223h			
0224h			
0225h			
0226h			
0227h			
0228h			
0229h			
022Ah			
022Bh			
022Ch			
022Dh			
022Eh			
022Fh			
0230h	CAN1 Control Register	C1CTLR	X0000001b
0231h			XX0X0000b
0232h			
0233h			
0234h			
0235h			
0236h			
0237h			
0238h			
0239h			
023Ah			
023Bh			
023Ch			
023Dh			
023Eh			
023Fh			

X: Undefined

NOTE:
1. Blank spaces are reserved. No access is allowed.

Table 4.10 SFR Information (10) [1]

Address	Register	Symbol	After Reset
0240h			
0241h			
0242h	CAN0 Acceptance Filter Support Register	C0AFS	XXh
0243h			XXh
0244h			
0245h			
0246h			
0247h			
0248h			
0249h			
024Ah			
024Bh			
024Ch			
024Dh			
024Eh			
024Fh			
0250h			
0251h			
0252h			
0253h			
0254h			
0255h			
0256h			
0257h			
0258h			
0259h			
025Ah			
025Bh			
025Ch			
025Dh			
025Eh	Peripheral Clock Select Register	PCLKR	00h
025Fh	CAN0 Clock Select Register	CCLKR	00h
0260h			
0261h			
0262h			
0263h			
0264h			
0265h			
0266h			
0267h			
0268h			
0269h			
026Ah			
026Bh			
026Ch			
026Dh			
026Eh			
026Fh			
0270h to 0372h			
0373h			
0374h			
0375h			
0376h			
0377h			
0378h			
0379h			
037Ah			
037Bh			
037Ch			
037Dh			
037Eh			
037Fh			

X: Undefined

NOTE:
1. Blank spaces are reserved. No access is allowed.

Table 4.11 SFR Information (11) [2]

Address	Register	Symbol	After Reset
0380h	Count Start Flag	TABSR	00h
0381h	Clock Prescaler Reset Flag	CPSRF	0XXXXXXXb
0382h	One-Shot Start Flag	ONSF	00h
0383h	Trigger Select Register	TRGSR	00h
0384h	Up/Down Flag	UDF	00h [1]
0385h			
0386h	Timer A0 Register	TA0	XXh
0387h			XXh
0388h	Timer A1 Register	TA1	XXh
0389h			XXh
038Ah	Timer A2 Register	TA2	XXh
038Bh			XXh
038Ch	Timer A3 Register	TA3	XXh
038Dh			XXh
038Eh	Timer A4 Register	TA4	XXh
038Fh			XXh
0390h	Timer B0 Register	TB0	XXh
0391h			XXh
0392h	Timer B1 Register	TB1	XXh
0393h			XXh
0394h	Timer B2 Register	TB2	XXh
0395h			XXh
0396h	Timer A0 Mode Register	TA0MR	00h
0397h	Timer A1 Mode Register	TA1MR	00h
0398h	Timer A2 Mode Register	TA2MR	00h
0399h	Timer A3 Mode Register	TA3MR	00h
039Ah	Timer A4 Mode Register	TA4MR	00h
039Bh	Timer B0 Mode Register	TB0MR	00XX0000b
039Ch	Timer B1 Mode Register	TB1MR	00XX0000b
039Dh	Timer B2 Mode Register	TB2MR	00XX0000b
039Eh	Timer B2 Special Mode Register	TB2SC	XXXXXX00b
039Fh			
03A0h	UART0 Transmit/Receive Mode Register	U0MR	00h
03A1h	UART0 Bit Rate Register	U0BRG	XXh
03A2h	UART0 Transmit Buffer Register	U0TB	XXh
03A3h			XXh
03A4h	UART0 Transmit/Receive Control Register 0	U0C0	00001000b
03A5h	UART0 Transmit/Receive Control Register 1	U0C1	00XX0010b
03A6h	UART0 Receive Buffer Register	U0RB	XXh
03A7h			XXh
03A8h	UART1 Transmit/Receive Mode Register	U1MR	00h
03A9h	UART1 Bit Rate Register	U1BRG	XXh
03AAh	UART1 Transmit Buffer Register	U1TB	XXh
03ABh			XXh
03ACh	UART1 Transmit/Receive Control Register 0	U1C0	00001000b
03ADh	UART1 Transmit/Receive Control Register 1	U1C1	00XX0010b
03AEh	UART1 Receive Buffer Register	U1RB	XXh
03AFh			XXh
03B0h	UART Transmit/Receive Control Register 2	UCON	X0000000b
03B1h			
03B2h			
03B3h			
03B4h			
03B5h			
03B6h			
03B7h			
03B8h	DMA0 Request Source Select Register	DM0SL	00h
03B9h			
03BAh	DMA1 Request Source Select Register	DM1SL	00h
03BBh			
03BCh	CRC Data Register	CRCD	XXh
03BDh			XXh
03BEh	CRC Input Register	CRCIN	XXh
03BFh			

X: Undefined

NOTES:
1. Bits TA2P to TA4P in the UDF register are set to 0 after reset. However, the contents in these bits are undefined when read.
2. Blank spaces are reserved. No access is allowed.

Table 4.12 SFR Information (12) [2]

Address	Register	Symbol	After Reset
03C0h	A/D Register 0	AD0	XXh
03C1h			XXh
03C2h	A/D Register 1	AD1	XXh
03C3h			XXh
03C4h	A/D Register 2	AD2	XXh
03C5h			XXh
03C6h	A/D Register 3	AD3	XXh
03C7h			XXh
03C8h	A/D Register 4	AD4	XXh
03C9h			XXh
03CAh	A/D Register 5	AD5	XXh
03CBh			XXh
03CCh	A/D Register 6	AD6	XXh
03CDh			XXh
03CEh	A/D Register 7	AD7	XXh
03CFh			XXh
03D0h			
03D1h			
03D2h			
03D3h			
03D4h	A/D Control Register 2	ADCON2	00h
03D5h			
03D6h	A/D Control Register 0	ADCON0	00000XXXb
03D7h	A/D Control Register 1	ADCON1	00h
03D8h	D/A Register 0	DA0	00h
03D9h			
03DAh	D/A Register 1	DA1	00h
03DBh			
03DCh	D/A Control Register	DACON	00h
03DDh			
03DEh			
03DFh			
03E0h	Port P0 Register	P0	XXh
03E1h	Port P1 Register	P1	XXh
03E2h	Port P0 Direction Register	PD0	00h
03E3h	Port P1 Direction Register	PD1	00h
03E4h	Port P2 Register	P2	XXh
03E5h	Port P3 Register	P3	XXh
03E6h	Port P2 Direction Register	PD2	00h
03E7h	Port P3 Direction Register	PD3	00h
03E8h	Port P4 Register	P4	XXh
03E9h	Port P5 Register	P5	XXh
03EAh	Port P4 Direction Register	PD4	00h
03EBh	Port P5 Direction Register	PD5	00h
03ECh	Port P6 Register	P6	XXh
03EDh	Port P7 Register	P7	XXh
03EEh	Port P6 Direction Register	PD6	00h
03EFh	Port P7 Direction Register	PD7	00h
03F0h	Port P8 Register	P8	XXh
03F1h	Port P9 Register	P9	XXh
03F2h	Port P8 Direction Register	PD8	00X00000b
03F3h	Port P9 Direction Register	PD9	00h
03F4h	Port P10 Register	P10	XXh
03F5h			
03F6h	Port P10 Direction Register	PD10	00h
03F7h			
03F8h			
03F9h			
03FAh			
03FBh			
03FCh	Pull-up Control Register 0	PUR0	00h
03FDh	Pull-up Control Register 1	PUR1	00000000b [1] 00000010b
03FEh	Pull-up Control Register 2	PUR2	00h
03FFh	Port Control Register	PCR	00h

X: Undefined

NOTES:
1. At hardware reset, the register is as follows:
   - 00000000b where "L" is input to the CNVSS pin
   - 00000010b where "H" is input to the CNVSS pin

   At software reset, watchdog timer reset and oscillation stop detection reset, the register is as follows:
   - 00000000b where bits PM01 to PM00 in the PM0 register are 00b (single-chip mode)
   - 00000010b where bits PM01 to PM00 in the PM0 register are 01b (memory expansion mode) or 11b (microprocessor mode)
2. Blank spaces are reserved. No access is allowed.

5. Electrical Characteristics

5.1 Electrical Characteristics (T/V-ver.)

Table 5.1 Absolute Maximum Ratings

Symbol	Parameter			Condition	Rated Value	Unit
V_{CC}	Supply voltage (VCC1 = VCC2)			VCC = AVCC	–0.3 to 6.5	V
AV_{CC}	Analog supply voltage			VCC = AVCC	–0.3 to 6.5	V
V_I	Input voltage	$\overline{RESET}$, CNVSS, BYTE, P0_0 to P0_7, P1_0 to P1_7, P2_0 to P2_7, P3_0 to P3_7, P4_0 to P4_7, P5_0 to P5_7, P6_0 to P6_7, P7_0, P7_2 to P7_7, P8_0 to P8_7, P9_0, P9_2 to P9_7, P10_0 to P10_7, VREF, XIN			–0.3 to VCC+0.3	V
		P7_1, P9_1			–0.3 to 6.5	V
V_O	Output voltage	P0_0 to P0_7, P1_0 to P1_7, P2_0 to P2_7, P3_0 to P3_7, P4_0 to P4_7, P5_0 to P5_7, P6_0 to P6_7, P7_0, P7_2 to P7_7, P8_0 to P8_4, P8_6, P8_7, P9_0, P9_2 to P9_7, P10_0 to P10_7, XOUT			–0.3 to VCC+0.3	V
		P7_1, P9_1			–0.3 to 6.5	V
P_d	Power dissipation			Topr = 25°C	700	mW
T_{opr}	Operating ambient temperature		During MCU operation		T version: –40 to 85 V version: –40 to 125 (option)	°C
			During flash memory program and erase operation		0 to 60	
T_{stg}	Storage temperature				–65 to 150	°C

option: All options are on request basis.

Table 5.2 Recommended Operating Conditions (1) [1]

Symbol	Parameter		Standard			Unit
			Min.	Typ.	Max.	
V_{CC}	Supply voltage (VCC1 = VCC2)		4.2	5.0	5.5	V
AV_{CC}	Analog supply voltage			V_{CC}		V
V_{SS}	Supply voltage			0		V
AV_{SS}	Analog supply voltage			0		V
V_{IH}	HIGH input voltage	P3_1 to P3_7, P4_0 to P4_7, P5_0 to P5_7, P6_0 to P6_7, P7_0, P7_2 to P7_7, P8_0 to P8_7, P9_0, P9_2 to P9_7, P10_0 to P10_7, XIN, $\overline{RESET}$, CNVSS, BYTE	0.8 V_{CC}		V_{CC}	V
		P7_1, P9_1	0.8 V_{CC}		6.5	V
		P0_0 to P0_7, P1_0 to P1_7, P2_0 to P2_7, P3_0 (During single-chip mode)	0.8 V_{CC}		V_{CC}	V
		P0_0 to P0_7, P1_0 to P1_7, P2_0 to P2_7, P3_0 (Data input during memory expansion and microprocessor modes)	0.5 V_{CC}		V_{CC}	V
V_{IL}	LOW input voltage	P3_1 to P3_7, P4_0 to P4_7, P5_0 to P5_7, P6_0 to P6_7, P7_0 to P7_7, P8_0 to P8_7, P9_0 to P9_7, P10_0 to P10_7, XIN, $\overline{RESET}$, CNVSS, BYTE	0		0.2 V_{CC}	V
		P0_0 to P0_7, P1_0 to P1_7, P2_0 to P2_7, P3_0 (During single-chip mode)	0		0.2 V_{CC}	V
		P0_0 to P0_7, P1_0 to P1_7, P2_0 to P2_7, P3_0 (Data input during memory expansion and microprocessor modes)	0		0.16 V_{CC}	V
$I_{OH(peak)}$	HIGH peak output current	P0_0 to P0_7, P1_0 to P1_7, P2_0 to P2_7, P3_0 to P3_7, P4_0 to P4_7, P5_0 to P5_7, P6_0 to P6_7, P7_0, P7_2 to P7_7, P8_0 to P8_4, P8_6, P8_7, P9_0, P9_2 to P9_7, P10_0 to P10_7			–10.0	mA
$I_{OH(avg)}$	HIGH average output current	P0_0 to P0_7, P1_0 to P1_7, P2_0 to P2_7, P3_0 to P3_7, P4_0 to P4_7, P5_0 to P5_7, P6_0 to P6_7, P7_0, P7_2 to P7_7, P8_0 to P8_4, P8_6, P8_7, P9_0, P9_2 to P9_7, P10_0 to P10_7			–5.0	mA
$I_{OL(peak)}$	LOW peak output current	P0_0 to P0_7, P1_0 to P1_7, P2_0 to P2_7, P3_0 to P3_7, P4_0 to P4_7, P5_0 to P5_7, P6_0 to P6_7, P7_0 to P7_7, P8_0 to P8_4, P8_6, P8_7, P9_0 to P9_7, P10_0 to P10_7			10.0	mA
$I_{OL(avg)}$	LOW average output current	P0_0 to P0_7, P1_0 to P1_7, P2_0 to P2_7, P3_0 to P3_7, P4_0 to P4_7, P5_0 to P5_7, P6_0 to P6_7, P7_0 to P7_7, P8_0 to P8_4, P8_6, P8_7, P9_0 to P9_7, P10_0 to P10_7			5.0	mA

NOTES:

1. Referenced to VCC = 4.2 to 5.5 V at Topr = –40 to 85°C unless otherwise specified.
2. Average output current values during 100 ms period.
3. The total $I_{OL(peak)}$ for ports P0, P1, P2, P8_6, P8_7, P9, and P10 must be 80 mA max.
   The total $I_{OL(peak)}$ for ports P3, P4, P5, P6, P7, and P8_0 to P8_4 must be 80 mA max.
   The total $I_{OH(peak)}$ for ports P0, P1, and P2 must be –40 mA max.
   The total $I_{OH(peak)}$ for ports P3, P4, and P5 must be –40 mA max.
   The total $I_{OH(peak)}$ for ports P6, P7, and P8_0 to P8_4 must be –40 mA max.
   The total $I_{OH(peak)}$ for ports P8_6, P8_7, P9, and P10 must be –40 mA max.

Table 5.3 Recommended Operating Conditions (2) (1)

Symbol	Parameter				Standard			Unit
					Min.	Typ.	Max.	
f(XIN)	Main clock input oscillation frequency (2) (3) (4)	No wait	Mask ROM version Flash memory version	VCC = 4.2 to 5.5 V	0		16	MHz
f(XCIN)	Sub clock oscillation frequency					32.768	50	kHz
f(Ring)	On-chip oscillation frequency					1		MHz
f(PLL)	PLL clock oscillation frequency				16		20	MHz
f(BCLK)	CPU operation clock			VCC = 4.2 to 5.5 V	0		20	MHz
$t_{su(PLL)}$	PLL frequency synthesizer stabilization wait time						20	ms

NOTES:

1. Referenced to VCC = 4.2 to 5.5 V at Topr = –40 to 85°C unless otherwise specified.
2. Relationship between main clock oscillation frequency and supply voltage is shown right.
3. Execute program/erase of flash memory by VCC = 5.0 ± 0.5 V.
4. When using over 16 MHz, use PLL clock. PLL clock oscillation frequency which can be used is 16 MHz or 20 MHz.

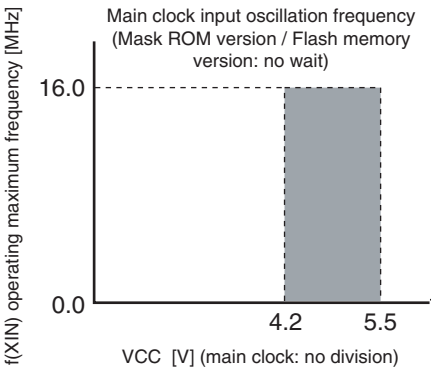

Table 5.4 Electrical Characteristics (1) [1]

Symbol	Parameter			Measuring Condition	Standard Min.	Standard Typ.	Standard Max.	Unit
V_{OH}	HIGH output voltage	P0_0 to P0_7, P1_0 to P1_7, P2_0 to P2_7, P3_0 to P3_7, P4_0 to P4_7, P5_0 to P5_7, P6_0 to P6_7, P7_0, P7_2 to P7_7, P8_0 to P8_4, P8_6, P8_7, P9_0, P9_2 to P9_7, P10_0 to P10_7		I_{OH} = –5 mA	V_{CC}-2.0		V_{CC}	V
V_{OH}	HIGH output voltage	P0_0 to P0_7, P1_0 to P1_7, P2_0 to P2_7, P3_0 to P3_7, P4_0 to P4_7, P5_0 to P5_7, P6_0 to P6_7, P7_0, P7_2 to P7_7, P8_0 to P8_4, P8_6, P8_7, P9_0, P9_2 to P9_7, P10_0 to P10_7		I_{OH} = –200 μA	V_{CC}-0.3		V_{CC}	V
V_{OH}	HIGH output voltage	XOUT	HIGHPOWER	I_{OH} = –1 mA	3.0		V_{CC}	V
			LOWPOWER	I_{OH} = –0.5 mA	3.0		V_{CC}	
	HIGH output voltage	XCOUT	HIGHPOWER	With no load applied		2.5		V
			LOWPOWER	With no load applied		1.6		
V_{OL}	LOW output voltage	P0_0 to P0_7, P1_0 to P1_7, P2_0 to P2_7, P3_0 to P3_7, P4_0 to P4_7, P5_0 to P5_7, P6_0 to P6_7, P7_0 to P7_7, P8_0 to P8_4, P8_6, P8_7, P9_0 to P9_7, P10_0 to P10_7		I_{OL} = 5 mA			2.0	V
V_{OL}	LOW output voltage	P0_0 to P0_7, P1_0 to P1_7, P2_0 to P2_7, P3_0 to P3_7, P4_0 to P4_7, P5_0 to P5_7, P6_0 to P6_7, P7_0 to P7_7, P8_0 to P8_4, P8_6, P8_7, P9_0 to P9_7, P10_0 to P10_7		I_{OL} = 200 μA			0.45	V
V_{OL}	LOW output voltage	XOUT	HIGHPOWER	I_{OL} = 1 mA			2.0	V
			LOWPOWER	I_{OL} = 0.5 mA			2.0	
	LOW output voltage	XCOUT	HIGHPOWER	With no load applied		0		V
			LOWPOWER	With no load applied		0		
V_{T+}-V_{T-}	Hysteresis	$\overline{HOLD}$, $\overline{RDY}$, TA0IN to TA4IN, TB0IN to TB5IN, $\overline{INT0}$ to $\overline{INT5}$, $\overline{NMI}$, $\overline{ADTRG}$, $\overline{CTS0}$ to $\overline{CTS2}$, SCL0 to SCL2, SDA0 to SDA2, CLK0 to CLK3, TA0OUT to TA4OUT, $\overline{KI0}$ to $\overline{KI3}$, RXD0 to RXD2, SIN3			0.2		1.0	V
V_{T+}-V_{T-}	Hysteresis	$\overline{RESET}$			0.2		2.5	V
I_{IH}	HIGH input current	P0_0 to P0_7, P1_0 to P1_7, P2_0 to P2_7, P3_0 to P3_7, P4_0 to P4_7, P5_0 to P5_7, P6_0 to P6_7, P7_0 to P7_7, P8_0 to P8_7, P9_0 to P9_7, P10_0 to P10_7, XIN, $\overline{RESET}$, CNVSS, BYTE		V_I = 5 V			5.0	μA
I_{IL}	LOW input current	P0_0 to P0_7, P1_0 to P1_7, P2_0 to P2_7, P3_0 to P3_7, P4_0 to P4_7, P5_0 to P5_7, P6_0 to P6_7, P7_0 to P7_7, P8_0 to P8_7, P9_0 to P9_7, P10_0 to P10_7, XIN, $\overline{RESET}$, CNVSS, BYTE		V_I = 0 V			–5.0	μA
R_{PULLUP}	Pull-up resistance	P0_0 to P0_7, P1_0 to P1_7, P2_0 to P2_7, P3_0 to P3_7, P4_0 to P4_7, P5_0 to P5_7, P6_0 to P6_7, P7_0, P7_2 to P7_7, P8_0 to P8_4, P8_6, P8_7, P9_0, P9_2 to P9_7, P10_0 to P10_7		V_I = 0 V	30	50	170	kΩ
R_{fXIN}	Feedback resistance	XIN				1.5		MΩ
R_{fXCIN}	Feedback resistance	XCIN				15		MΩ
V_{RAM}	RAM retention voltage			At stop mode	2.0			V

NOTES:

1. Referenced to VCC = 4.2 to 5.5 V, VSS = 0 V at Topr = –40 to 85°C, f(BCLK) = 20 MHz unless otherwise specified.

Table 5.5 Electrical Characteristics (2) [1]

Symbol	Parameter		Measuring Condition		Standard			Unit
					Min.	Typ.	Max.	
I_{CC}	Power supply current (VCC = 4.2 to 5.5 V)	In single-chip mode, the output pins are open and other pins are VSS.	Mask ROM	f(BCLK) = 20 MHz, PLL operation, No division		16	28	mA
				On-chip oscillation, No division		1		mA
			Flash memory	f(BCLK) = 20 MHz, PLL operation, No division		18	30	mA
				On-chip oscillation, No division		1.8		mA
			Flash memory program	f(BCLK) = 10 MHz, VCC = 5 V		15		mA
			Flash memory erase	f(BCLK) = 10 MHz, VCC = 5 V		25		mA
			Mask ROM	f(BCLK) = 32 kHz, Low power dissipation mode, ROM [2]		25		μA
			Flash memory	f(BCLK) = 32 kHz, Low power dissipation mode, RAM [2]		25		μA
				f(BCLK) = 32 kHz, Low power dissipation mode, Flash memory [2]		420		μA
			Mask ROM Flash memory	On-chip oscillation, Wait mode		50		μA
				f(BCLK) = 32 kHz, Wait mode [3], Oscillation capacity High		8.5		μA
				f(BCLK) = 32 kHz, Wait mode [3], Oscillation capacity Low		3.0		μA
				Stop mode, Topr = 25°C		0.8	3.0	μA

NOTES:
1. Referenced to VCC = 4.2 to 5.5 V, VSS = 0 V at Topr = –40 to 85°C, f(BCLK) = 20 MHz unless otherwise specified.
2. This indicates the memory in which the program to be executed exists.
3. With one timer operated using fC32.

Table 5.6 A/D Conversion Characteristics (1)

Symbol	Parameter		Measuring Condition		Standard			Unit
					Min.	Typ.	Max.	
–	Resolution		VREF = VCC				10	Bit
INL	Integral nonlinearity error	10 bits	VREF = VCC = 5 V	ANEX0, ANEX1 input, AN0 to AN7 input, AN0_0 to AN0_7 input, AN2_0 to AN2_7 input			±3	LSB
				External operation amp connection mode			±7	LSB
		8 bits	VREF = AVCC = VCC = 5 V				±2	LSB
–	Absolute accuracy	10 bits	VREF = VCC = 5 V	ANEX0, ANEX1 input, AN0 to AN7 input, AN0_0 to AN0_7 input, AN2_0 to AN2_7 input			±3	LSB
				External operation amp connection mode			±7	LSB
		8 bits	VREF = AVCC = VCC = 5 V				±2	LSB
DNL	Differential nonlinearity error						±1	LSB
–	Offset error						±3	LSB
–	Gain error						±3	LSB
R_{LADDER}	Resistor ladder		VREF = VCC		10		40	kΩ
t_{CONV}	10-bit conversion time, sample & hold available		VREF = VCC = 5 V, ϕAD = 10 MHz		3.3			μs
	8-bit conversion time, sample & hold available		VREF = VCC = 5 V, ϕAD = 10 MHz		2.8			μs
t_{SAMP}	Sampling time				0.3			μs
V_{REF}	Reference voltage				2.0		V_{CC}	V
V_{IA}	Analog input voltage				0		V_{REF}	V

NOTES:
1. Referenced to VCC = AVCC = VREF = 4.2 to 5.5 V, VSS = AVSS = 0 V, –40 to 85°C unless otherwise specified.
2. ϕAD frequency must be 10 MHz or less.
3. When sample & hold is disabled, ϕAD frequency must be 250kHz or more in addition to a limit of NOTE 2.
   When sample & hold is enabled, ϕAD frequency must be 1MHz or more in addition to a limit of NOTE 2.

Table 5.7 D/A conversion Characteristics (1)

Symbol	Parameter	Measuring condition	Standard			Unit
			Min.	Typ.	Max.	
–	Resolution				8	Bits
–	Absolute accuracy				1.0	%
t_{su}	Setup time				3	μs
R_O	Output resistance		4	10	20	kΩ
I_{VREF}	Reference power supply input current	(NOTE 2)			1.5	mA

NOTES:
1. Referenced to VCC = AVCC = VREF = 4.2 to 5.5 V, VSS = AVSS = 0 V, –40 to 85°C unless otherwise specified.
2. This applies when using one D/A converter, with the DAi register (i = 0, 1) for the unused D/A converter set to 00h. The resistor ladder of the A/D converter is not included. Also, the I_{VREF} will flow even if VREF is disconnected by the ADCON1 register.

Table 5.8 Power Supply Circuit Timing Characteristics

Symbol	Parameter	Measuring Condition	Standard			Unit
			Min.	Typ.	Max.	
$t_{d(P-R)}$	Time for internal power supply stabilization during powering-on	VCC = 4.2 to 5.5 V			2	ms
$t_{d(R-S)}$	STOP release time				150	μs
$t_{d(W-S)}$	Low power dissipation mode wait mode release time				150	μs

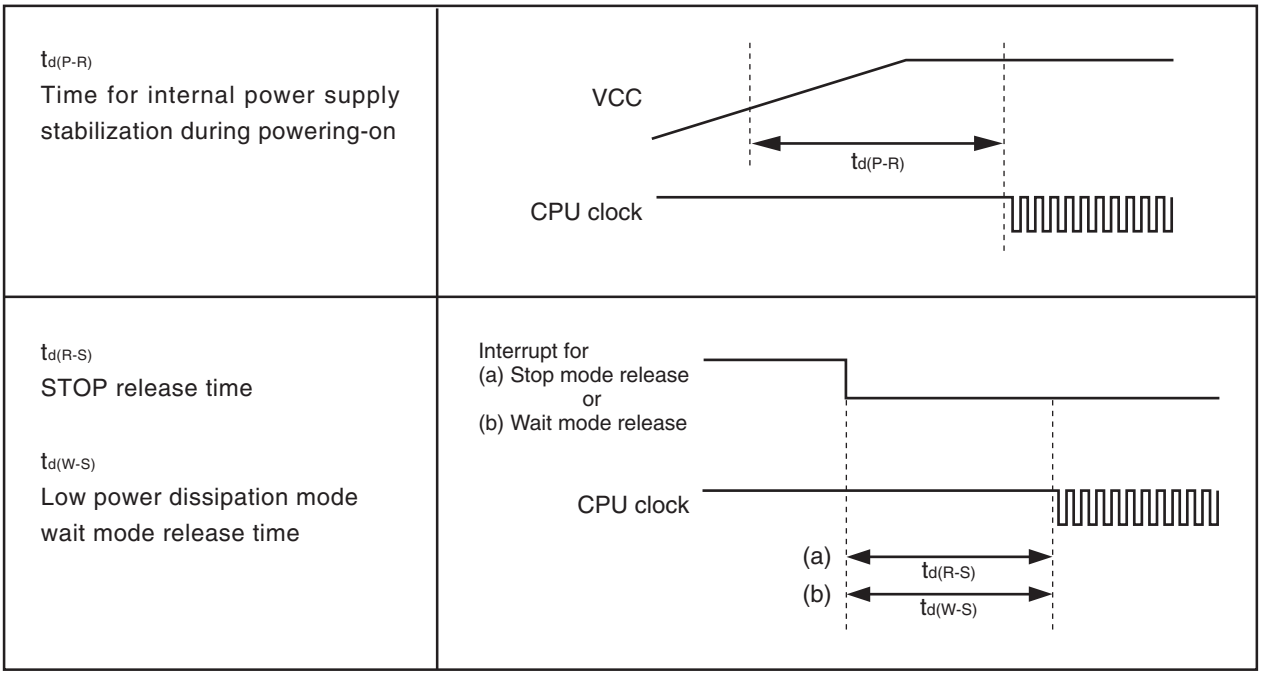

Figure 5.1 Power Supply Circuit Timing Diagram

Timing Requirements **VCC = 5 V**

(Referenced to VCC = 5 V, VSS = 0 V, at Topr = –40 to 85°C unless otherwise specified)

Table 5.9 External Clock Input (XIN Input)

Symbol	Parameter	Standard		Unit
		Min.	Max.	
t_c	External clock input cycle time	62.5		ns
$t_{w(H)}$	External clock input HIGH pulse width	25		ns
$t_{w(L)}$	External clock input LOW pulse width	25		ns
t_r	External clock rise time		15	ns
t_f	External clock fall time		15	ns

Table 5.10 Memory Expansion Mode and Microprocessor Mode

Symbol	Parameter	Standard		Unit
		Min.	Max.	
$t_{ac1(RD-DB)}$	Data input access time (for setting with no wait)		(NOTE 1)	ns
$t_{ac2(RD-DB)}$	Data input access time (for setting with wait)		(NOTE 2)	ns
$t_{ac3(RD-DB)}$	Data input access time (when accessing multiplexed bus area)		(NOTE 3)	ns
$t_{su(DB-RD)}$	Data input setup time	40		ns
$t_{su(RDY-BCLK)}$	$\overline{RDY}$ input setup time	30		ns
$t_{su(HOLD-BCLK)}$	$\overline{HOLD}$ input setup time	40		ns
$t_{h(RD-DB)}$	Data input hold time	0		ns
$t_{h(BCLK-RDY)}$	$\overline{RDY}$ input hold time	0		ns
$t_{h(BCLK-HOLD)}$	$\overline{HOLD}$ input hold time	0		ns

NOTES:

1. Calculated according to the BCLK frequency as follows:

$$\frac{0.5 \times 10^9}{f(BCLK)} - 45 \text{ [ns]}$$

2. Calculated according to the BCLK frequency as follows:

$$\frac{(n - 0.5) \times 10^9}{f(BCLK)} - 45 \text{ [ns]}$$

n is “2” for 1-wait setting, “3” for 2-wait setting and “4” for 3-wait setting.

3. Calculated according to the BCLK frequency as follows:

$$\frac{(n - 0.5) \times 10^9}{f(BCLK)} - 45 \text{ [ns]}$$

n is “2” for 2-wait setting, “3” for 3-wait setting.

Timing Requirements **VCC = 5 V**

(Referenced to VCC = 5 V, VSS = 0 V, at Topr = –40 to 85°C unless otherwise specified)

Table 5.11 Timer A Input (Counter Input in Event Counter Mode)

Symbol	Parameter	Standard		Unit
		Min.	Max.	
$t_{c(TA)}$	TAiIN input cycle time	100		ns
$t_{w(TAH)}$	TAiIN input HIGH pulse width	40		ns
$t_{w(TAL)}$	TAiIN input LOW pulse width	40		ns

Table 5.12 Timer A Input (Gating Input in Timer Mode)

Symbol	Parameter	Standard		Unit
		Min.	Max.	
$t_{c(TA)}$	TAiIN input cycle time	400		ns
$t_{w(TAH)}$	TAiIN input HIGH pulse width	200		ns
$t_{w(TAL)}$	TAiIN input LOW pulse width	200		ns

Table 5.13 Timer A Input (External Trigger Input in One-shot Timer Mode)

Symbol	Parameter	Standard		Unit
		Min.	Max.	
$t_{c(TA)}$	TAiIN input cycle time	200		ns
$t_{w(TAH)}$	TAiIN input HIGH pulse width	100		ns
$t_{w(TAL)}$	TAiIN input LOW pulse width	100		ns

Table 5.14 Timer A Input (External Trigger Input in Pulse Width Modulation Mode)

Symbol	Parameter	Standard		Unit
		Min.	Max.	
$t_{w(TAH)}$	TAiIN input HIGH pulse width	100		ns
$t_{w(TAL)}$	TAiIN input LOW pulse width	100		ns

Table 5.15 Timer A Input (Counter Increment/decrement Input in Event Counter Mode)

Symbol	Parameter	Standard		Unit
		Min.	Max.	
$t_{c(UP)}$	TAiOUT input cycle time	2000		ns
$t_{w(UPH)}$	TAiOUT input HIGH pulse width	1000		ns
$t_{w(UPL)}$	TAiOUT input LOW pulse width	1000		ns
$t_{su(UP-TIN)}$	TAiOUT input setup time	400		ns
$t_{h(TIN-UP)}$	TAiOUT input hold time	400		ns

Table 5.16 Timer A Input (Two-phase Pulse Input in Event Counter Mode)

Symbol	Parameter	Standard		Unit
		Min.	Max.	
$t_{c(TA)}$	TAiIN input cycle time	800		ns
$t_{su(TAIN-TAOUT)}$	TAiOUT input setup time	200		ns
$t_{su(TAOUT-TAIN)}$	TAiIN input setup time	200		ns

Timing Requirements

VCC = 5 V

(Referenced to VCC = 5 V, VSS = 0 V, at Topr = –40 to 85°C unless otherwise specified)

Table 5.17 Timer B Input (Counter Input in Event Counter Mode)

Symbol	Parameter	Standard		Unit
		Min.	Max.	
$t_{c(TB)}$	TBiIN input cycle time (counted on one edge)	100		ns
$t_{w(TBH)}$	TBiIN input HIGH pulse width (counted on one edge)	40		ns
$t_{w(TBL)}$	TBiIN input LOW pulse width (counted on one edge)	40		ns
$t_{c(TB)}$	TBiIN input cycle time (counted on both edges)	200		ns
$t_{w(TBH)}$	TBiIN input HIGH pulse width (counted on both edges)	80		ns
$t_{w(TBL)}$	TBiIN input LOW pulse width (counted on both edges)	80		ns

Table 5.18 Timer B Input (Pulse Period Measurement Mode)

Symbol	Parameter	Standard		Unit
		Min.	Max.	
$t_{c(TB)}$	TBiIN input cycle time	400		ns
$t_{w(TBH)}$	TBiIN input HIGH pulse width	200		ns
$t_{w(TBL)}$	TBiIN input LOW pulse width	200		ns

Table 5.19 Timer B Input (Pulse Width Measurement Mode)

Symbol	Parameter	Standard		Unit
		Min.	Max.	
$t_{c(TB)}$	TBiIN input cycle time	400		ns
$t_{w(TBH)}$	TBiIN input HIGH pulse width	200		ns
$t_{w(TBL)}$	TBiIN input LOW pulse width	200		ns

Table 5.20 A/D Trigger Input

Symbol	Parameter	Standard		Unit
		Min.	Max.	
$t_{C(AD)}$	$\overline{ADTRG}$ input cycle time (trigger able minimum)	1000		ns
$t_{w(ADL)}$	$\overline{ADTRG}$ input LOW pulse width	125		ns

Table 5.21 Serial Interface

Symbol	Parameter	Standard		Unit
		Min.	Max.	
$t_{c(CK)}$	CLKi input cycle time	200		ns
$t_{w(CKH)}$	CLKi input HIGH pulse width	100		ns
$t_{w(CKL)}$	CLKi input LOW pulse width	100		ns
$t_{d(C-Q)}$	TXDi output delay time		80	ns
$t_{h(C-Q)}$	TXDi hold time	0		ns
$t_{su(D-C)}$	RXDi input setup time	70		ns
$t_{h(C-D)}$	RXDi input hold time	90		ns

Table 5.22 External Interrupt $\overline{INTi}$ Input

Symbol	Parameter	Standard		Unit
		Min.	Max.	
$t_{w(INH)}$	$\overline{INTi}$ input HIGH pulse width	250		ns
$t_{w(INL)}$	$\overline{INTi}$ input LOW pulse width	250		ns

Switching Characteristics

VCC = 5 V

(Referenced to VCC = 5 V, VSS = 0 V, at Topr = –40 to 85 °C unless otherwise specified)

Table 5.23 Memory Expansion Mode and Microprocessor Mode (for setting with no wait)

Symbol	Parameter	Measuring Condition	Standard		Unit
			Min.	Max.	
$t_{d(BCLK-AD)}$	Address output delay time	Figure 5.2		25	ns
$t_{h(BCLK-AD)}$	Address output hold time (in relation to BCLK)		4		ns
$t_{h(RD-AD)}$	Address output hold time (in relation to RD)		0		ns
$t_{h(WR-AD)}$	Address output hold time (in relation to WR)		(NOTE 1)		ns
$t_{d(BCLK-CS)}$	Chip select output delay time			25	ns
$t_{h(BCLK-CS)}$	Chip select output hold time (in relation to BCLK)		4		ns
$t_{d(BCLK-ALE)}$	ALE signal output delay time			15	ns
$t_{h(BCLK-ALE)}$	ALE signal output hold time		–4		ns
$t_{d(BCLK-RD)}$	RD signal output delay time			25	ns
$t_{h(BCLK-RD)}$	RD signal output hold time		0		ns
$t_{d(BCLK-WR)}$	WR signal output delay time			25	ns
$t_{h(BCLK-WR)}$	WR signal output hold time		0		ns
$t_{d(BCLK-DB)}$	Data output delay time (in relation to BCLK)			40	ns
$t_{h(BCLK-DB)}$	Data output hold time (in relation to BCLK) (3)		4		ns
$t_{d(DB-WR)}$	Data output delay time (in relation to WR)		(NOTE 2)		ns
$t_{h(WR-DB)}$	Data output hold time (in relation to WR) (3)		(NOTE 1)		ns
$t_{d(BCLK-HLDA)}$	$\overline{HLDA}$ output delay time			40	ns

NOTES:

1. Calculated according to the BCLK frequency as follows:

$$\frac{0.5 \times 10^9}{f(BCLK)} - 10 \text{ [ns]}$$

2. Calculated according to the BCLK frequency as follows:

$$\frac{0.5 \times 10^9}{f(BCLK)} - 40 \text{ [ns]} \qquad f(BCLK) \text{ is 12.5 MHz or less.}$$

3. This standard value shows the timing when the output is off, and does not show hold time of data bus.
Hold time of data bus varies with capacitor volume and pull-up (pull-down) resistance value.
Hold time of data bus is expressed in
$t = -CR \times \ln(1 - V_{OL} / V_{CC})$
by a circuit of the right figure.
For example, when $V_{OL} = 0.2\ V_{CC}$, C = 30 pF, R = 1 kΩ, hold time of output "L" level is
$t = -30\text{ pF} \times 1\text{ k}\Omega \times \ln(1 - 0.2\ V_{CC} / V_{CC}) = 6.7$ ns.

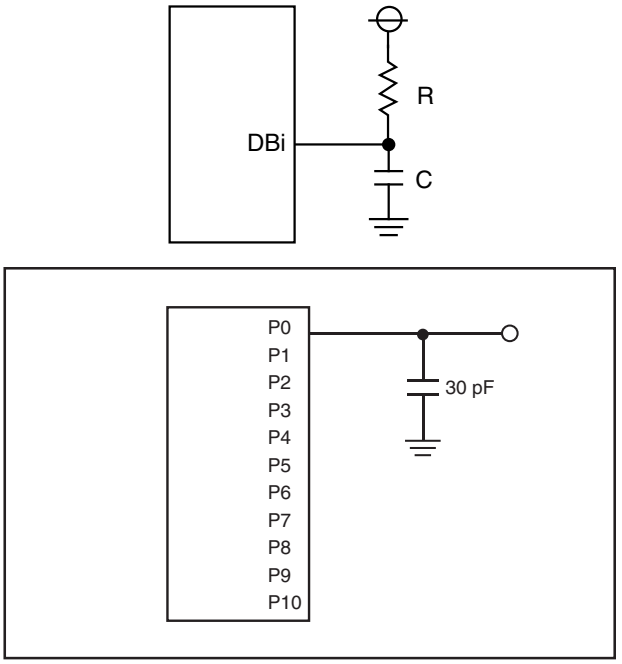

Figure 5.2 Port P0 to P10 Measurement Circuit

Switching Characteristics **VCC = 5 V**

(Referenced to VCC = 5 V, VSS = 0 V, at Topr = –40 to 85 °C unless otherwise specified)

Table 5.24 Memory Expansion Mode and Microprocessor Mode (for 1- to 3-wait setting and external area access)

Symbol	Parameter	Measuring Condition	Standard		Unit
			Min.	Max.	
$t_{d(BCLK-AD)}$	Address output delay time	Figure 5.2		25	ns
$t_{h(BCLK-AD)}$	Address output hold time (in relation to BCLK)		4		ns
$t_{h(RD-AD)}$	Address output hold time (in relation to RD)		0		ns
$t_{h(WR-AD)}$	Address output hold time (in relation to WR)		(NOTE 1)		ns
$t_{d(BCLK-CS)}$	Chip select output delay time			25	ns
$t_{h(BCLK-CS)}$	Chip select output hold time (in relation to BCLK)		4		ns
$t_{d(BCLK-ALE)}$	ALE signal output delay time			15	ns
$t_{h(BCLK-ALE)}$	ALE signal output hold time		–4		ns
$t_{d(BCLK-RD)}$	RD signal output delay time			25	ns
$t_{h(BCLK-RD)}$	RD signal output hold time		0		ns
$t_{d(BCLK-WR)}$	WR signal output delay time			25	ns
$t_{h(BCLK-WR)}$	WR signal output hold time		0		ns
$t_{d(BCLK-DB)}$	Data output delay time (in relation to BCLK)			40	ns
$t_{h(BCLK-DB)}$	Data output hold time (in relation to BCLK) (3)		4		ns
$t_{d(DB-WR)}$	Data output delay time (in relation to WR)		(NOTE 2)		ns
$t_{h(WR-DB)}$	Data output hold time (in relation to WR) (3)		(NOTE 1)		ns
$t_{d(BCLK-HLDA)}$	$\overline{HLDA}$ output delay time			40	ns

NOTES:

1. Calculated according to the BCLK frequency as follows:

$$\frac{0.5 \times 10^9}{f(BCLK)} - 10 \text{ [ns]}$$

2. Calculated according to the BCLK frequency as follows:

$$\frac{(n - 0.5) \times 10^9}{f(BCLK)} - 40 \text{ [ns]}$$

n is “1” for 1-wait setting, “2” for 2-wait setting and “3” for 3-wait setting. When n = 1, f(BCLK) is 12.5 MHz or less.

3. This standard value shows the timing when the output is off, and does not show hold time of data bus.
Hold time of data bus varies with capacitor volume and pull-up (pull-down) resistance value.
Hold time of data bus is expressed in
$t = -CR \times \ln(1 - V_{OL} / V_{CC})$
by a circuit of the right figure.
For example, when $V_{OL} = 0.2\ V_{CC}$, C = 30 pF, R =1 kΩ, hold time of output “L” level is
$t = -30\text{ pF} \times 1\text{ k}\Omega \times \ln(1 - 0.2\ V_{CC} / V_{CC}) = 6.7\text{ ns}$.

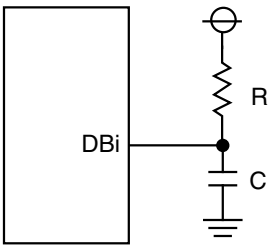

Switching Characteristics **VCC = 5 V**

(Referenced to VCC = 5 V, VSS = 0 V, at Topr = –40 to 85 °C unless otherwise specified)

Table 5.25 Memory Expansion Mode and Microprocessor Mode (for 2- to 3-wait setting, external area access and multiplexed bus selection)

Symbol	Parameter	Measuring Condition	Standard		Unit
			Min.	Max.	
$t_{d(BCLK-AD)}$	Address output delay time	Figure 5.2		25	ns
$t_{h(BCLK-AD)}$	Address output hold time (in relation to BCLK)		4		ns
$t_{h(RD-AD)}$	Address output hold time (in relation to RD)		(NOTE 1)		ns
$t_{h(WR-AD)}$	Address output hold time (in relation to WR)		(NOTE 1)		ns
$t_{d(BCLK-CS)}$	Chip select output delay time			25	ns
$t_{h(BCLK-CS)}$	Chip select output hold time (in relation to BCLK)		4		ns
$t_{h(RD-CS)}$	Chip select output hold time (in relation to RD)		(NOTE 1)		ns
$t_{h(WR-CS)}$	Chip select output hold time (in relation to WR)		(NOTE 1)		ns
$t_{d(BCLK-RD)}$	RD signal output delay time			25	ns
$t_{h(BCLK-RD)}$	RD signal output hold time		0		ns
$t_{d(BCLK-WR)}$	WR signal output delay time			25	ns
$t_{h(BCLK-WR)}$	WR signal output hold time		0		ns
$t_{d(BCLK-DB)}$	Data output delay time (in relation to BCLK)			40	ns
$t_{h(BCLK-DB)}$	Data output hold time (in relation to BCLK)		4		ns
$t_{d(DB-WR)}$	Data output delay time (in relation to WR)		(NOTE 2)		ns
$t_{h(WR-DB)}$	Data output hold time (in relation to WR)		(NOTE 1)		ns
$t_{d(BCLK-HLDA)}$	$\overline{HLDA}$ output delay time			40	ns
$t_{d(BCLK-ALE)}$	ALE signal output delay time (in relation to BCLK)			15	ns
$t_{h(BCLK-ALE)}$	ALE signal output hold time (in relation to BCLK)		–4		ns
$t_{d(AD-ALE)}$	ALE signal output delay time (in relation to Address)		(NOTE 3)		ns
$t_{h(ALE-AD)}$	ALE signal output hold time (in relation to Address)		(NOTE 4)		ns
$t_{d(AD-RD)}$	RD signal output delay from the end of Address		0		ns
$t_{d(AD-WR)}$	WR signal output delay from the end of Address		0		ns
$t_{dZ(RD-AD)}$	Address output floating start time			8	ns

NOTES:

1. Calculated according to the BCLK frequency as follows:

$$\frac{0.5 \times 10^9}{f(BCLK)} - 10 \text{ [ns]}$$

2. Calculated according to the BCLK frequency as follows:

$$\frac{(n - 0.5) \times 10^9}{f(BCLK)} - 40 \text{ [ns]}$$

n is “2” for 2-wait setting, “3” for 3-wait setting.

3. Calculated according to the BCLK frequency as follows:

$$\frac{0.5 \times 10^9}{f(BCLK)} - 25 \text{ [ns]}$$

4. Calculated according to the BCLK frequency as follows:

$$\frac{0.5 \times 10^9}{f(BCLK)} - 15 \text{ [ns]}$$

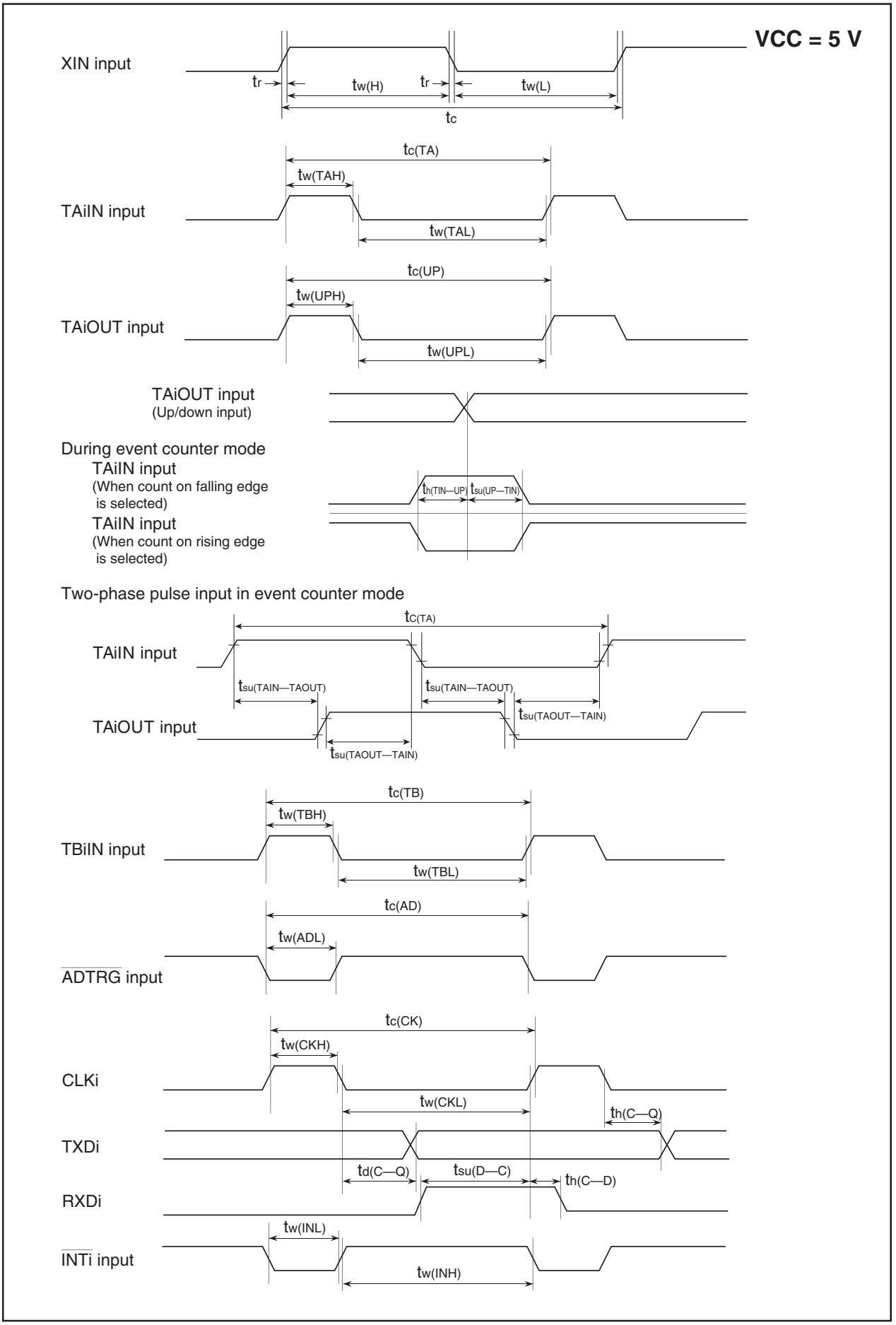

Figure 5.3 Timing Diagram (1)

Memory Expansion Mode and Microprocessor Mode **VCC = 5 V**

(Effective for setting with wait)

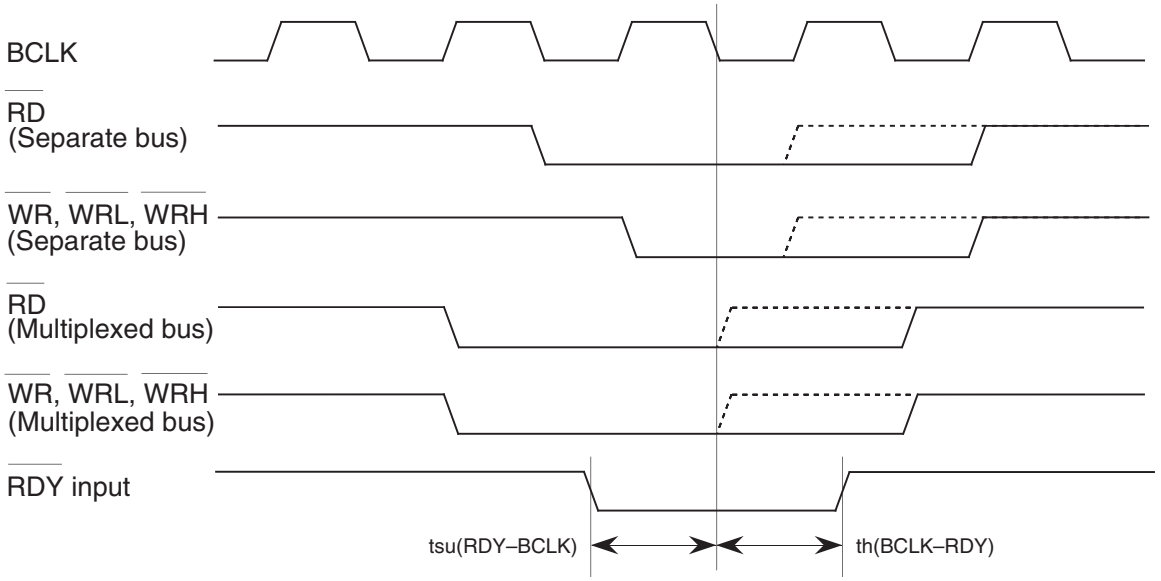

(Common to setting with wait and setting without wait)

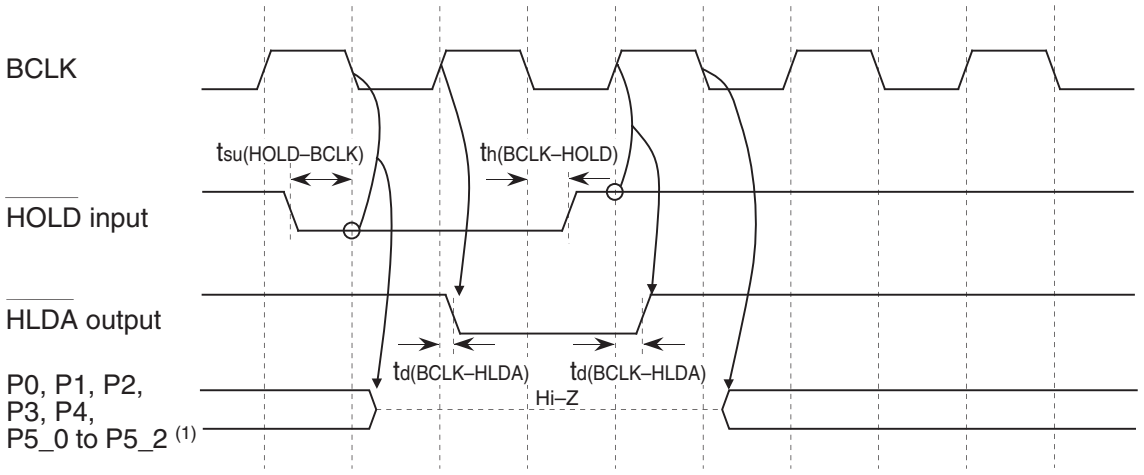

NOTE:
1. The above pins are set to high-impedance regardless of the input level of the BYTE pin, the PM06 bit in the PM0 register, and the PM11 bit in the PM1 register.

Measuring conditions :
- VCC = 5 V
- Input timing voltage : Determined with V_{IL} = 1.0 V, V_{IH} = 4.0 V
- Output timing voltage: Determined with V_{OL} = 2.5 V, V_{OH} = 2.5 V

Figure 5.4 Timing Diagram (2)

Memory Expansion Mode and Microprocessor Mode

VCC = 5 V

(For setting with no wait)

Read timing

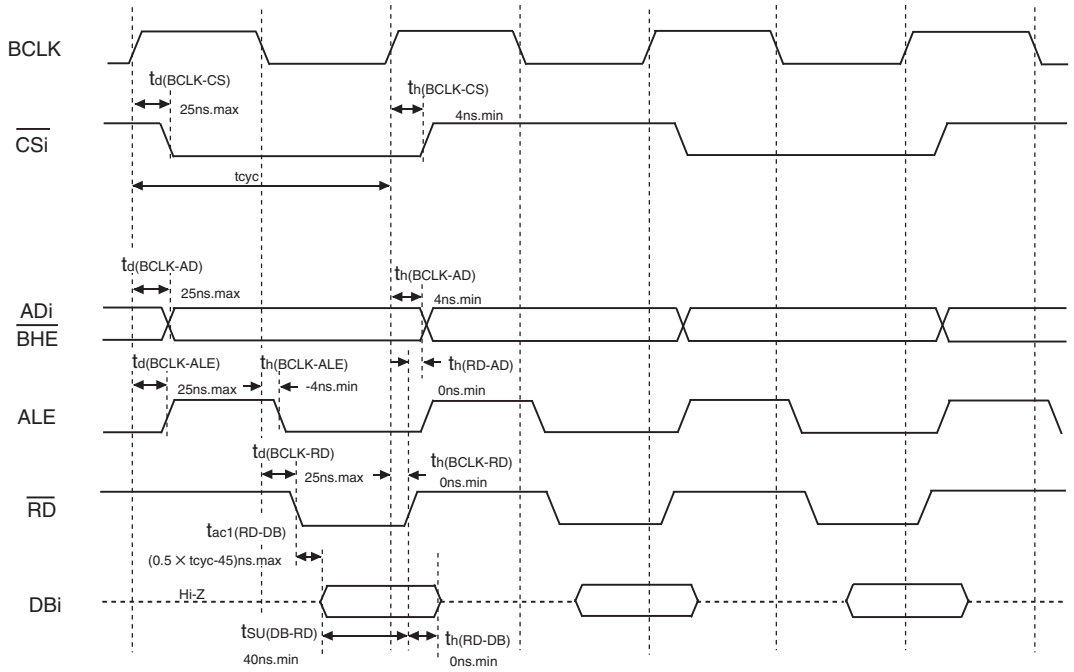

Write timing

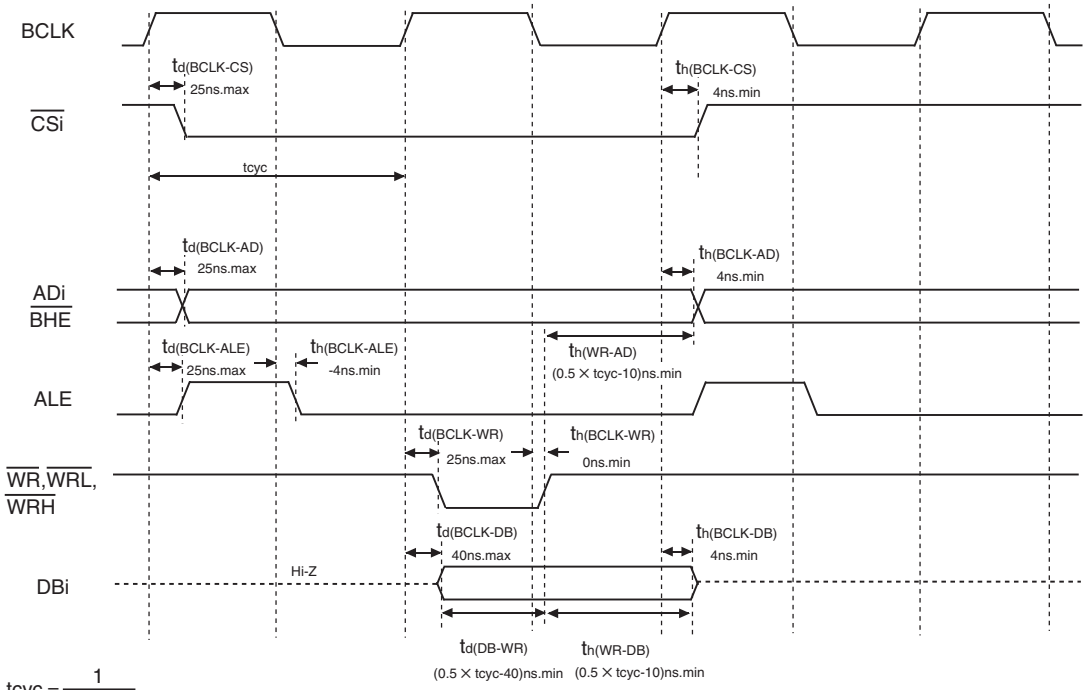

$$tcyc = \frac{1}{f(BCLK)}$$

Measuring conditions :

- VCC = 5 V
- Input timing voltage : V_{IL} = 0.8 V, V_{IH} = 2.0 V
- Output timing voltage : V_{OL} = 0.4 V, V_{OH} = 2.4 V

Figure 5.5 Timing Diagram (3)

Memory Expansion Mode and Microprocessor Mode

VCC = 5 V

(For 1-wait setting and external area access)

Read timing

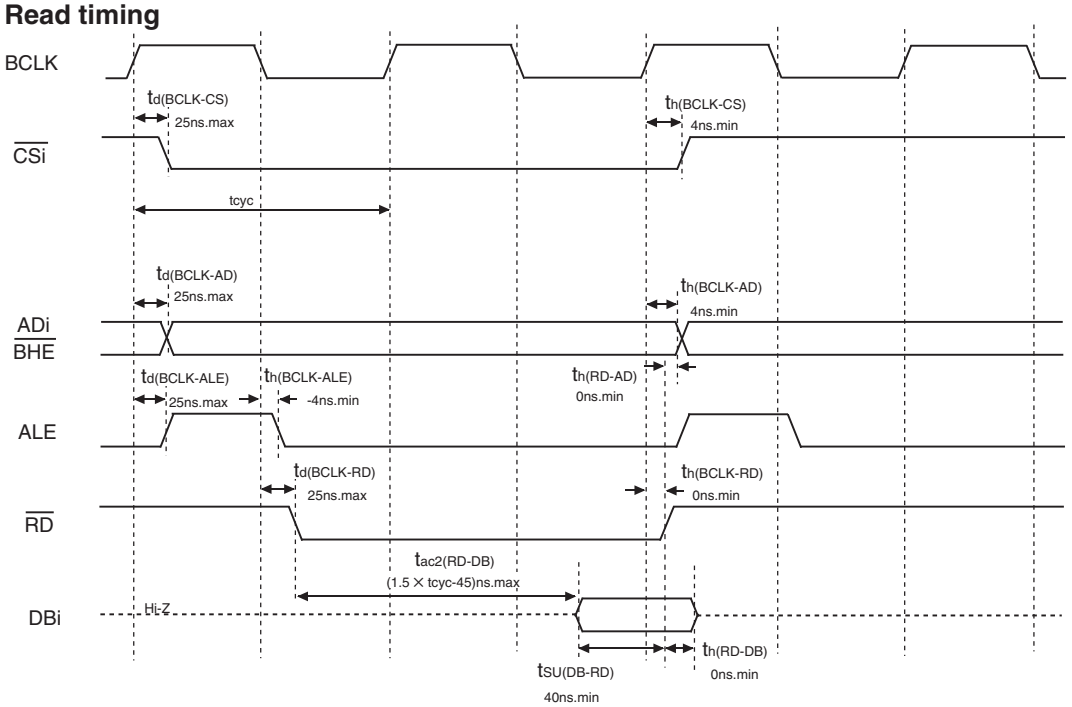

Write timing

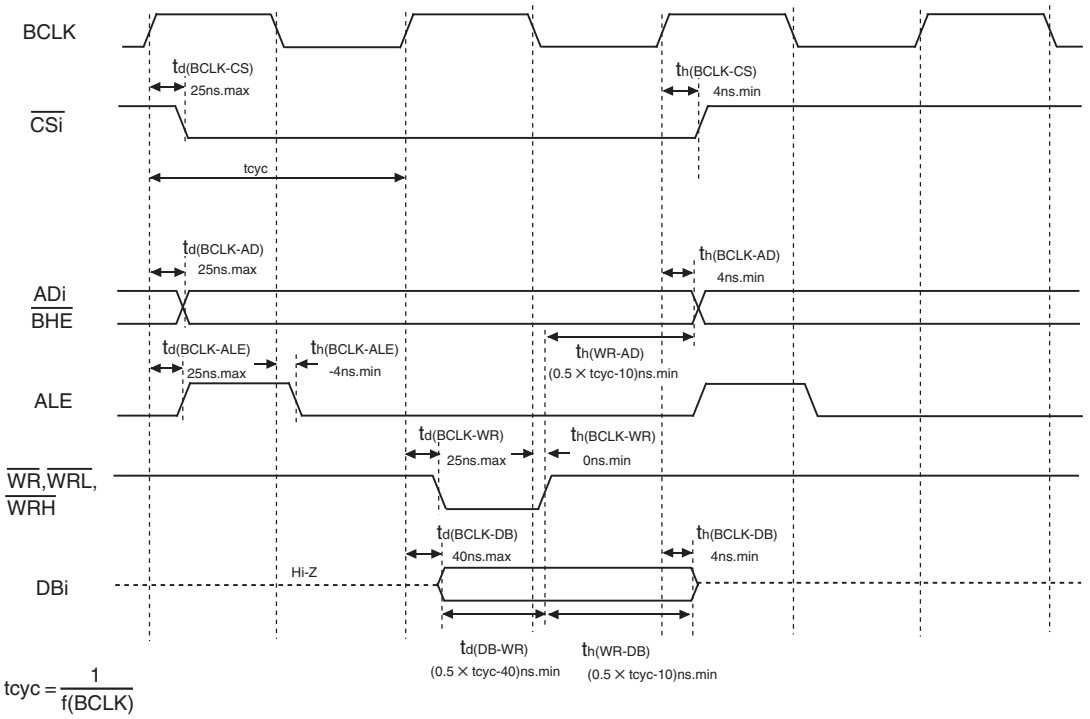

$$tcyc = \frac{1}{f(BCLK)}$$

Measuring conditions :
- VCC = 5 V
- Input timing voltage : V_{IL} = 0.8 V, V_{IH} = 2.0 V
- Output timing voltage : V_{OL} = 0.4 V, V_{OH} = 2.4 V

Figure 5.6 Timing Diagram (4)

Memory Expansion Mode and Microprocessor Mode

VCC = 5 V

(For 2-wait setting and external area access)

Read timing

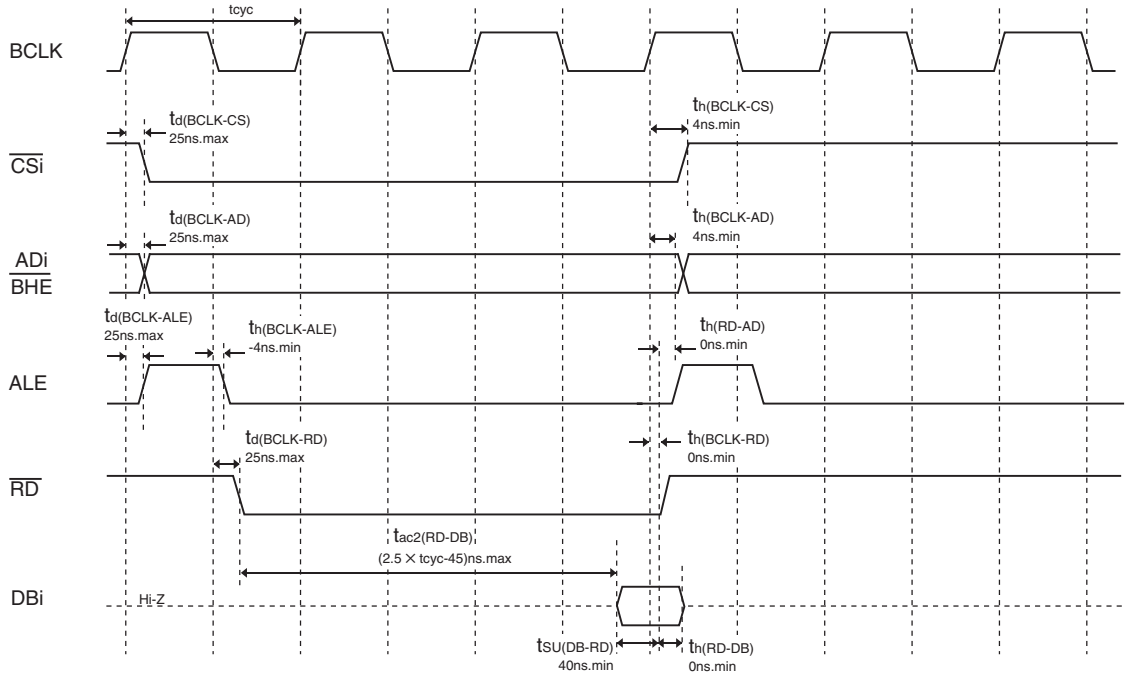

Write timing

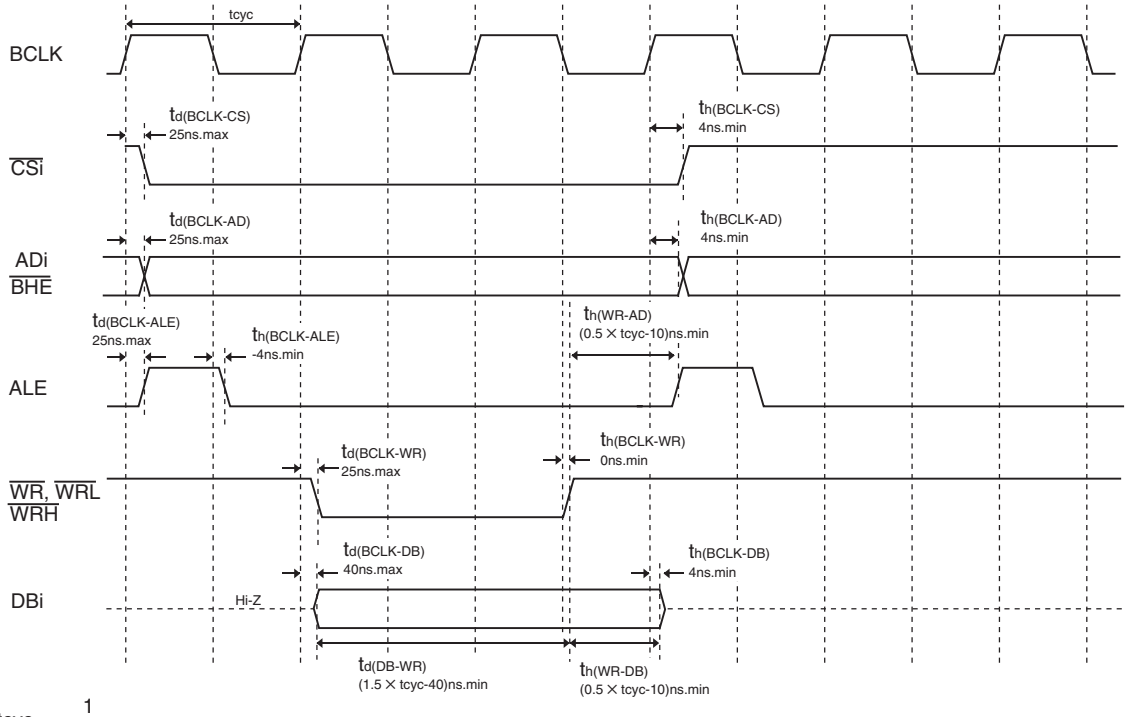

$$tcyc = \frac{1}{f(BCLK)}$$

Measuring conditions :

- VCC = 5 V
- Input timing voltage : V_{IL} = 0.8 V, V_{IH} = 2.0 V
- Output timing voltage : V_{OL} = 0.4 V, V_{OH} = 2.4 V

Figure 5.7 Timing Diagram (5)

Memory Expansion Mode and Microprocessor Mode

VCC = 5 V

(For 3-wait setting and external area access)

Read timing

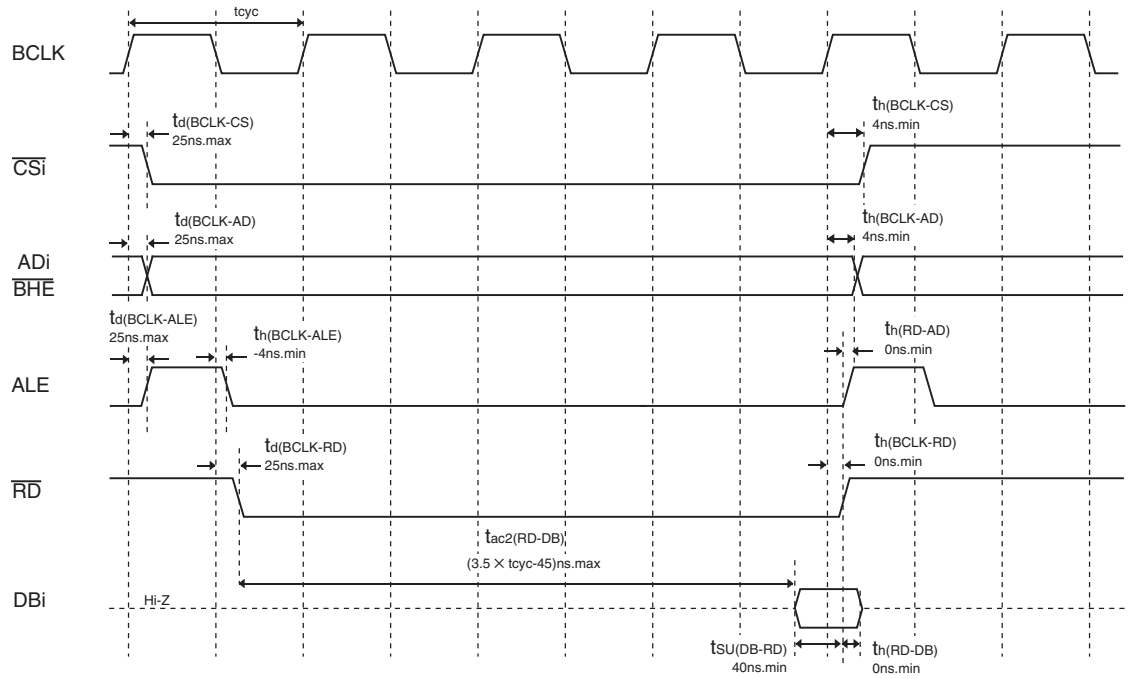

Write timing

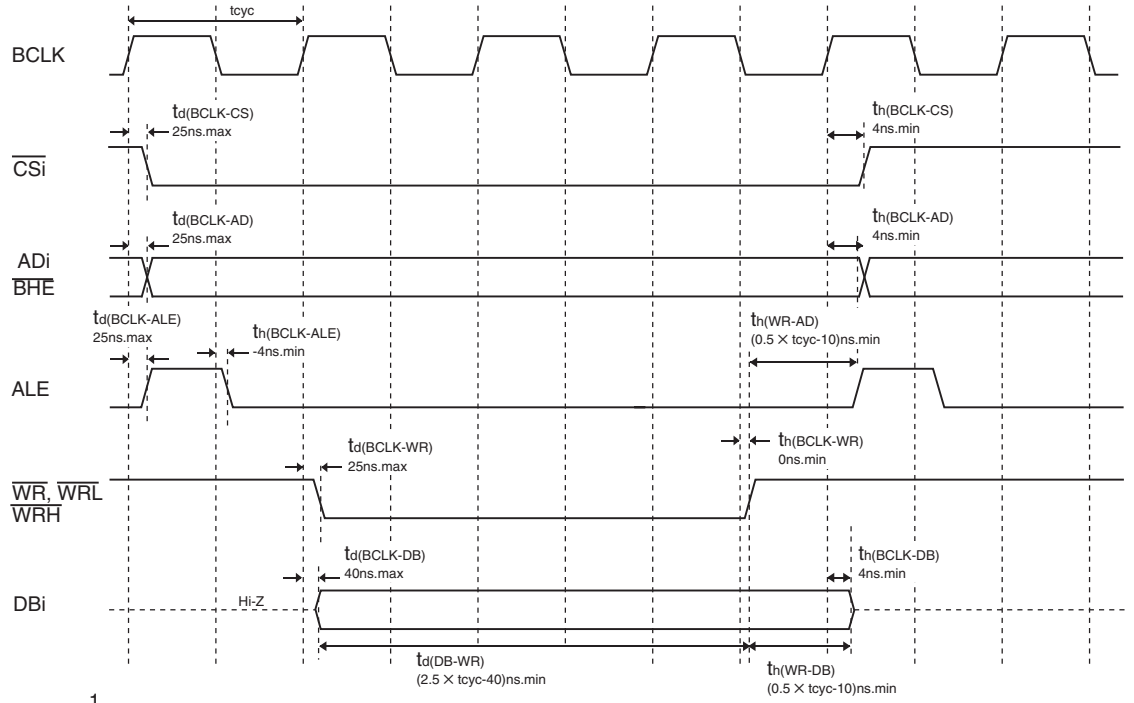

$$tcyc = \frac{1}{f(BCLK)}$$

Measuring conditions :

- VCC = 5 V
- Input timing voltage : V_{IL} = 0.8 V, V_{IH} = 2.0 V
- Output timing voltage : V_{OL} = 0.4 V, V_{OH} = 2.4 V

Figure 5.8 Timing Diagram (6)

Memory Expansion Mode and Microprocessor Mode — VCC = 5 V

(For 1- or 2-wait setting, external area access and multiplexed bus selection)

Read timing

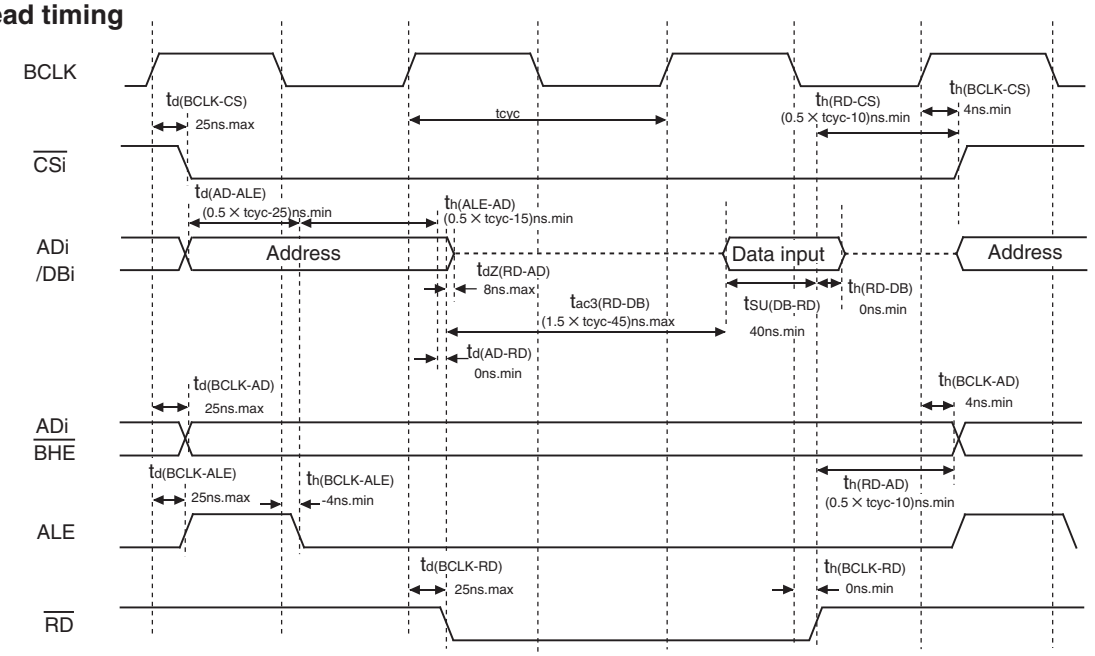

Write timing

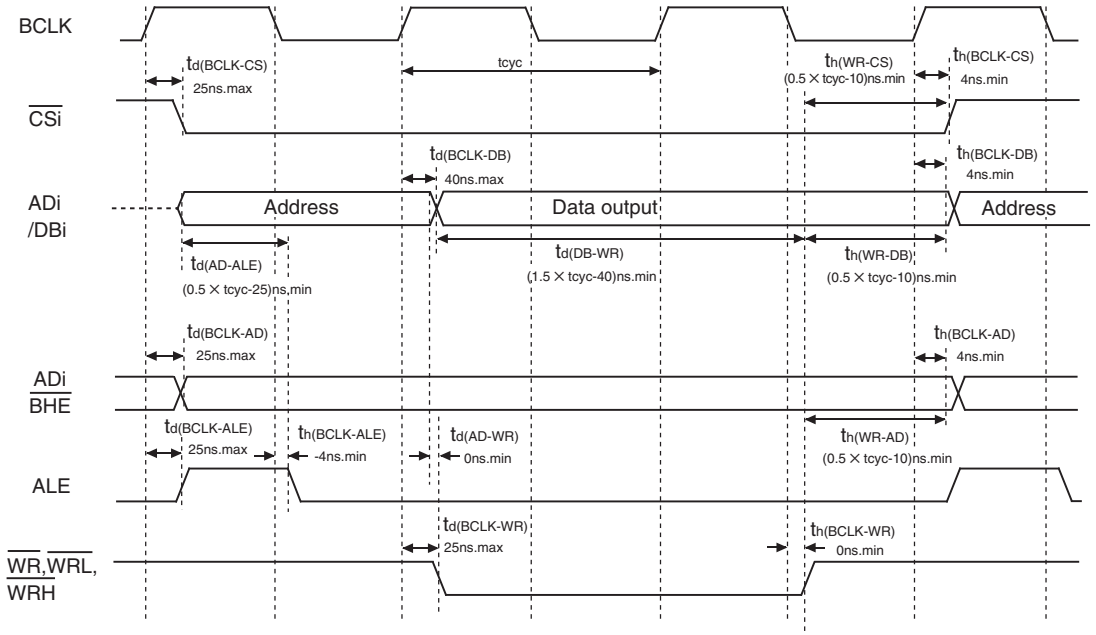

$$tcyc = \frac{1}{f(BCLK)}$$

Measuring conditions :
- VCC = 5 V
- Input timing voltage : V_{IL} = 0.8 V, V_{IH} = 2.0 V
- Output timing voltage : V_{OL} = 0.4 V, V_{OH} = 2.4 V

Figure 5.9 Timing Diagram (7)

Memory Expansion Mode and Microprocessor Mode

VCC = 5 V

(For 3-wait setting, external area access and multiplexed bus selection)

Read timing

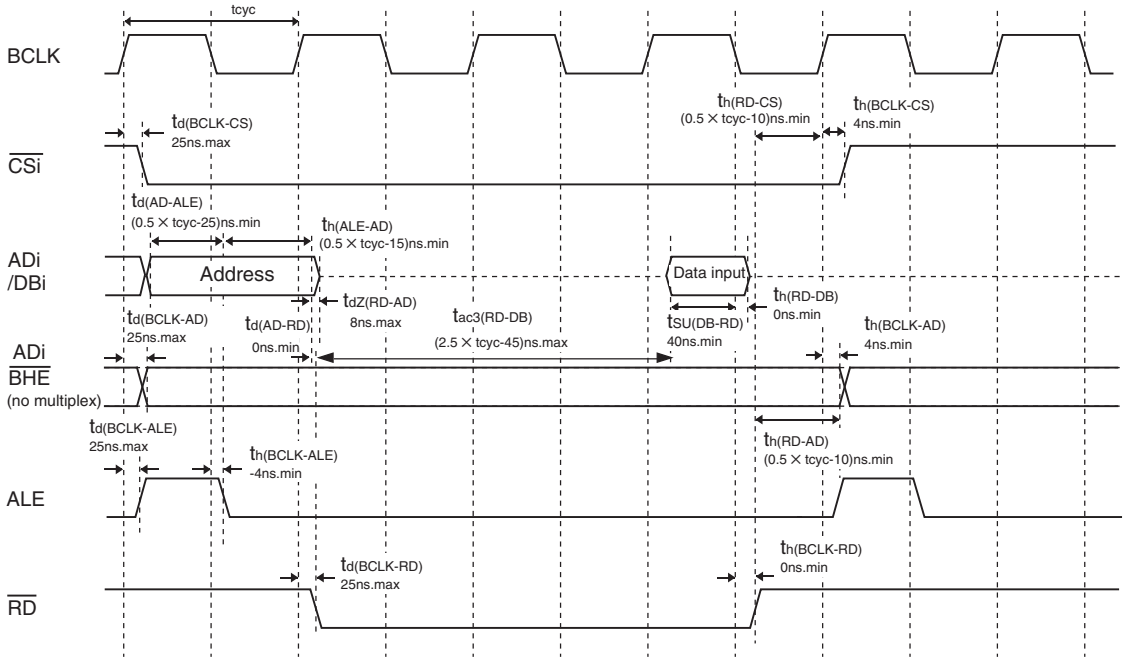

Write timing

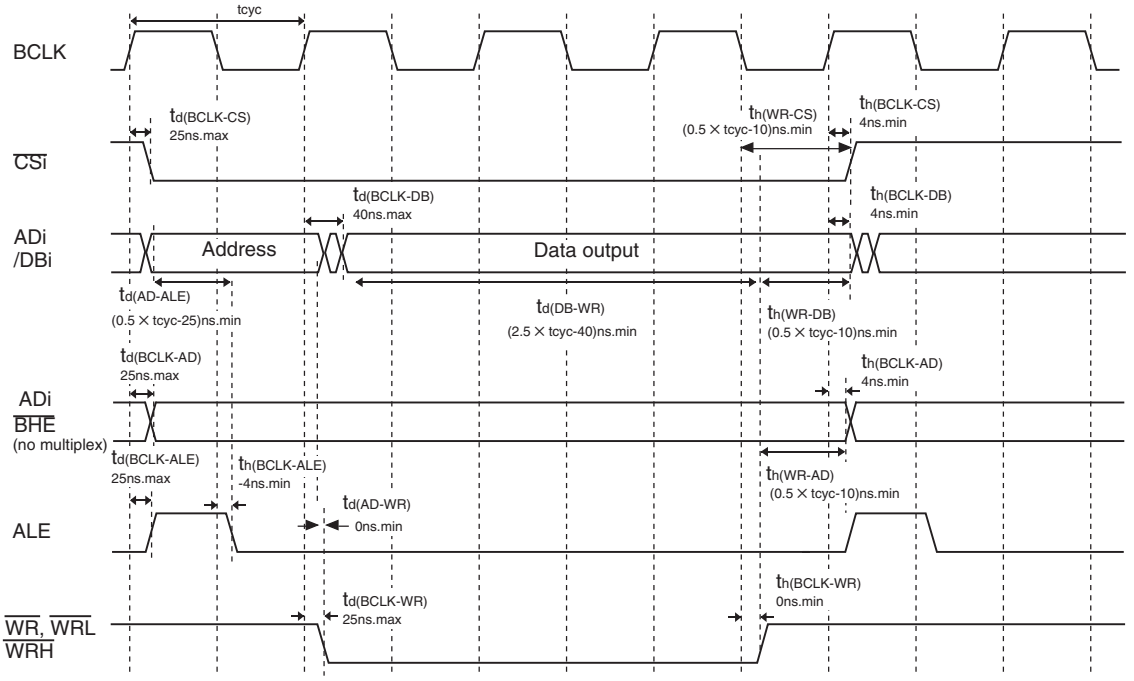

$$tcyc = \frac{1}{f(BCLK)}$$

Measuring conditions :

- VCC = 5 V
- Input timing voltage : V_{IL} = 0.8 V, V_{IH} = 2.0 V
- Output timing voltage : V_{OL} = 0.4 V, V_{OH} = 2.4 V

Figure 5.10 Timing Diagram (8)

5.2 Electrical Characteristics (Normal-ver.)

Table 5.26 Absolute Maximum Ratings

Symbol	Parameter		Condition	Rated Value	Unit
V_{CC}	Supply voltage (VCC1 = VCC2)		VCC = AVCC	–0.3 to 6.5	V
AV_{CC}	Analog supply voltage		VCC = AVCC	–0.3 to 6.5	V
V_I	Input voltage	$\overline{RESET}$, CNVSS, BYTE, P0_0 to P0_7, P1_0 to P1_7, P2_0 to P2_7, P3_0 to P3_7, P4_0 to P4_7, P5_0 to P5_7, P6_0 to P6_7, P7_0, P7_2 to P7_7, P8_0 to P8_7, P9_0, P9_2 to P9_7, P10_0 to P10_7, VREF, XIN		–0.3 to VCC+0.3	V
		P7_1, P9_1		–0.3 to 6.5	V
V_O	Output voltage	P0_0 to P0_7, P1_0 to P1_7, P2_0 to P2_7, P3_0 to P3_7, P4_0 to P4_7, P5_0 to P5_7, P6_0 to P6_7, P7_0, P7_2 to P7_7, P8_0 to P8_4, P8_6, P8_7, P9_0, P9_2 to P9_7, P10_0 to P10_7, XOUT		–0.3 to VCC+0.3	V
		P7_1, P9_1		–0.3 to 6.5	V
P_d	Power dissipation		Topr = 25°C	700	mW
T_{opr}	Operating ambient temperature	During MCU operation		–40 to 85	°C
		During flash memory program and erase operation		0 to 60	
T_{stg}	Storage temperature			–65 to 150	°C

Table 5.27 Recommended Operating Conditions (1) [1]

Symbol	Parameter		Standard			Unit
			Min.	Typ.	Max.	
V_{CC}	Supply voltage (VCC1 = VCC2)		3.0	5.0	5.5	V
AV_{CC}	Analog supply voltage			V_{CC}		V
V_{SS}	Supply voltage			0		V
AV_{SS}	Analog supply voltage			0		V
V_{IH}	HIGH input voltage	P3_1 to P3_7, P4_0 to P4_7, P5_0 to P5_7, P6_0 to P6_7, P7_0, P7_2 to P7_7, P8_0 to P8_7, P9_0, P9_2 to P9_7, P10_0 to P10_7, XIN, $\overline{RESET}$, CNVSS, BYTE	0.8 V_{CC}		V_{CC}	V
		P7_1, P9_1	0.8 V_{CC}		6.5	V
		P0_0 to P0_7, P1_0 to P1_7, P2_0 to P2_7, P3_0 (During single-chip mode)	0.8 V_{CC}		V_{CC}	V
		P0_0 to P0_7, P1_0 to P1_7, P2_0 to P2_7, P3_0 (Data input during memory expansion and microprocessor modes)	0.5 V_{CC}		V_{CC}	V
V_{IL}	LOW input voltage	P3_1 to P3_7, P4_0 to P4_7, P5_0 to P5_7, P6_0 to P6_7, P7_0 to P7_7, P8_0 to P8_7, P9_0 to P9_7, P10_0 to P10_7, XIN, $\overline{RESET}$, CNVSS, BYTE	0		0.2 V_{CC}	V
		P0_0 to P0_7, P1_0 to P1_7, P2_0 to P2_7, P3_0 (During single-chip mode)	0		0.2 V_{CC}	V
		P0_0 to P0_7, P1_0 to P1_7, P2_0 to P2_7, P3_0 (Data input during memory expansion and microprocessor modes)	0		0.16 V_{CC}	V
$I_{OH(peak)}$	HIGH peak output current	P0_0 to P0_7, P1_0 to P1_7, P2_0 to P2_7, P3_0 to P3_7, P4_0 to P4_7, P5_0 to P5_7, P6_0 to P6_7, P7_0, P7_2 to P7_7, P8_0 to P8_4, P8_6, P8_7, P9_0, P9_2 to P9_7, P10_0 to P10_7			–10.0	mA
$I_{OH(avg)}$	HIGH average output current	P0_0 to P0_7, P1_0 to P1_7, P2_0 to P2_7, P3_0 to P3_7, P4_0 to P4_7, P5_0 to P5_7, P6_0 to P6_7, P7_0, P7_2 to P7_7, P8_0 to P8_4, P8_6, P8_7, P9_0, P9_2 to P9_7, P10_0 to P10_7			–5.0	mA
$I_{OL(peak)}$	LOW peak output current	P0_0 to P0_7, P1_0 to P1_7, P2_0 to P2_7, P3_0 to P3_7, P4_0 to P4_7, P5_0 to P5_7, P6_0 to P6_7, P7_0 to P7_7, P8_0 to P8_4, P8_6, P8_7, P9_0 to P9_7, P10_0 to P10_7			10.0	mA
$I_{OL(avg)}$	LOW average output current	P0_0 to P0_7, P1_0 to P1_7, P2_0 to P2_7, P3_0 to P3_7, P4_0 to P4_7, P5_0 to P5_7, P6_0 to P6_7, P7_0 to P7_7, P8_0 to P8_4, P8_6, P8_7, P9_0 to P9_7, P10_0 to P10_7			5.0	mA

NOTES:

1. Referenced to VCC = 3.0 to 5.5 V at Topr = –40 to 85°C unless otherwise specified.
2. Average output current values during 100 ms period.
3. The total $I_{OL(peak)}$ for ports P0, P1, P2, P8_6, P8_7, P9, and P10 must be 80 mA max.
   The total $I_{OL(peak)}$ for ports P3, P4, P5, P6, P7, and P8_0 to P8_4 must be 80 mA max.
   The total $I_{OH(peak)}$ for ports P0, P1, and P2 must be –40 mA max.
   The total $I_{OH(peak)}$ for ports P3, P4, and P5 must be –40 mA max.
   The total $I_{OH(peak)}$ for ports P6, P7, and P8_0 to P8_4 must be –40 mA max.
   The total $I_{OH(peak)}$ for ports P8_6, P8_7, P9, and P10 must be –40 mA max.

Table 5.28 Recommended Operating Conditions (2) (1)

Symbol	Parameter				Standard			Unit
					Min.	Typ.	Max.	
f(XIN)	Main clock input oscillation frequency (2) (3) (4)	No wait	Mask ROM version Flash memory version	VCC = 3.0 to 5.5 V	0		16	MHz
f(XCIN)	Sub clock oscillation frequency					32.768	50	kHz
f(Ring)	On-chip oscillation frequency					1		MHz
f(PLL)	PLL clock oscillation frequency				16		24	MHz
f(BCLK)	CPU operation clock			VCC = 3.0 to 5.5 V	0		24	MHz
$t_{su(PLL)}$	PLL frequency synthesizer stabilization wait time						20	ms

NOTES:

1. Referenced to VCC = 3.0 to 5.5 V at Topr = –40 to 85°C unless otherwise specified.
2. Relationship between main clock oscillation frequency and supply voltage is shown right.
3. Execute program/erase of flash memory by VCC = 3.3 ± 0.3 V or VCC = 5.0 ± 0.5 V.
4. When using over 16 MHz, use PLL clock. PLL clock oscillation frequency which can be used is 16 MHz, 20 MHz or 24 MHz.

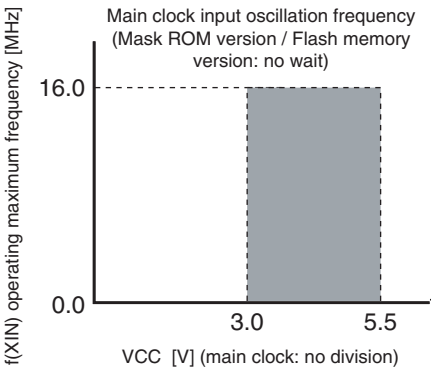

Table 5.29 A/D Conversion Characteristics (1)

Symbol	Parameter		Measuring Condition		Standard Min.	Standard Typ.	Standard Max.	Unit
–	Resolution		VREF = VCC				10	Bit
INL	Integral nonlinearity error	10 bits	VREF = VCC = 5 V	ANEX0, ANEX1 input, AN0 to AN7 input, AN0_0 to AN0_7 input, AN2_0 to AN2_7 input			±3	LSB
				External operation amp connection mode			±7	LSB
			VREF = VCC = 3.3 V	ANEX0, ANEX1 input, AN0 to AN7 input, AN0_0 to AN0_7 input, AN2_0 to AN2_7 input			±5	LSB
				External operation amp connection mode			±7	LSB
		8 bits	VREF = AVCC = VCC = 5.0 V, 3.3 V				±2	LSB
–	Absolute accuracy	10 bits	VREF = VCC = 5 V	ANEX0, ANEX1 input, AN0 to AN7 input, AN0_0 to AN0_7 input, AN2_0 to AN2_7 input			±3	LSB
				External operation amp connection mode			±7	LSB
			VREF = VCC = 3.3 V	ANEX0, ANEX1 input, AN0 to AN7 input, AN0_0 to AN0_7 input, AN2_0 to AN2_7 input			±5	LSB
				External operation amp connection mode			±7	LSB
		8 bits	VREF = AVCC = VCC = 5.0 V, 3.3 V				±2	LSB
DNL	Differential nonlinearity error						±1	LSB
–	Offset error						±3	LSB
–	Gain error						±3	LSB
R_{LADDER}	Resistor ladder		VREF = VCC		10		40	kΩ
t_{CONV}	10-bit conversion time, sample & hold available		VREF = VCC = 5 V, ϕAD = 10 MHz		3.3			μs
	8-bit conversion time, sample & hold available		VREF = VCC = 5 V, ϕAD = 10 MHz		2.8			μs
t_{SAMP}	Sampling time				0.3			μs
V_{REF}	Reference voltage				2.0		V_{CC}	V
V_{IA}	Analog input voltage				0		V_{REF}	V

NOTES:
1. Referenced to VCC = AVCC = VREF = 3.3 to 5.5 V, VSS = AVSS = 0 V, –40 to 85°C unless otherwise specified.
2. ϕAD frequency must be 10 MHz or less.
3. When sample & hold is disabled, ϕAD frequency must be 250 kHz or more in addition to a limit of NOTE 2.
   When sample & hold is enabled, ϕAD frequency must be 1 MHz or more in addition to a limit of NOTE 2.

Table 5.30 D/A conversion Characteristics (1)

Symbol	Parameter	Measuring Condition	Standard Min.	Standard Typ.	Standard Max.	Unit
–	Resolution				8	Bits
–	Absolute accuracy				1.0	%
t_{su}	Setup time				3	μs
R_O	Output resistance		4	10	20	kΩ
I_{VREF}	Reference power supply input current	(NOTE 2)			1.5	mA

NOTES:
1. Referenced to VCC = AVCC = VREF = 3.3 to 5.5 V, VSS = AVSS = 0 V, –40 to 85°C unless otherwise specified.
2. This applies when using one D/A converter, with the DAi register (i = 0, 1) for the unused D/A converter set to 00h.
   The resistor ladder of the A/D converter is not included. Also, the current I_{VREF} always flows even though VREF may have been set to be unconnected by the ADCON1 register.

Table 5.31 Power Supply Circuit Timing Characteristics

Symbol	Parameter	Measuring Condition	Standard			Unit
			Min.	Typ.	Max.	
$t_{d(P-R)}$	Time for internal power supply stabilization during powering-on	VCC = 3.0 to 5.5 V			2	ms
$t_{d(R-S)}$	STOP release time				150	μs
$t_{d(W-S)}$	Low power dissipation mode wait mode release time				150	μs

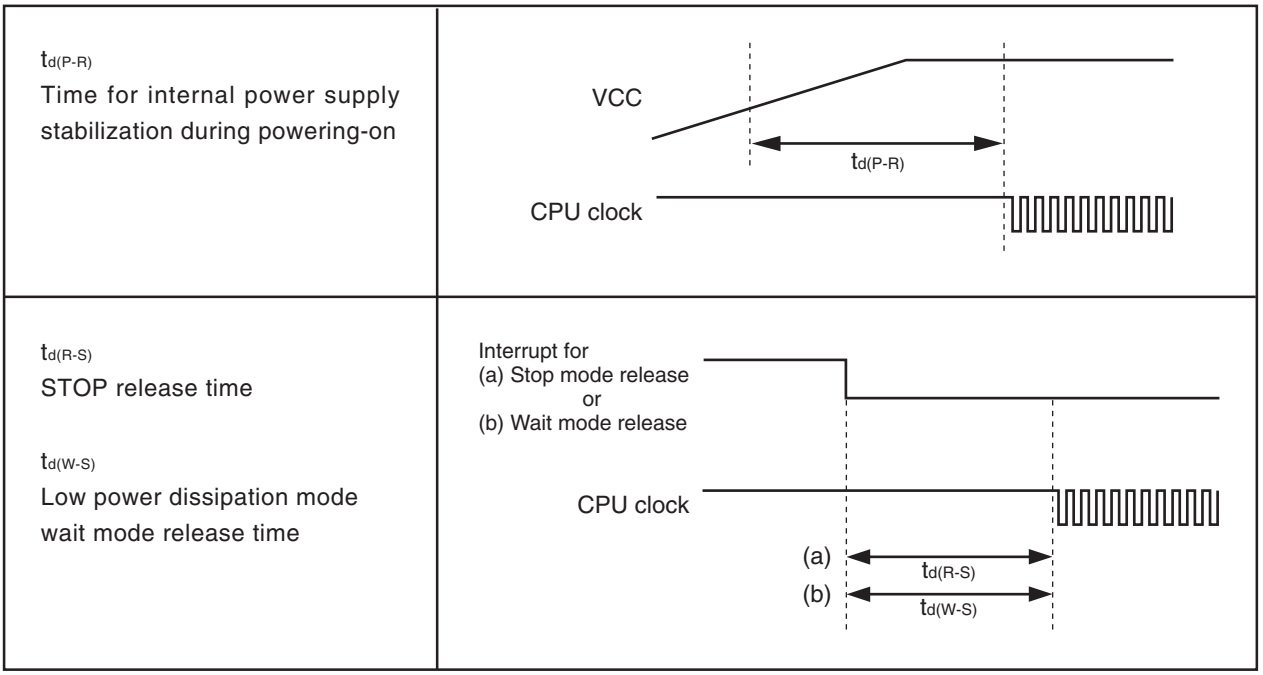

Figure 5.11 Power Supply Circuit Timing Diagram

Table 5.32 Electrical Characteristics (1) [1] **VCC = 5V**

Symbol	Parameter			Measuring Condition	Standard Min.	Standard Typ.	Standard Max.	Unit
V_{OH}	HIGH output voltage	P0_0 to P0_7, P1_0 to P1_7, P2_0 to P2_7, P3_0 to P3_7, P4_0 to P4_7, P5_0 to P5_7, P6_0 to P6_7, P7_0, P7_2 to P7_7, P8_0 to P8_4, P8_6, P8_7, P9_0, P9_2 to P9_7, P10_0 to P10_7		I_{OH} = –5 mA	V_{CC}-2.0		V_{CC}	V
V_{OH}	HIGH output voltage	P0_0 to P0_7, P1_0 to P1_7, P2_0 to P2_7, P3_0 to P3_7, P4_0 to P4_7, P5_0 to P5_7, P6_0 to P6_7, P7_0, P7_2 to P7_7, P8_0 to P8_4, P8_6, P8_7, P9_0, P9_2 to P9_7, P10_0 to P10_7		I_{OH} = –200 μA	V_{CC}-0.3		V_{CC}	V
V_{OH}	HIGH output voltage	XOUT	HIGHPOWER	I_{OH} = –1 mA	3.0		V_{CC}	V
			LOWPOWER	I_{OH} = –0.5 mA	3.0		V_{CC}	
	HIGH output voltage	XCOUT	HIGHPOWER	With no load applied		2.5		V
			LOWPOWER	With no load applied		1.6		
V_{OL}	LOW output voltage	P0_0 to P0_7, P1_0 to P1_7, P2_0 to P2_7, P3_0 to P3_7, P4_0 to P4_7, P5_0 to P5_7, P6_0 to P6_7, P7_0 to P7_7, P8_0 to P8_4, P8_6, P8_7, P9_0 to P9_7, P10_0 to P10_7		I_{OL} = 5 mA			2.0	V
V_{OL}	LOW output voltage	P0_0 to P0_7, P1_0 to P1_7, P2_0 to P2_7, P3_0 to P3_7, P4_0 to P4_7, P5_0 to P5_7, P6_0 to P6_7, P7_0 to P7_7, P8_0 to P8_4, P8_6, P8_7, P9_0 to P9_7, P10_0 to P10_7		I_{OL} = 200 μA			0.45	V
V_{OL}	LOW output voltage	XOUT	HIGHPOWER	I_{OL} = 1 mA			2.0	V
			LOWPOWER	I_{OL} = 0.5 mA			2.0	
	LOW output voltage	XCOUT	HIGHPOWER	With no load applied		0		V
			LOWPOWER	With no load applied		0		
V_{T+}-V_{T-}	Hysteresis	$\overline{HOLD}$, $\overline{RDY}$, TA0IN to TA4IN, TB0IN to TB5IN, $\overline{INT0}$ to $\overline{INT5}$, $\overline{NMI}$, $\overline{ADTRG}$, $\overline{CTS0}$ to $\overline{CTS2}$, SCL0 to SCL2, SDA0 to SDA2, CLK0 to CLK3, TA0OUT to TA4OUT, $\overline{KI0}$ to $\overline{KI3}$, RXD0 to RXD2, SIN3			0.2		1.0	V
V_{T+}-V_{T-}	Hysteresis	$\overline{RESET}$			0.2		2.5	V
I_{IH}	HIGH input current	P0_0 to P0_7, P1_0 to P1_7, P2_0 to P2_7, P3_0 to P3_7, P4_0 to P4_7, P5_0 to P5_7, P6_0 to P6_7, P7_0 to P7_7, P8_0 to P8_7, P9_0 to P9_7, P10_0 to P10_7, XIN, $\overline{RESET}$, CNVSS, BYTE		V_I = 5 V			5.0	μA
I_{IL}	LOW input current	P0_0 to P0_7, P1_0 to P1_7, P2_0 to P2_7, P3_0 to P3_7, P4_0 to P4_7, P5_0 to P5_7, P6_0 to P6_7, P7_0 to P7_7, P8_0 to P8_7, P9_0 to P9_7, P10_0 to P10_7, XIN, $\overline{RESET}$, CNVSS, BYTE		V_I = 0 V			–5.0	μA
R_{PULLUP}	Pull-up resistance	P0_0 to P0_7, P1_0 to P1_7, P2_0 to P2_7, P3_0 to P3_7, P4_0 to P4_7, P5_0 to P5_7, P6_0 to P6_7, P7_0, P7_2 to P7_7, P8_0 to P8_4, P8_6, P8_7, P9_0, P9_2 to P9_7, P10_0 to P10_7		V_I = 0 V	30	50	170	kΩ
R_{fXIN}	Feedback resistance	XIN				1.5		MΩ
R_{fXCIN}	Feedback resistance	XCIN				15		MΩ
V_{RAM}	RAM retention voltage			At stop mode	2.0			V

NOTES:

1. Referenced to VCC = 4.2 to 5.5 V, VSS = 0 V at Topr = –40 to 85°C, f(BCLK) = 24 MHz unless otherwise specified.

Table 5.33 Electrical Characteristics (2) [1]

Symbol	Parameter		Measuring Condition		Standard			Unit
					Min.	Typ.	Max.	
I_{CC}	Power supply current (VCC = 3.0 to 5.5 V)	In single-chip mode, the output pins are open and other pins are VSS.	Mask ROM	f(BCLK) = 24 MHz, PLL operation, No division		16	32	mA
				On-chip oscillation, No division		1		mA
			Flash memory	f(BCLK) = 24 MHz, PLL operation, No division		20	34	mA
				On-chip oscillation, No division		1.8		mA
			Flash memory program	f(BCLK) = 10 MHz, VCC = 5 V		15		mA
			Flash memory erase	f(BCLK) = 10 MHz, VCC = 5 V		25		mA
			Mask ROM	f(BCLK) = 32 kHz, Low power dissipation mode, ROM [2]		25		μA
			Flash memory	f(BCLK) = 32 kHz, Low power dissipation mode, RAM [2]		25		μA
				f(BCLK) = 32 kHz, Low power dissipation mode, Flash memory [2]		420		μA
			Mask ROM Flash memory	On-chip oscillation, Wait mode		50		μA
				f(BCLK) = 32 kHz, Wait mode [3], Oscillation capacity High		8.5		μA
				f(BCLK) = 32 kHz, Wait mode [3], Oscillation capacity Low		3.0		μA
				Stop mode, Topr = 25°C		0.8	3.0	μA

NOTES:
1. Referenced to VCC = 3.0 to 5.5 V, VSS = 0 V at Topr = –40 to 85°C, f(BCLK) = 24 MHz unless otherwise specified.
2. This indicates the memory in which the program to be executed exists.
3. With one timer operated using fC32.

Timing Requirements **VCC = 5 V**

(Referenced to VCC = 5 V, VSS = 0 V, at Topr = –40 to 85°C unless otherwise specified)

Table 5.34 External Clock Input (XIN Input)

Symbol	Parameter	Standard		Unit
		Min.	Max.	
t_c	External clock input cycle time	62.5		ns
$t_{w(H)}$	External clock input HIGH pulse width	25		ns
$t_{w(L)}$	External clock input LOW pulse width	25		ns
t_r	External clock rise time		15	ns
t_f	External clock fall time		15	ns

Table 5.35 Memory Expansion Mode and Microprocessor Mode

Symbol	Parameter	Standard		Unit
		Min.	Max.	
$t_{ac1(RD-DB)}$	Data input access time (for setting with no wait)		(NOTE 1)	ns
$t_{ac2(RD-DB)}$	Data input access time (for setting with wait)		(NOTE 2)	ns
$t_{ac3(RD-DB)}$	Data input access time (when accessing multiplexed bus area)		(NOTE 3)	ns
$t_{su(DB-RD)}$	Data input setup time	40		ns
$t_{su(RDY-BCLK)}$	$\overline{RDY}$ input setup time	30		ns
$t_{su(HOLD-BCLK)}$	$\overline{HOLD}$ input setup time	40		ns
$t_{h(RD-DB)}$	Data input hold time	0		ns
$t_{h(BCLK-RDY)}$	$\overline{RDY}$ input hold time	0		ns
$t_{h(BCLK-HOLD)}$	$\overline{HOLD}$ input hold time	0		ns

NOTES:

1. Calculated according to the BCLK frequency as follows:

$$\frac{0.5 \times 10^9}{f(BCLK)} - 45 \text{ [ns]}$$

2. Calculated according to the BCLK frequency as follows:

$$\frac{(n - 0.5) \times 10^9}{f(BCLK)} - 45 \text{ [ns]}$$

n is “2” for 1-wait setting, “3” for 2-wait setting and “4” for 3-wait setting.

3. Calculated according to the BCLK frequency as follows:

$$\frac{(n - 0.5) \times 10^9}{f(BCLK)} - 45 \text{ [ns]}$$

n is “2” for 2-wait setting, “3” for 3-wait setting.

Timing Requirements **VCC = 5 V**

(Referenced to VCC = 5 V, VSS = 0 V, at Topr = –40 to 85°C unless otherwise specified)

Table 5.36 Timer A Input (Counter Input in Event Counter Mode)

Symbol	Parameter	Standard		Unit
		Min.	Max.	
$t_{c(TA)}$	TAiIN input cycle time	100		ns
$t_{w(TAH)}$	TAiIN input HIGH pulse width	40		ns
$t_{w(TAL)}$	TAiIN input LOW pulse width	40		ns

Table 5.37 Timer A Input (Gating Input in Timer Mode)

Symbol	Parameter	Standard		Unit
		Min.	Max.	
$t_{c(TA)}$	TAiIN input cycle time	400		ns
$t_{w(TAH)}$	TAiIN input HIGH pulse width	200		ns
$t_{w(TAL)}$	TAiIN input LOW pulse width	200		ns

Table 5.38 Timer A Input (External Trigger Input in One-shot Timer Mode)

Symbol	Parameter	Standard		Unit
		Min.	Max.	
$t_{c(TA)}$	TAiIN input cycle time	200		ns
$t_{w(TAH)}$	TAiIN input HIGH pulse width	100		ns
$t_{w(TAL)}$	TAiIN input LOW pulse width	100		ns

Table 5.39 Timer A Input (External Trigger Input in Pulse Width Modulation Mode)

Symbol	Parameter	Standard		Unit
		Min.	Max.	
$t_{w(TAH)}$	TAiIN input HIGH pulse width	100		ns
$t_{w(TAL)}$	TAiIN input LOW pulse width	100		ns

Table 5.40 Timer A Input (Counter Increment/decrement Input in Event Counter Mode)

Symbol	Parameter	Standard		Unit
		Min.	Max.	
$t_{c(UP)}$	TAiOUT input cycle time	2000		ns
$t_{w(UPH)}$	TAiOUT input HIGH pulse width	1000		ns
$t_{w(UPL)}$	TAiOUT input LOW pulse width	1000		ns
$t_{su(UP-TIN)}$	TAiOUT input setup time	400		ns
$t_{h(TIN-UP)}$	TAiOUT input hold time	400		ns

Table 5.41 Timer A Input (Two-phase Pulse Input in Event Counter Mode)

Symbol	Parameter	Standard		Unit
		Min.	Max.	
$t_{c(TA)}$	TAiIN input cycle rime	800		ns
$t_{su(TAIN-TAOUT)}$	TAiOUT input setup time	200		ns
$t_{su(TAOUT-TAIN)}$	TAiIN input setup time	200		ns

Timing Requirements **VCC = 5 V**

(Referenced to VCC = 5 V, VSS = 0 V, at Topr = –40 to 85°C unless otherwise specified)

Table 5.42 Timer B Input (Counter Input in Event Counter Mode)

Symbol	Parameter	Standard		Unit
		Min.	Max.	
$t_{c(TB)}$	TBiIN input cycle time (counted on one edge)	100		ns
$t_{w(TBH)}$	TBiIN input HIGH pulse width (counted on one edge)	40		ns
$t_{w(TBL)}$	TBiIN input LOW pulse width (counted on one edge)	40		ns
$t_{c(TB)}$	TBiIN input cycle time (counted on both edges)	200		ns
$t_{w(TBH)}$	TBiIN input HIGH pulse width (counted on both edges)	80		ns
$t_{w(TBL)}$	TBiIN input LOW pulse width (counted on both edges)	80		ns

Table 5.43 Timer B Input (Pulse Period Measurement Mode)

Symbol	Parameter	Standard		Unit
		Min.	Max.	
$t_{c(TB)}$	TBiIN input cycle time	400		ns
$t_{w(TBH)}$	TBiIN input HIGH pulse width	200		ns
$t_{w(TBL)}$	TBiIN input LOW pulse width	200		ns

Table 5.44 Timer B Input (Pulse Width Measurement Mode)

Symbol	Parameter	Standard		Unit
		Min.	Max.	
$t_{c(TB)}$	TBiIN input cycle time	400		ns
$t_{w(TBH)}$	TBiIN input HIGH pulse width	200		ns
$t_{w(TBL)}$	TBiIN input LOW pulse width	200		ns

Table 5.45 A/D Trigger Input

Symbol	Parameter	Standard		Unit
		Min.	Max.	
$t_{C(AD)}$	$\overline{ADTRG}$ input cycle time (trigger able minimum)	1000		ns
$t_{w(ADL)}$	$\overline{ADTRG}$ input LOW pulse width	125		ns

Table 5.46 Serial Interface

Symbol	Parameter	Standard		Unit
		Min.	Max.	
$t_{c(CK)}$	CLKi input cycle time	200		ns
$t_{w(CKH)}$	CLKi input HIGH pulse width	100		ns
$t_{w(CKL)}$	CLKi input LOW pulse width	100		ns
$t_{d(C-Q)}$	TXDi output delay time		80	ns
$t_{h(C-Q)}$	TXDi hold time	0		ns
$t_{su(D-C)}$	RXDi input setup time	70		ns
$t_{h(C-D)}$	RXDi input hold time	90		ns

Table 5.47 External Interrupt $\overline{INTi}$ Input

Symbol	Parameter	Standard		Unit
		Min.	Max.	
$t_{w(INH)}$	$\overline{INTi}$ input HIGH pulse width	250		ns
$t_{w(INL)}$	$\overline{INTi}$ input LOW pulse width	250		ns

Switching Characteristics **VCC = 5 V**

(Referenced to VCC = 5 V, VSS = 0 V, at Topr = –40 to 85 °C unless otherwise specified)

Table 5.48 Memory Expansion Mode and Microprocessor Mode (for setting with no wait)

Symbol	Parameter	Measuring Condition	Standard		Unit
			Min.	Max.	
$t_{d(BCLK-AD)}$	Address output delay time	Figure 5.12		25	ns
$t_{h(BCLK-AD)}$	Address output hold time (in relation to BCLK)		4		ns
$t_{h(RD-AD)}$	Address output hold time (in relation to RD)		0		ns
$t_{h(WR-AD)}$	Address output hold time (in relation to WR)		(NOTE 1)		ns
$t_{d(BCLK-CS)}$	Chip select output delay time			25	ns
$t_{h(BCLK-CS)}$	Chip select output hold time (in relation to BCLK)		4		ns
$t_{d(BCLK-ALE)}$	ALE signal output delay time			15	ns
$t_{h(BCLK-ALE)}$	ALE signal output hold time		–4		ns
$t_{d(BCLK-RD)}$	RD signal output delay time			25	ns
$t_{h(BCLK-RD)}$	RD signal output hold time		0		ns
$t_{d(BCLK-WR)}$	WR signal output delay time			25	ns
$t_{h(BCLK-WR)}$	WR signal output hold time		0		ns
$t_{d(BCLK-DB)}$	Data output delay time (in relation to BCLK)			40	ns
$t_{h(BCLK-DB)}$	Data output hold time (in relation to BCLK) (3)		4		ns
$t_{d(DB-WR)}$	Data output delay time (in relation to WR)		(NOTE 2)		ns
$t_{h(WR-DB)}$	Data output hold time (in relation to WR) (3)		(NOTE 1)		ns
$t_{d(BCLK-HLDA)}$	$\overline{HLDA}$ output delay time			40	ns

NOTES:

1. Calculated according to the BCLK frequency as follows:

$$\frac{0.5 \times 10^9}{f(BCLK)} - 10 \text{ [ns]}$$

2. Calculated according to the BCLK frequency as follows:

$$\frac{0.5 \times 10^9}{f(BCLK)} - 40 \text{ [ns]} \qquad f(BCLK) \text{ is 12.5 MHz or less.}$$

3. This standard value shows the timing when the output is off, and does not show hold time of data bus.
Hold time of data bus varies with capacitor volume and pull-up (pull-down) resistance value.
Hold time of data bus is expressed in
$t = -CR \times \ln(1 - V_{OL} / V_{CC})$
by a circuit of the right figure.
For example, when $V_{OL} = 0.2\ V_{CC}$, C = 30 pF, R = 1 kΩ, hold time of output "L" level is
$t = -30\text{ pF} \times 1\text{ k}\Omega \times \ln(1 - 0.2\ V_{CC} / V_{CC}) = 6.7$ ns.

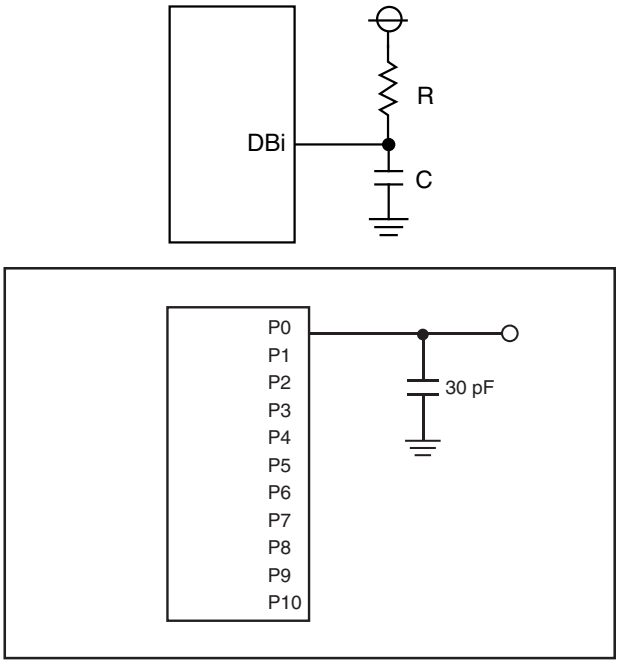

Figure 5.12 Port P0 to P10 Measurement Circuit

Switching Characteristics **VCC = 5 V**

(Referenced to VCC = 5 V, VSS = 0 V, at Topr = –40 to 85 °C unless otherwise specified)

Table 5.49 Memory Expansion Mode and Microprocessor Mode (for 1- to 3-wait setting and external area access)

Symbol	Parameter	Measuring Condition	Standard		Unit
			Min.	Max.	
$t_{d(BCLK-AD)}$	Address output delay time	Figure 5.12		25	ns
$t_{h(BCLK-AD)}$	Address output hold time (in relation to BCLK)		4		ns
$t_{h(RD-AD)}$	Address output hold time (in relation to RD)		0		ns
$t_{h(WR-AD)}$	Address output hold time (in relation to WR)		(NOTE 1)		ns
$t_{d(BCLK-CS)}$	Chip select output delay time			25	ns
$t_{h(BCLK-CS)}$	Chip select output hold time (in relation to BCLK)		4		ns
$t_{d(BCLK-ALE)}$	ALE signal output delay time			15	ns
$t_{h(BCLK-ALE)}$	ALE signal output hold time		–4		ns
$t_{d(BCLK-RD)}$	RD signal output delay time			25	ns
$t_{h(BCLK-RD)}$	RD signal output hold time		0		ns
$t_{d(BCLK-WR)}$	WR signal output delay time			25	ns
$t_{h(BCLK-WR)}$	WR signal output hold time		0		ns
$t_{d(BCLK-DB)}$	Data output delay time (in relation to BCLK)			40	ns
$t_{h(BCLK-DB)}$	Data output hold time (in relation to BCLK) (3)		4		ns
$t_{d(DB-WR)}$	Data output delay time (in relation to WR)		(NOTE 2)		ns
$t_{h(WR-DB)}$	Data output hold time (in relation to WR) (3)		(NOTE 1)		ns
$t_{d(BCLK-HLDA)}$	$\overline{HLDA}$ output delay time			40	ns

NOTES:

1. Calculated according to the BCLK frequency as follows:

$$\frac{0.5 \times 10^9}{f(BCLK)} - 10 \text{ [ns]}$$

2. Calculated according to the BCLK frequency as follows:

$$\frac{(n - 0.5) \times 10^9}{f(BCLK)} - 40 \text{ [ns]}$$

n is “1” for 1-wait setting, “2” for 2-wait setting and “3” for 3-wait setting. When n = 1, f(BCLK) is 12.5 MHz or less.

3. This standard value shows the timing when the output is off, and does not show hold time of data bus.
Hold time of data bus varies with capacitor volume and pull-up (pull-down) resistance value.
Hold time of data bus is expressed in
$t = -CR \times \ln(1 - V_{OL} / V_{CC})$
by a circuit of the right figure.
For example, when $V_{OL} = 0.2\ V_{CC}$, C = 30 pF, R =1 kΩ, hold time of output “L” level is
$t = -30\text{ pF} \times 1\text{ k}\Omega \times \ln(1 - 0.2\ V_{CC} / V_{CC}) = 6.7$ ns.

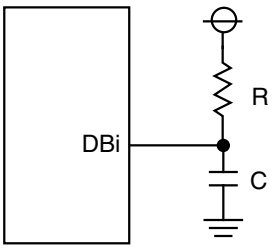

Switching Characteristics **VCC = 5 V**

(Referenced to VCC = 5 V, VSS = 0 V, at Topr = –40 to 85 °C unless otherwise specified)

Table 5.50 Memory Expansion Mode and Microprocessor Mode (for 2- to 3-wait setting, external area access and multiplexed bus selection)

Symbol	Parameter	Measuring Condition	Standard		Unit
			Min.	Max.	
$t_{d(BCLK-AD)}$	Address output delay time	Figure 5.12		25	ns
$t_{h(BCLK-AD)}$	Address output hold time (in relation to BCLK)		4		ns
$t_{h(RD-AD)}$	Address output hold time (in relation to RD)		(NOTE 1)		ns
$t_{h(WR-AD)}$	Address output hold time (in relation to WR)		(NOTE 1)		ns
$t_{d(BCLK-CS)}$	Chip select output delay time			25	ns
$t_{h(BCLK-CS)}$	Chip select output hold time (in relation to BCLK)		4		ns
$t_{h(RD-CS)}$	Chip select output hold time (in relation to RD)		(NOTE 1)		ns
$t_{h(WR-CS)}$	Chip select output hold time (in relation to WR)		(NOTE 1)		ns
$t_{d(BCLK-RD)}$	RD signal output delay time			25	ns
$t_{h(BCLK-RD)}$	RD signal output hold time		0		ns
$t_{d(BCLK-WR)}$	WR signal output delay time			25	ns
$t_{h(BCLK-WR)}$	WR signal output hold time		0		ns
$t_{d(BCLK-DB)}$	Data output delay time (in relation to BCLK)			40	ns
$t_{h(BCLK-DB)}$	Data output hold time (in relation to BCLK)		4		ns
$t_{d(DB-WR)}$	Data output delay time (in relation to WR)		(NOTE 2)		ns
$t_{h(WR-DB)}$	Data output hold time (in relation to WR)		(NOTE 1)		ns
$t_{d(BCLK-HLDA)}$	$\overline{HLDA}$ output delay time			40	ns
$t_{d(BCLK-ALE)}$	ALE signal output delay time (in relation to BCLK)			15	ns
$t_{h(BCLK-ALE)}$	ALE signal output hold time (in relation to BCLK)		–4		ns
$t_{d(AD-ALE)}$	ALE signal output delay time (in relation to Address)		(NOTE 3)		ns
$t_{h(ALE-AD)}$	ALE signal output hold time (in relation to Address)		(NOTE 4)		ns
$t_{d(AD-RD)}$	RD signal output delay from the end of Address		0		ns
$t_{d(AD-WR)}$	WR signal output delay from the end of Address		0		ns
$t_{dZ(RD-AD)}$	Address output floating start time			8	ns

NOTES:

1. Calculated according to the BCLK frequency as follows:

$$\frac{0.5 \times 10^9}{f(BCLK)} - 10 \text{ [ns]}$$

2. Calculated according to the BCLK frequency as follows:

$$\frac{(n - 0.5) \times 10^9}{f(BCLK)} - 40 \text{ [ns]}$$

n is “2” for 2-wait setting, “3” for 3-wait setting.

3. Calculated according to the BCLK frequency as follows:

$$\frac{0.5 \times 10^9}{f(BCLK)} - 25 \text{ [ns]}$$

4. Calculated according to the BCLK frequency as follows:

$$\frac{0.5 \times 10^9}{f(BCLK)} - 15 \text{ [ns]}$$

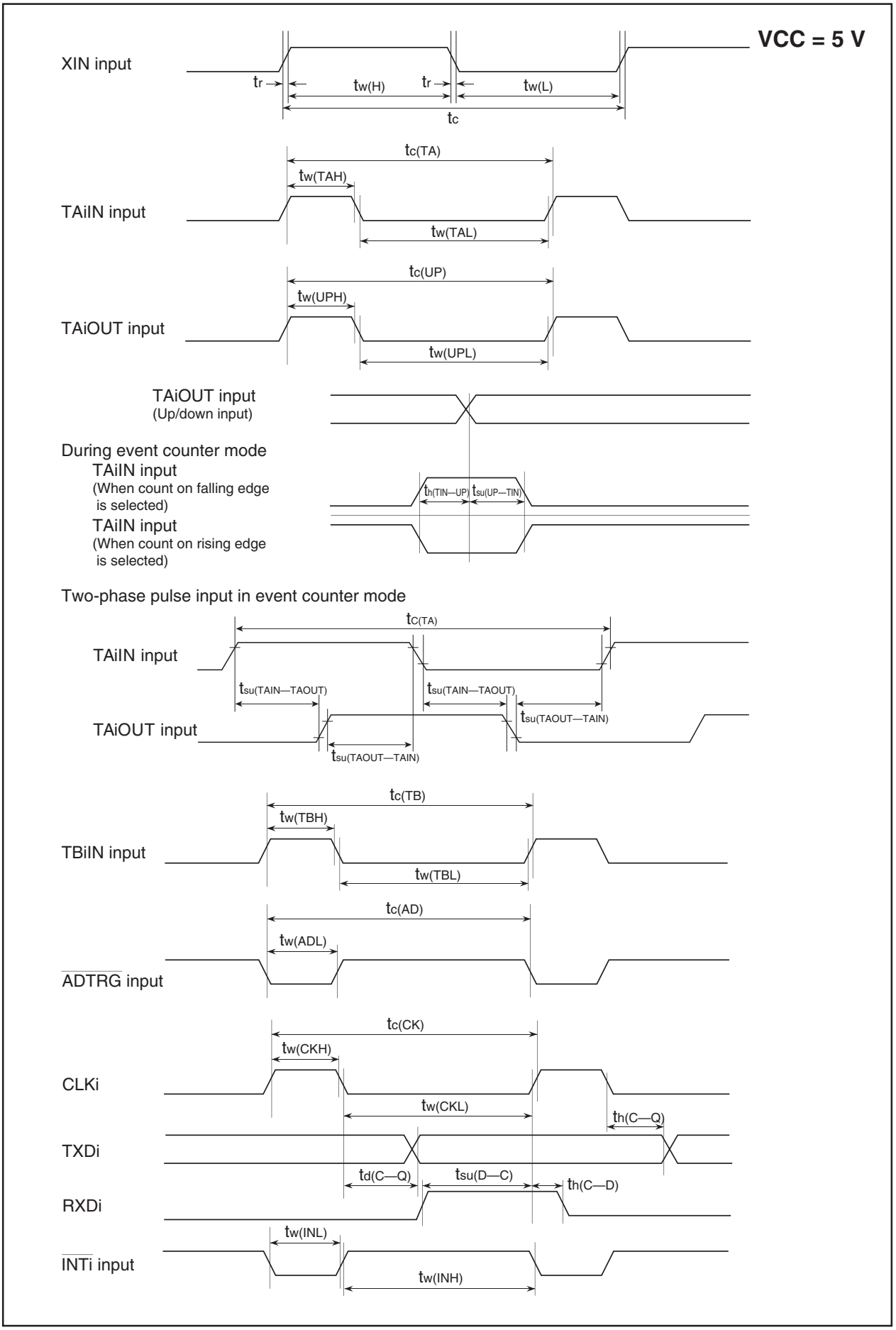

Figure 5.13 Timing Diagram (1)

Memory Expansion Mode and Microprocessor Mode **VCC = 5 V**

(Effective for setting with wait)

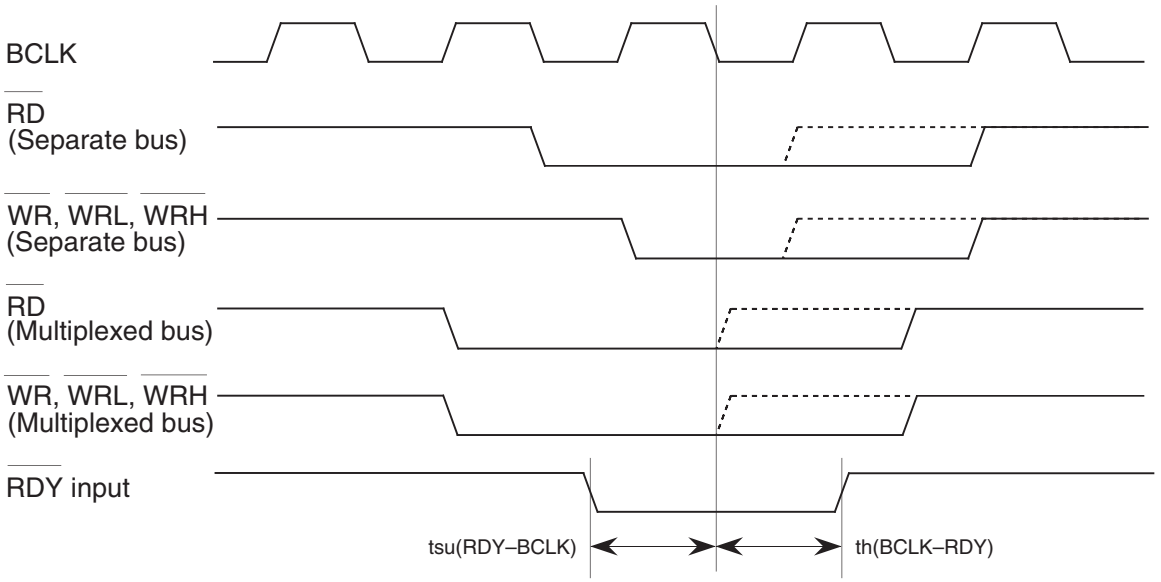

(Common to setting with wait and setting without wait)

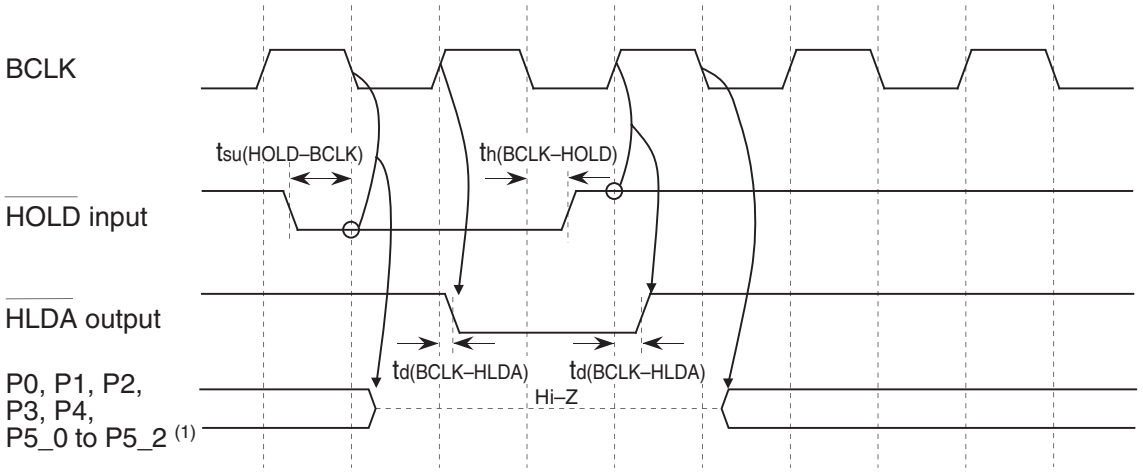

NOTE:
1. The above pins are set to high-impedance regardless of the input level of the BYTE pin, the PM06 bit in the PM0 register, and the PM11 bit in the PM1 register.

Measuring conditions :
- VCC = 5 V
- Input timing voltage : Determined with V_{IL} = 1.0 V, V_{IH} = 4.0 V
- Output timing voltage: Determined with V_{OL} = 2.5 V, V_{OH} = 2.5 V

Figure 5.14 Timing Diagram (2)

Memory Expansion Mode and Microprocessor Mode

VCC = 5 V

(For setting with no wait)

Read timing

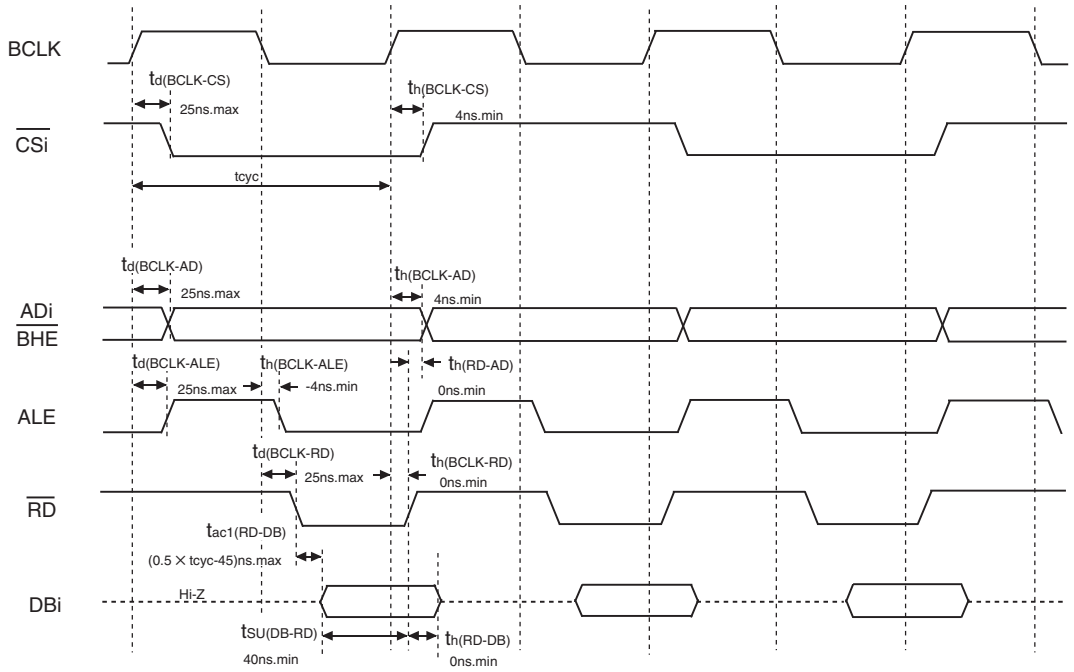

Write timing

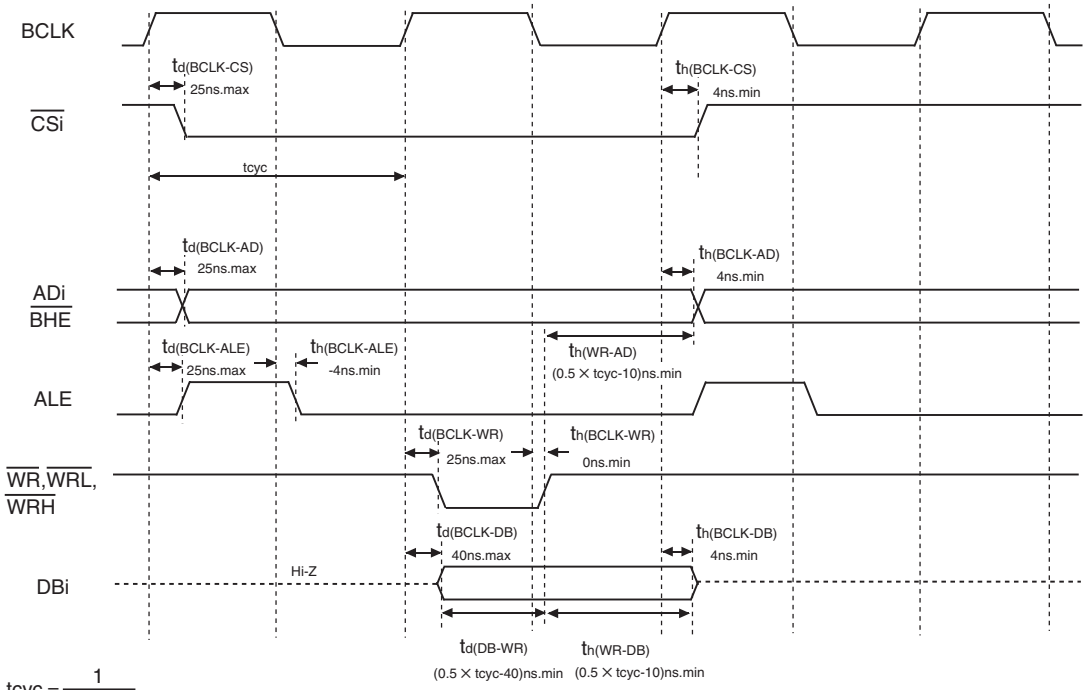

$$tcyc = \frac{1}{f(BCLK)}$$

Measuring conditions :

- VCC = 5 V
- Input timing voltage : V_{IL} = 0.8 V, V_{IH} = 2.0 V
- Output timing voltage : V_{OL} = 0.4 V, V_{OH} = 2.4 V

Figure 5.15 Timing Diagram (3)

Memory Expansion Mode and Microprocessor Mode

VCC = 5 V

(For 1-wait setting and external area access)

Read timing

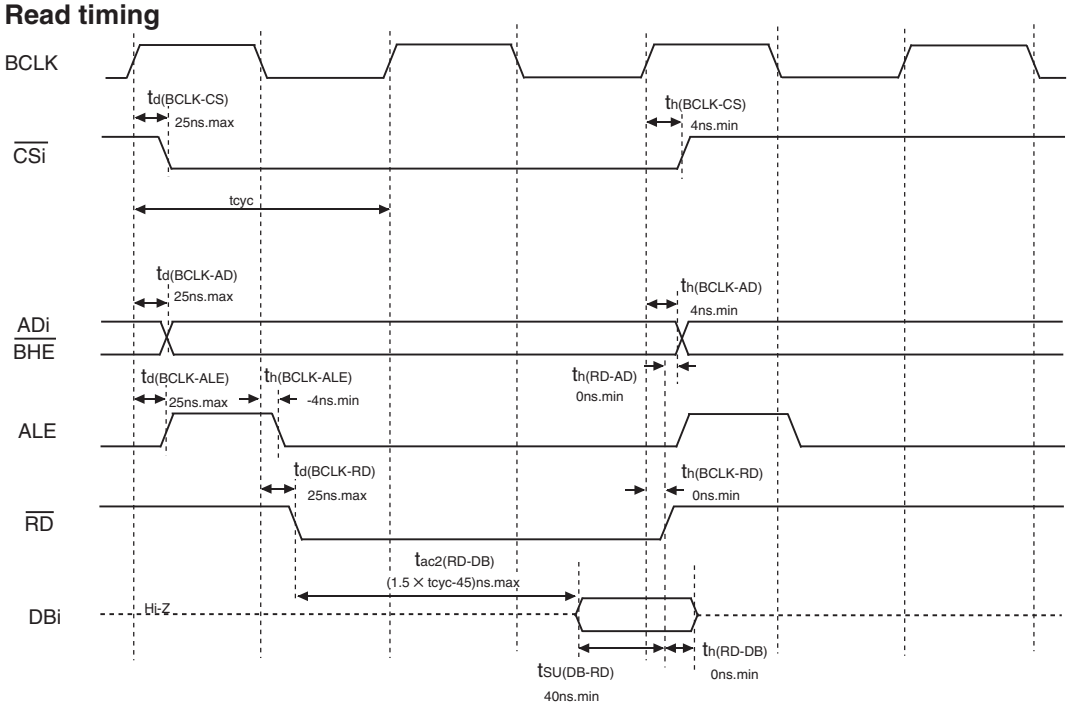

Write timing

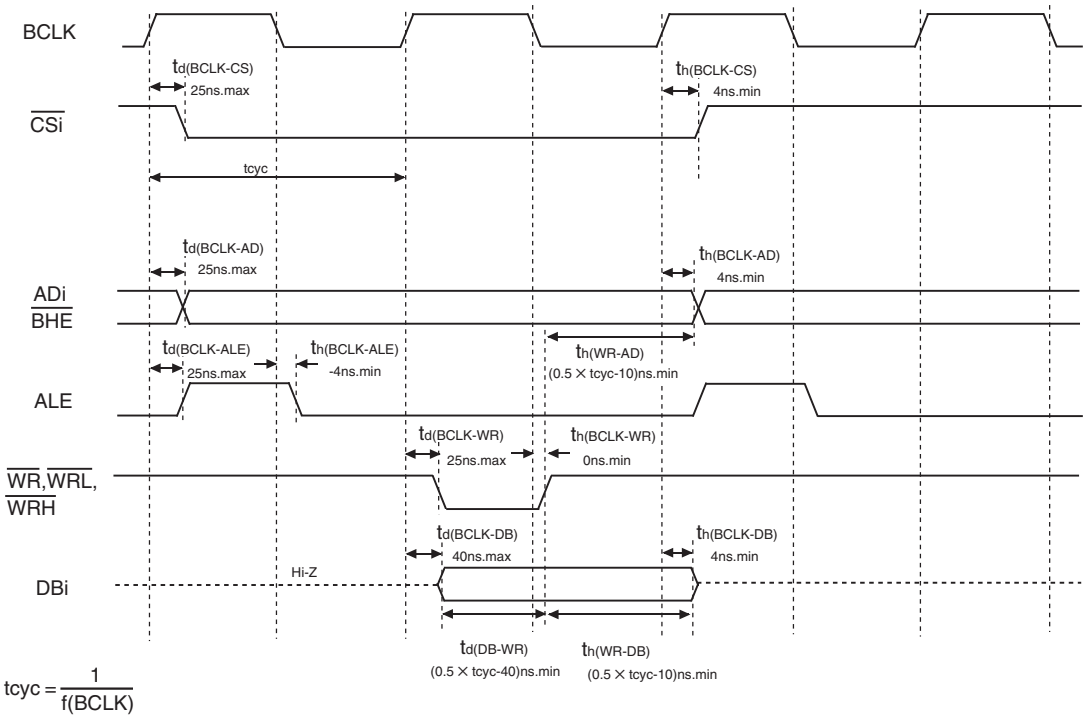

$$tcyc = \frac{1}{f(BCLK)}$$

Measuring conditions :
- VCC = 5 V
- Input timing voltage : V_{IL} = 0.8 V, V_{IH} = 2.0 V
- Output timing voltage : V_{OL} = 0.4 V, V_{OH} = 2.4 V

Figure 5.16 Timing Diagram (4)

Memory Expansion Mode and Microprocessor Mode

VCC = 5 V

(For 2-wait setting and external area access)

Read timing

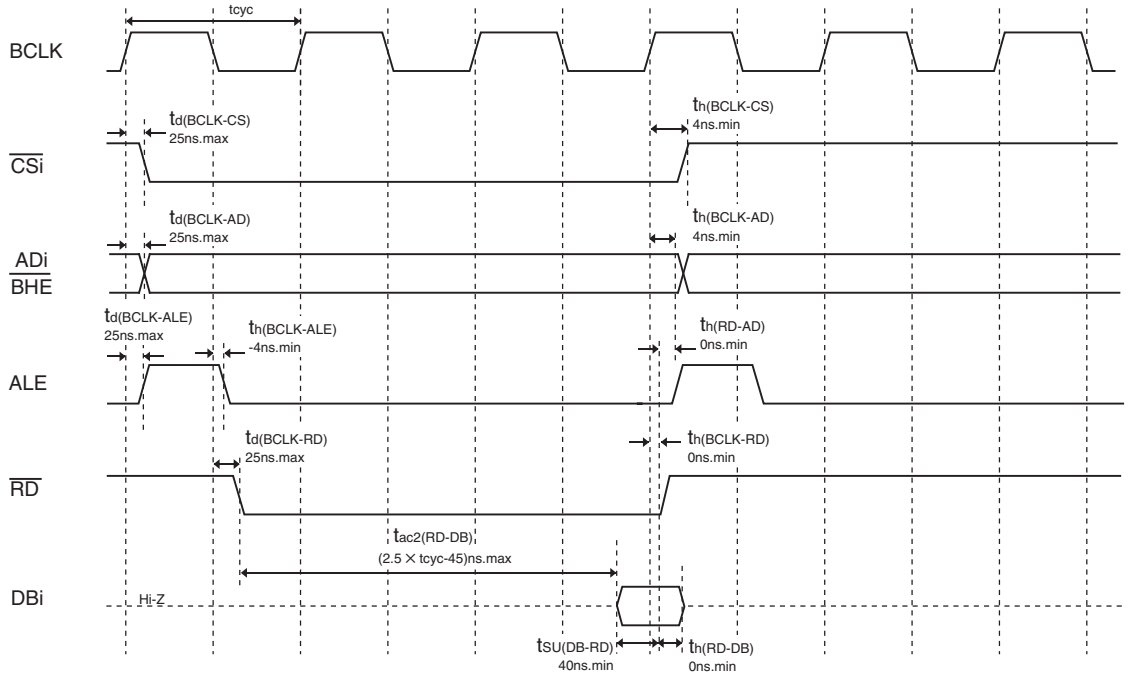

Write timing

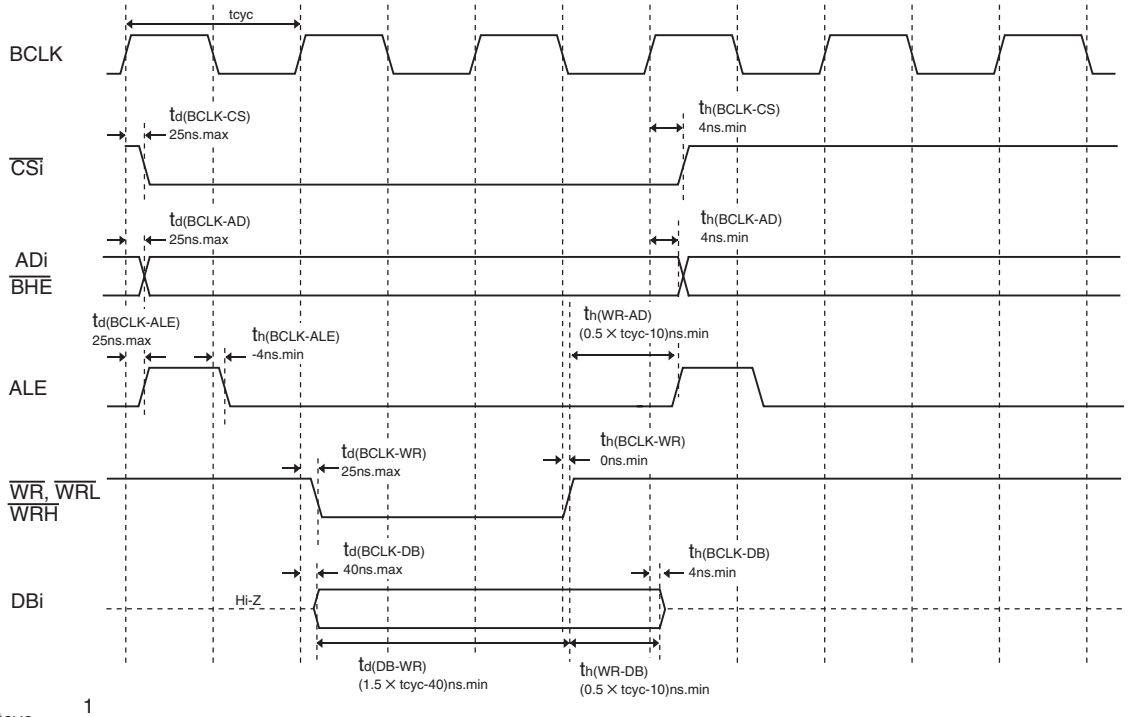

$$tcyc = \frac{1}{f(BCLK)}$$

Measuring conditions :

- VCC = 5 V
- Input timing voltage : V_{IL} = 0.8 V, V_{IH} = 2.0 V
- Output timing voltage : V_{OL} = 0.4 V, V_{OH} = 2.4 V

Figure 5.17 Timing Diagram (5)

Memory Expansion Mode and Microprocessor Mode

VCC = 5 V

(For 3-wait setting and external area access)

Read timing

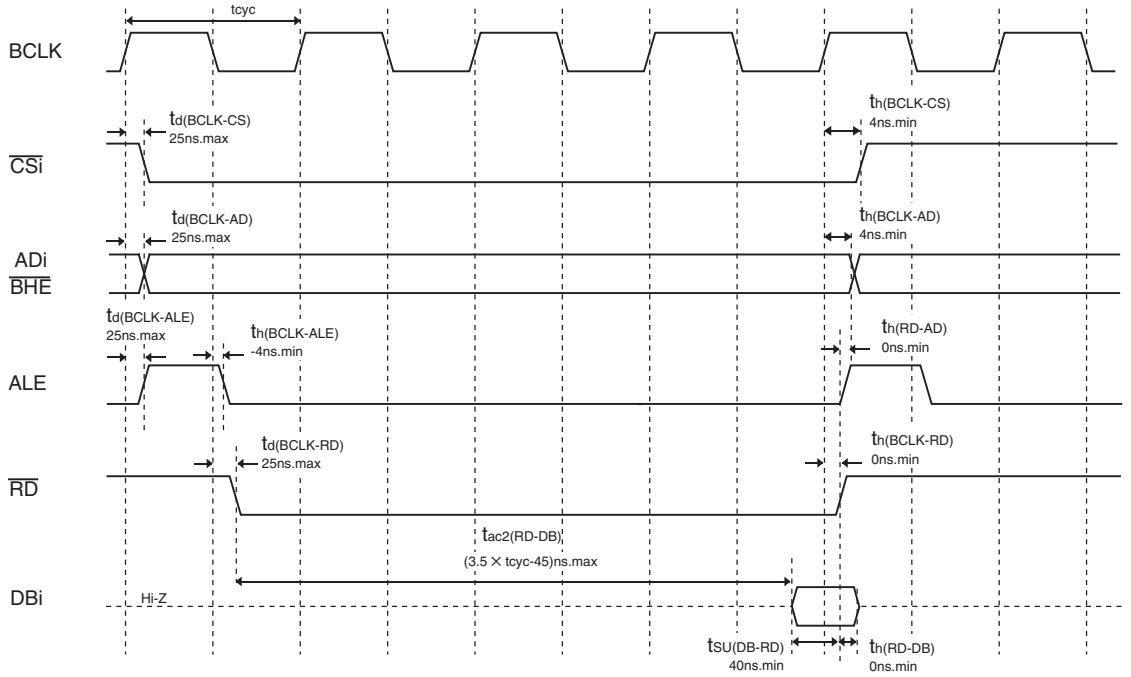

Write timing

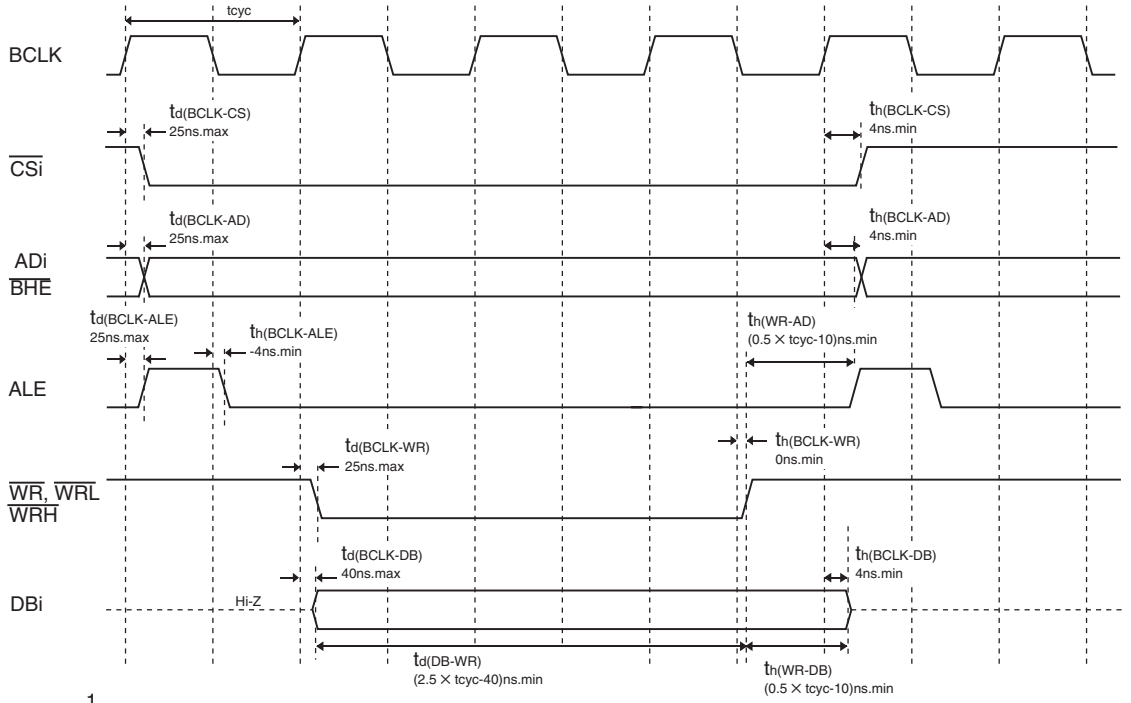

$$tcyc = \frac{1}{f(BCLK)}$$

Measuring conditions :

- VCC = 5 V
- Input timing voltage : V_{IL} = 0.8 V, V_{IH} = 2.0 V
- Output timing voltage : V_{OL} = 0.4 V, V_{OH} = 2.4 V

Figure 5.18 Timing Diagram (6)

Memory Expansion Mode and Microprocessor Mode — VCC = 5 V

(For 1- or 2-wait setting, external area access and multiplexed bus selection)

Read timing

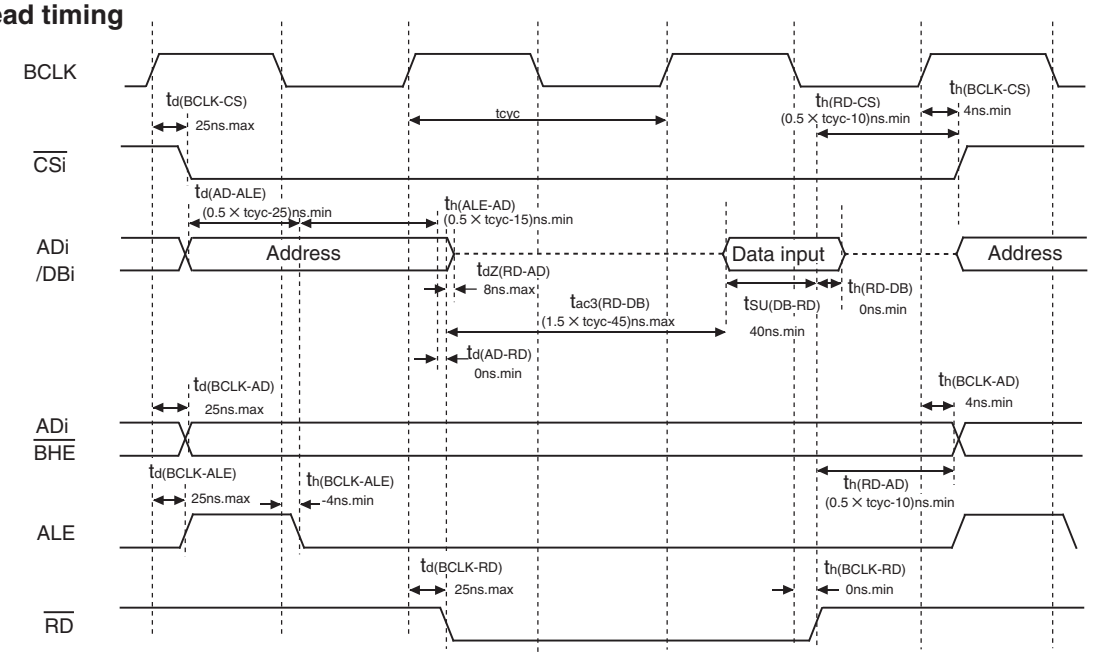

Write timing

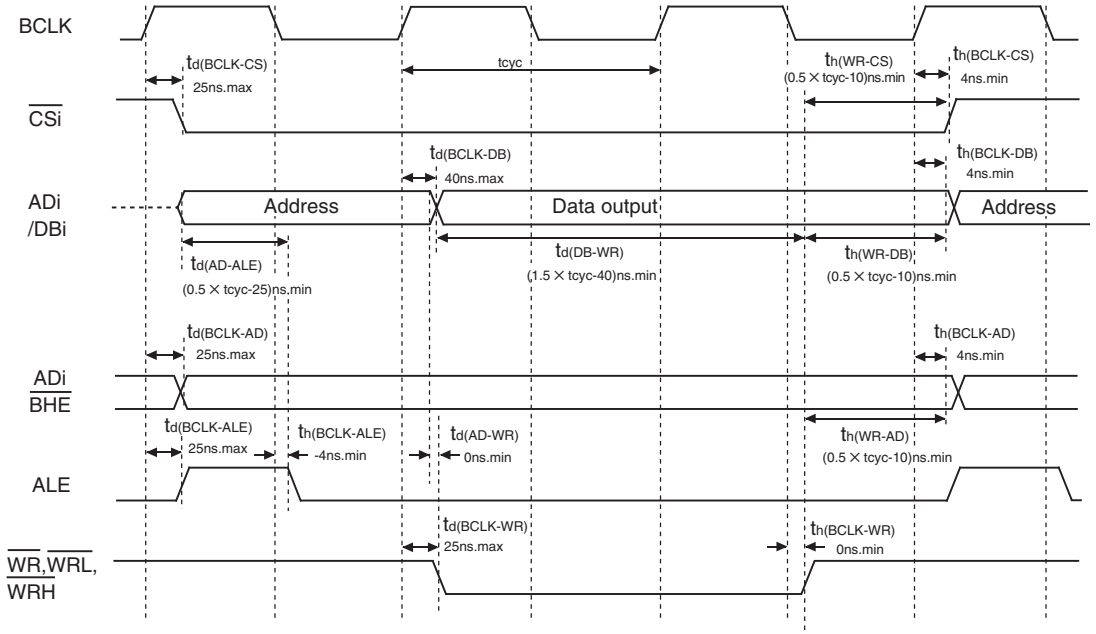

$$tcyc = \frac{1}{f(BCLK)}$$

Measuring conditions :
- VCC = 5 V
- Input timing voltage : V_{IL} = 0.8 V, V_{IH} = 2.0 V
- Output timing voltage : V_{OL} = 0.4 V, V_{OH} = 2.4 V

Figure 5.19 Timing Diagram (7)

Memory Expansion Mode and Microprocessor Mode

VCC = 5 V

(For 3-wait setting, external area access and multiplexed bus selection)

Read timing

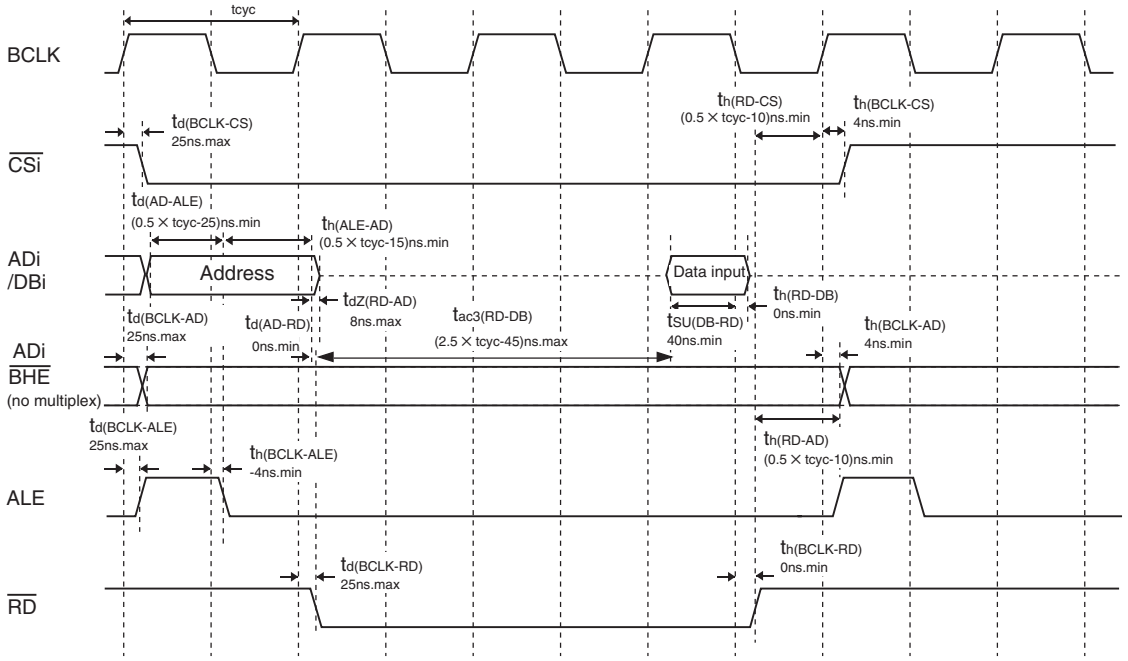

Write timing

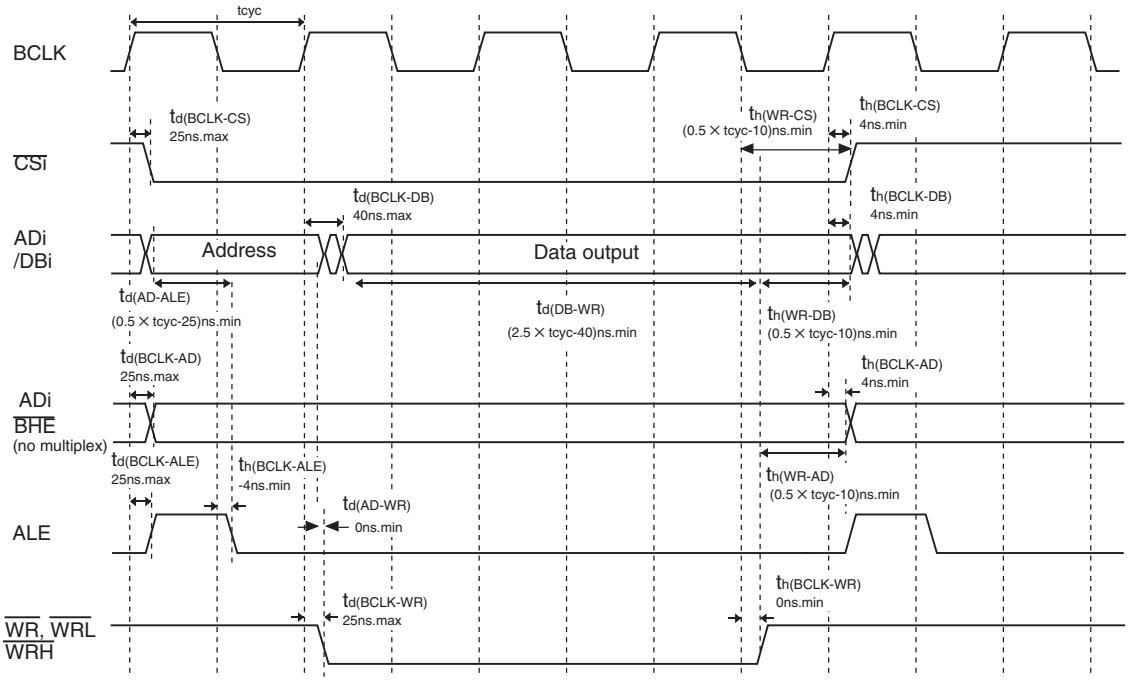

$$tcyc = \frac{1}{f(BCLK)}$$

Measuring conditions :
- VCC = 5 V
- Input timing voltage : V_{IL} = 0.8 V, V_{IH} = 2.0 V
- Output timing voltage : V_{OL} = 0.4 V, V_{OH} = 2.4 V

Figure 5.20 Timing Diagram (8)

Table 5.51 Electrical Characteristics [1] **VCC = 3.3 V**

Symbol	Parameter			Measuring Condition	Standard Min.	Standard Typ.	Standard Max.	Unit
V_{OH}	HIGH output voltage	P0_0 to P0_7, P1_0 to P1_7, P2_0 to P2_7, P3_0 to P3_7, P4_0 to P4_7, P5_0 to P5_7, P6_0 to P6_7, P7_0, P7_2 to P7_7, P8_0 to P8_4, P8_6, P8_7, P9_0, P9_2 to P9_7, P10_0 to P10_7		I_{OH} = –1 mA	V_{CC}-0.5		V_{CC}	V
V_{OH}	HIGH output voltage	XOUT	HIGHPOWER	I_{OH} = –0.1 mA	V_{CC}-0.5		V_{CC}	V
			LOWPOWER	I_{OH} = –50 μA	V_{CC}-0.5		V_{CC}	
	HIGH output voltage	XCOUT	HIGHPOWER	With no load applied		2.5		V
			LOWPOWER	With no load applied		1.6		
V_{OL}	LOW output voltage	P0_0 to P0_7, P1_0 to P1_7, P2_0 to P2_7, P3_0 to P3_7, P4_0 to P4_7, P5_0 to P5_7, P6_0 to P6_7, P7_0 to P7_7, P8_0 to P8_4, P8_6, P8_7, P9_0 to P9_7, P10_0 to P10_7		I_{OL} = 1 mA			0.5	V
V_{OL}	LOW output voltage	XOUT	HIGHPOWER	I_{OL} = 0.1 mA			0.5	V
			LOWPOWER	I_{OL} = 50 μA			0.5	
	LOW output voltage	XCOUT	HIGHPOWER	With no load applied		0		V
			LOWPOWER	With no load applied		0		
V_{T+}-V_{T-}	Hysteresis	$\overline{HOLD}$, $\overline{RDY}$, TA0IN to TA4IN, TB0IN to TB5IN, $\overline{INT0}$ to $\overline{INT5}$, $\overline{NMI}$, $\overline{ADTRG}$, $\overline{CTS0}$ to $\overline{CTS2}$, SCL0 to SCL2, SDA0 to SDA2, CLK0 to CLK3, TA0OUT to TA4OUT, $\overline{KI0}$ to $\overline{KI3}$, RXD0 to RXD2, SIN3			0.2		0.8	V
V_{T+}-V_{T-}	Hysteresis	$\overline{RESET}$			0.2		1.8	V
I_{IH}	HIGH input current	P0_0 to P0_7, P1_0 to P1_7, P2_0 to P2_7, P3_0 to P3_7, P4_0 to P4_7, P5_0 to P5_7, P6_0 to P6_7, P7_0 to P7_7, P8_0 to P8_7, P9_0 to P9_7, P10_0 to P10_7, XIN, $\overline{RESET}$, CNVSS, BYTE		V_I = 3.3 V			4.0	μA
I_{IL}	LOW input current	P0_0 to P0_7, P1_0 to P1_7, P2_0 to P2_7, P3_0 to P3_7, P4_0 to P4_7, P5_0 to P5_7, P6_0 to P6_7, P7_0 to P7_7, P8_0 to P8_7, P9_0 to P9_7, P10_0 to P10_7, XIN, $\overline{RESET}$, CNVSS, BYTE		V_I = 0 V			–4.0	μA
R_{PULLUP}	Pull-up resistance	P0_0 to P0_7, P1_0 to P1_7, P2_0 to P2_7, P3_0 to P3_7, P4_0 to P4_7, P5_0 to P5_7, P6_0 to P6_7, P7_0, P7_2 to P7_7, P8_0 to P8_4, P8_6, P8_7, P9_0, P9_2 to P9_7, P10_0 to P10_7		V_I = 0 V	50	100	500	kΩ
R_{fXIN}	Feedback resistance	XIN				3.0		MΩ
R_{fXCIN}	Feedback resistance	XCIN				25		MΩ
V_{RAM}	RAM retention voltage			At stop mode	2.0			V

NOTES:

1. Referenced to VCC = 3.0 to 3.6 V, VSS = 0 V at Topr = –40 to 85°C, f(BCLK) = 24 MHz unless otherwise specified.

Timing Requirements **VCC = 3.3 V**

(Referenced to VCC = 3.3 V, VSS = 0 V, at Topr = –40 to 85°C unless otherwise specified)

Table 5.52 External Clock Input (XIN Input)

Symbol	Parameter	Standard		Unit
		Min.	Max.	
t_c	External clock input cycle time	62.5		ns
$t_{w(H)}$	External clock input HIGH pulse width	25		ns
$t_{w(L)}$	External clock input LOW pulse width	25		ns
t_r	External clock rise time		15	ns
t_f	External clock fall time		15	ns

Table 5.53 Memory Expansion Mode and Microprocessor Mode

Symbol	Parameter	Standard		Unit
		Min.	Max.	
$t_{ac1(RD-DB)}$	Data input access time (for setting with no wait)		(NOTE 1)	ns
$t_{ac2(RD-DB)}$	Data input access time (for setting with wait)		(NOTE 2)	ns
$t_{ac3(RD-DB)}$	Data input access time (when accessing multiplexed bus area)		(NOTE 3)	ns
$t_{su(DB-RD)}$	Data input setup time	50		ns
$t_{su(RDY-BCLK)}$	$\overline{RDY}$ input setup time	40		ns
$t_{su(HOLD-BCLK)}$	$\overline{HOLD}$ input setup time	50		ns
$t_{h(RD-DB)}$	Data input hold time	0		ns
$t_{h(BCLK-RDY)}$	$\overline{RDY}$ input hold time	0		ns
$t_{h(BCLK-HOLD)}$	$\overline{HOLD}$ input hold time	0		ns

NOTES:

1. Calculated according to the BCLK frequency as follows:

$$\frac{0.5 \times 10^9}{f(BCLK)} - 60 \text{ [ns]}$$

2. Calculated according to the BCLK frequency as follows:

$$\frac{(n - 0.5) \times 10^9}{f(BCLK)} - 60 \text{ [ns]}$$

n is “2” for 1-wait setting, “3” for 2-wait setting and “4” for 3-wait setting.

3. Calculated according to the BCLK frequency as follows:

$$\frac{(n - 0.5) \times 10^9}{f(BCLK)} - 60 \text{ [ns]}$$

n is “2” for 2-wait setting, “3” for 3-wait setting.

Timing Requirements **VCC = 3.3 V**

(Referenced to VCC = 3.3 V, VSS = 0 V, at Topr = –40 to 85°C unless otherwise specified)

Table 5.54 Timer A Input (Counter Input in Event Counter Mode)

Symbol	Parameter	Standard		Unit
		Min.	Max.	
$t_{c(TA)}$	TAiIN input cycle time	150		ns
$t_{w(TAH)}$	TAiIN input HIGH pulse width	60		ns
$t_{w(TAL)}$	TAiIN input LOW pulse width	60		ns

Table 5.55 Timer A Input (Gating Input in Timer Mode)

Symbol	Parameter	Standard		Unit
		Min.	Max.	
$t_{c(TA)}$	TAiIN input cycle time	600		ns
$t_{w(TAH)}$	TAiIN input HIGH pulse width	300		ns
$t_{w(TAL)}$	TAiIN input LOW pulse width	300		ns

Table 5.56 Timer A Input (External Trigger Input in One-shot Timer Mode)

Symbol	Parameter	Standard		Unit
		Min.	Max.	
$t_{c(TA)}$	TAiIN input cycle time	300		ns
$t_{w(TAH)}$	TAiIN input HIGH pulse width	150		ns
$t_{w(TAL)}$	TAiIN input LOW pulse width	150		ns

Table 5.57 Timer A Input (External Trigger Input in Pulse Width Modulation Mode)

Symbol	Parameter	Standard		Unit
		Min.	Max.	
$t_{w(TAH)}$	TAiIN input HIGH pulse width	150		ns
$t_{w(TAL)}$	TAiIN input LOW pulse width	150		ns

Table 5.58 Timer A Input (Counter Increment/decrement Input in Event Counter Mode)

Symbol	Parameter	Standard		Unit
		Min.	Max.	
$t_{c(UP)}$	TAiOUT input cycle time	3000		ns
$t_{w(UPH)}$	TAiOUT input HIGH pulse width	1500		ns
$t_{w(UPL)}$	TAiOUT input LOW pulse width	1500		ns
$t_{su(UP-TIN)}$	TAiOUT input setup time	600		ns
$t_{h(TIN-UP)}$	TAiOUT input hold time	600		ns

Table 5.59 Timer A Input (Two-phase Pulse Input in Event Counter Mode)

Symbol	Parameter	Standard		Unit
		Min.	Max.	
$t_{c(TA)}$	TAiIN input cycle time	2		µs
$t_{su(TAIN-TAOUT)}$	TAiOUT input setup time	500		ns
$t_{su(TAOUT-TAIN)}$	TAiIN input setup time	500		ns

Timing Requirements **VCC = 3.3 V**

(Referenced to VCC = 3.3 V, VSS = 0 V, at Topr = –40 to 85°C unless otherwise specified)

Table 5.60 Timer B Input (Counter Input in Event Counter Mode)

Symbol	Parameter	Standard		Unit
		Min.	Max.	
$t_{c(TB)}$	TBiIN input cycle time (counted on one edge)	150		ns
$t_{w(TBH)}$	TBiIN input HIGH pulse width (counted on one edge)	60		ns
$t_{w(TBL)}$	TBiIN input LOW pulse width (counted on one edge)	60		ns
$t_{c(TB)}$	TBiIN input cycle time (counted on both edges)	300		ns
$t_{w(TBH)}$	TBiIN input HIGH pulse width (counted on both edges)	120		ns
$t_{w(TBL)}$	TBiIN input LOW pulse width (counted on both edges)	120		ns

Table 5.61 Timer B Input (Pulse Period Measurement Mode)

Symbol	Parameter	Standard		Unit
		Min.	Max.	
$t_{c(TB)}$	TBiIN input cycle time	600		ns
$t_{w(TBH)}$	TBiIN input HIGH pulse width	300		ns
$t_{w(TBL)}$	TBiIN input LOW pulse width	300		ns

Table 5.62 Timer B Input (Pulse Width Measurement Mode)

Symbol	Parameter	Standard		Unit
		Min.	Max.	
$t_{c(TB)}$	TBiIN input cycle time	600		ns
$t_{w(TBH)}$	TBiIN input HIGH pulse width	300		ns
$t_{w(TBL)}$	TBiIN input LOW pulse width	300		ns

Table 5.63 A/D Trigger Input

Symbol	Parameter	Standard		Unit
		Min.	Max.	
$t_{C(AD)}$	$\overline{ADTRG}$ input cycle time (trigger able minimum)	1500		ns
$t_{w(ADL)}$	$\overline{ADTRG}$ input LOW pulse width	200		ns

Table 5.64 Serial Interface

Symbol	Parameter	Standard		Unit
		Min.	Max.	
$t_{c(CK)}$	CLKi input cycle time	300		ns
$t_{w(CKH)}$	CLKi input HIGH pulse width	150		ns
$t_{w(CKL)}$	CLKi input LOW pulse width	150		ns
$t_{d(C-Q)}$	TXDi output delay time		160	ns
$t_{h(C-Q)}$	TXDi hold time	0		ns
$t_{su(D-C)}$	RXDi input setup time	100		ns
$t_{h(C-D)}$	RXDi input hold time	90		ns

Table 5.65 External Interrupt $\overline{INTi}$ Input

Symbol	Parameter	Standard		Unit
		Min.	Max.	
$t_{w(INH)}$	$\overline{INTi}$ input HIGH pulse width	380		ns
$t_{w(INL)}$	$\overline{INTi}$ input LOW pulse width	380		ns

Switching Characteristics **VCC = 3.3 V**

(Referenced to VCC = 3.3 V, VSS = 0 V, at Topr = –40 to 85 °C unless otherwise specified)

Table 5.66 Memory Expansion Mode and Microprocessor Mode (for setting with no wait)

Symbol	Parameter	Measuring Condition	Standard		Unit
			Min.	Max.	
$t_{d(BCLK-AD)}$	Address output delay time	Figure 5.21		30	ns
$t_{h(BCLK-AD)}$	Address output hold time (in relation to BCLK)		4		ns
$t_{h(RD-AD)}$	Address output hold time (in relation to RD)		0		ns
$t_{h(WR-AD)}$	Address output hold time (in relation to WR)		(NOTE 1)		ns
$t_{d(BCLK-CS)}$	Chip select output delay time			30	ns
$t_{h(BCLK-CS)}$	Chip select output hold time (in relation to BCLK)		4		ns
$t_{d(BCLK-ALE)}$	ALE signal output delay time			25	ns
$t_{h(BCLK-ALE)}$	ALE signal output hold time		–4		ns
$t_{d(BCLK-RD)}$	RD signal output delay time			30	ns
$t_{h(BCLK-RD)}$	RD signal output hold time		0		ns
$t_{d(BCLK-WR)}$	WR signal output delay time			30	ns
$t_{h(BCLK-WR)}$	WR signal output hold time		0		ns
$t_{d(BCLK-DB)}$	Data output delay time (in relation to BCLK)			40	ns
$t_{h(BCLK-DB)}$	Data output hold time (in relation to BCLK) (3)		4		ns
$t_{d(DB-WR)}$	Data output delay time (in relation to WR)		(NOTE 2)		ns
$t_{h(WR-DB)}$	Data output hold time (in relation to WR) (3)		(NOTE 1)		ns
$t_{d(BCLK-HLDA)}$	$\overline{HLDA}$ output delay time			40	ns

NOTES:

1. Calculated according to the BCLK frequency as follows:

$$\frac{0.5 \times 10^9}{f(BCLK)} - 10 \text{ [ns]}$$

2. Calculated according to the BCLK frequency as follows:

$$\frac{0.5 \times 10^9}{f(BCLK)} - 40 \text{ [ns]} \qquad f(BCLK) \text{ is 12.5 MHz or less.}$$

3. This standard value shows the timing when the output is off, and does not show hold time of data bus.
Hold time of data bus varies with capacitor volume and pull-up (pull-down) resistance value.
Hold time of data bus is expressed in
$t = -CR \times \ln(1 - V_{OL} / V_{CC})$
by a circuit of the right figure.
For example, when $V_{OL} = 0.2\ V_{CC}$, C = 30 pF, R = 1 kΩ, hold time of output "L" level is
$t = -30\text{ pF} \times 1\text{ k}\Omega \times \ln(1 - 0.2\ V_{CC} / V_{CC}) = 6.7$ ns.

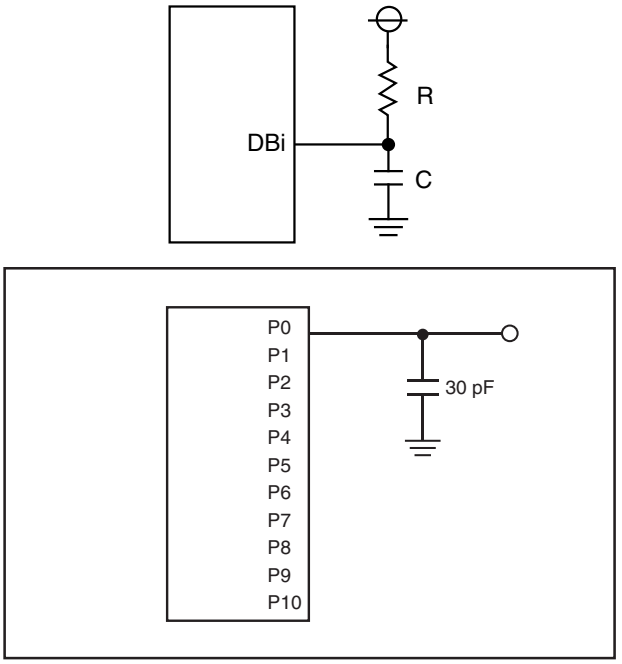

Figure 5.21 Port P0 to P10 Measurement Circuit

Switching Characteristics **VCC = 3.3 V**

(Referenced to VCC = 3.3 V, VSS = 0 V, at Topr = –40 to 85 °C unless otherwise specified)

Table 5.67 Memory Expansion Mode and Microprocessor Mode (for 1- to 3-wait setting and external area access)

Symbol	Parameter	Measuring Condition	Standard		Unit
			Min.	Max.	
$t_{d(BCLK-AD)}$	Address output delay time	Figure 5.21		30	ns
$t_{h(BCLK-AD)}$	Address output hold time (in relation to BCLK)		4		ns
$t_{h(RD-AD)}$	Address output hold time (in relation to RD)		0		ns
$t_{h(WR-AD)}$	Address output hold time (in relation to WR)		(NOTE 1)		ns
$t_{d(BCLK-CS)}$	Chip select output delay time			30	ns
$t_{h(BCLK-CS)}$	Chip select output hold time (in relation to BCLK)		4		ns
$t_{d(BCLK-ALE)}$	ALE signal output delay time			25	ns
$t_{h(BCLK-ALE)}$	ALE signal output hold time		–4		ns
$t_{d(BCLK-RD)}$	RD signal output delay time			30	ns
$t_{h(BCLK-RD)}$	RD signal output hold time		0		ns
$t_{d(BCLK-WR)}$	WR signal output delay time			30	ns
$t_{h(BCLK-WR)}$	WR signal output hold time		0		ns
$t_{d(BCLK-DB)}$	Data output delay time (in relation to BCLK)			40	ns
$t_{h(BCLK-DB)}$	Data output hold time (in relation to BCLK) (3)		4		ns
$t_{d(DB-WR)}$	Data output delay time (in relation to WR)		(NOTE 2)		ns
$t_{h(WR-DB)}$	Data output hold time (in relation to WR) (3)		(NOTE 1)		ns
$t_{d(BCLK-HLDA)}$	$\overline{HLDA}$ output delay time			40	ns

NOTES:

1. Calculated according to the BCLK frequency as follows:

$$\frac{0.5 \times 10^9}{f(BCLK)} - 10 \text{ [ns]}$$

2. Calculated according to the BCLK frequency as follows:

$$\frac{(n - 0.5) \times 10^9}{f(BCLK)} - 40 \text{ [ns]}$$

n is “1” for 1-wait setting, “2” for 2-wait setting and “3” for 3-wait setting. When n = 1, f(BCLK) is 12.5 MHz or less.

3. This standard value shows the timing when the output is off, and does not show hold time of data bus.
Hold time of data bus varies with capacitor volume and pull-up (pull-down) resistance value.
Hold time of data bus is expressed in
$t = -CR \times \ln(1 - V_{OL} / V_{CC})$
by a circuit of the right figure.
For example, when $V_{OL} = 0.2\ V_{CC}$, C = 30 pF, R =1 kΩ, hold time of output “L” level is
$t = -30\text{ pF} \times 1\text{ k}\Omega \times \ln(1 - 0.2\ V_{CC} / V_{CC}) = 6.7$ ns.

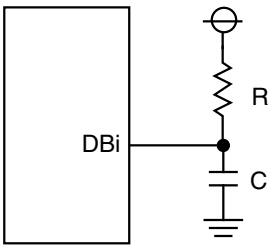

Switching Characteristics **VCC = 3.3 V**

(Referenced to VCC = 3.3 V, VSS = 0 V, at Topr = –40 to 85 °C unless otherwise specified)

Table 5.68 Memory Expansion Mode and Microprocessor Mode (for 2- to 3-wait setting, external area access and multiplexed bus selection)

Symbol	Parameter	Measuring Condition	Standard		Unit
			Min.	Max.	
$t_{d(BCLK-AD)}$	Address output delay time	Figure 5.21		50	ns
$t_{h(BCLK-AD)}$	Address output hold time (in relation to BCLK)		4		ns
$t_{h(RD-AD)}$	Address output hold time (in relation to RD)		(NOTE 1)		ns
$t_{h(WR-AD)}$	Address output hold time (in relation to WR)		(NOTE 1)		ns
$t_{d(BCLK-CS)}$	Chip select output delay time			50	ns
$t_{h(BCLK-CS)}$	Chip select output hold time (in relation to BCLK)		4		ns
$t_{h(RD-CS)}$	Chip select output hold time (in relation to RD)		(NOTE 1)		ns
$t_{h(WR-CS)}$	Chip select output hold time (in relation to WR)		(NOTE 1)		ns
$t_{d(BCLK-RD)}$	RD signal output delay time			40	ns
$t_{h(BCLK-RD)}$	RD signal output hold time		0		ns
$t_{d(BCLK-WR)}$	WR signal output delay time			40	ns
$t_{h(BCLK-WR)}$	WR signal output hold time		0		ns
$t_{d(BCLK-DB)}$	Data output delay time (in relation to BCLK)			50	ns
$t_{h(BCLK-DB)}$	Data output hold time (in relation to BCLK)		4		ns
$t_{d(DB-WR)}$	Data output delay time (in relation to WR)		(NOTE 2)		ns
$t_{h(WR-DB)}$	Data output hold time (in relation to WR)		(NOTE 1)		ns
$t_{d(BCLK-HLDA)}$	$\overline{HLDA}$ output delay time			40	ns
$t_{d(BCLK-ALE)}$	ALE signal output delay time (in relation to BCLK)			25	ns
$t_{h(BCLK-ALE)}$	ALE signal output hold time (in relation to BCLK)		–4		ns
$t_{d(AD-ALE)}$	ALE signal output delay time (in relation to Address)		(NOTE 3)		ns
$t_{h(ALE-AD)}$	ALE signal output hold time (in relation to Address)		(NOTE 4)		ns
$t_{d(AD-RD)}$	RD signal output delay from the end of Address		0		ns
$t_{d(AD-WR)}$	WR signal output delay from the end of Address		0		ns
$t_{dZ(RD-AD)}$	Address output floating start time			8	ns

NOTES:

1. Calculated according to the BCLK frequency as follows:

$$\frac{0.5 \times 10^9}{f(BCLK)} - 10 \text{ [ns]}$$

2. Calculated according to the BCLK frequency as follows:

$$\frac{(n - 0.5) \times 10^9}{f(BCLK)} - 50 \text{ [ns]}$$ n is “2” for 2-wait setting, “3” for 3-wait setting.

3. Calculated according to the BCLK frequency as follows:

$$\frac{0.5 \times 10^9}{f(BCLK)} - 40 \text{ [ns]}$$

4. Calculated according to the BCLK frequency as follows:

$$\frac{0.5 \times 10^9}{f(BCLK)} - 15 \text{ [ns]}$$

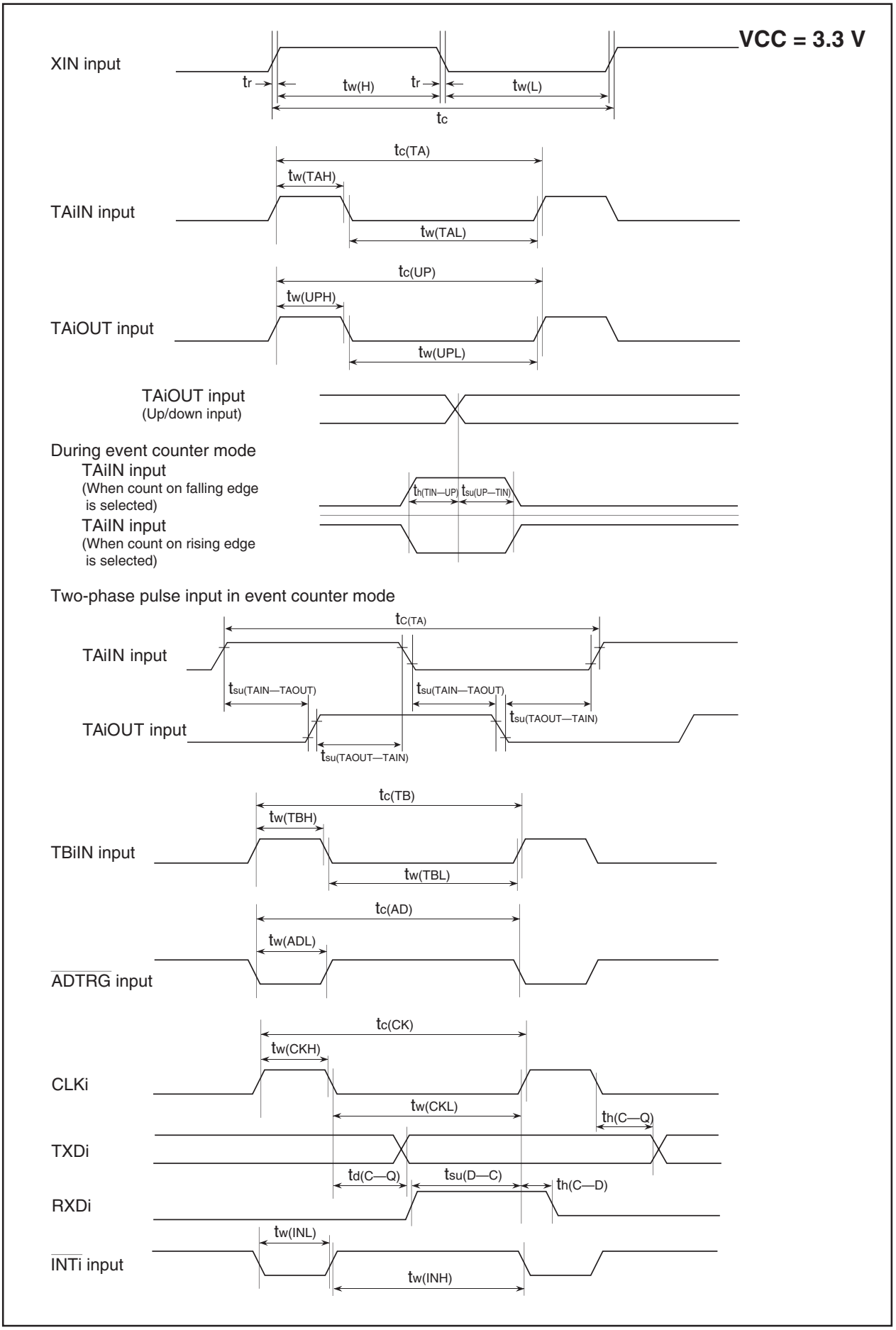

Figure 5.22 Timing Diagram (1)

Memory Expansion Mode and Microprocessor Mode **VCC = 3.3 V**

(Effective for setting with wait)

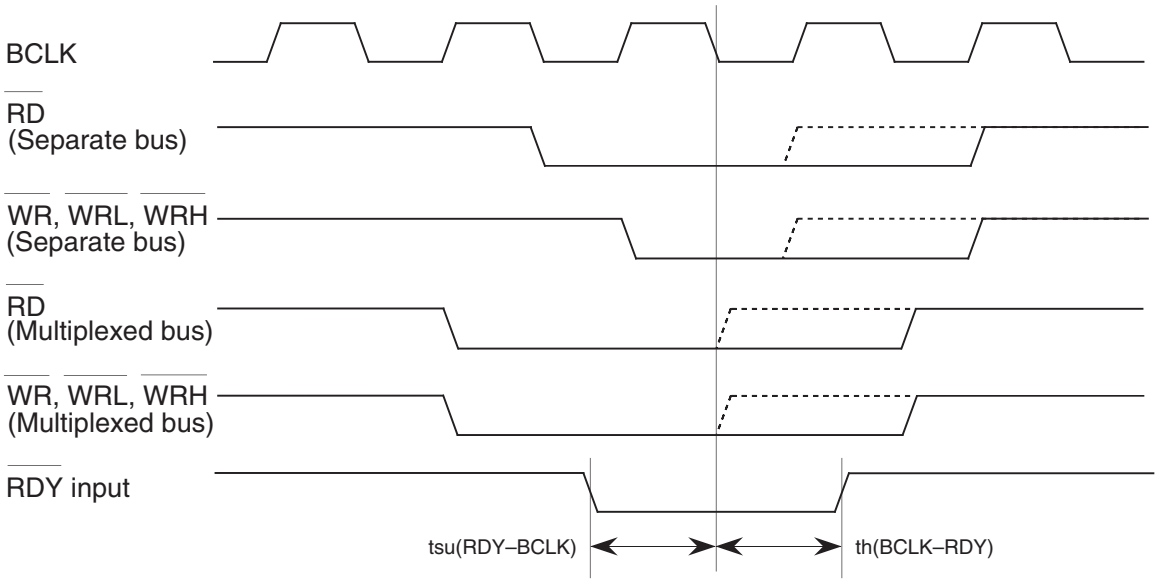

(Common to setting with wait and setting without wait)

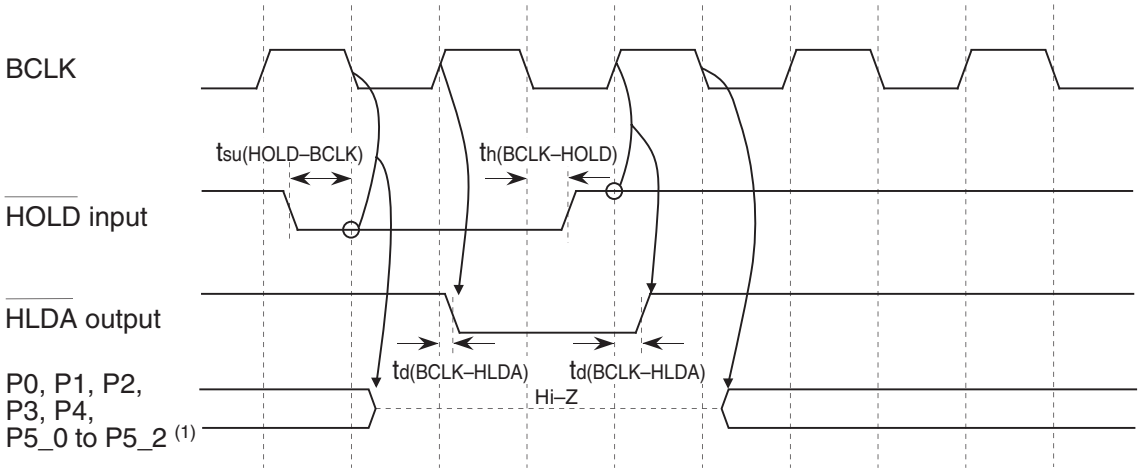

NOTE:
1. The above pins are set to high-impedance regardless of the input level of the BYTE pin, the PM06 bit in the PM0 register, and the PM11 bit in the PM1 register.

Measuring conditions :
- VCC = 3.3 V
- Input timing voltage : Determined with V_{IL} = 0.6 V, V_{IH} = 2.7 V
- Output timing voltage: Determined with V_{OL} = 1.65 V, V_{OH} = 1.65 V

Figure 5.23 Timing Diagram (2)

Memory Expansion Mode and Microprocessor Mode — VCC = 3.3 V

(For setting with no wait)

Read timing

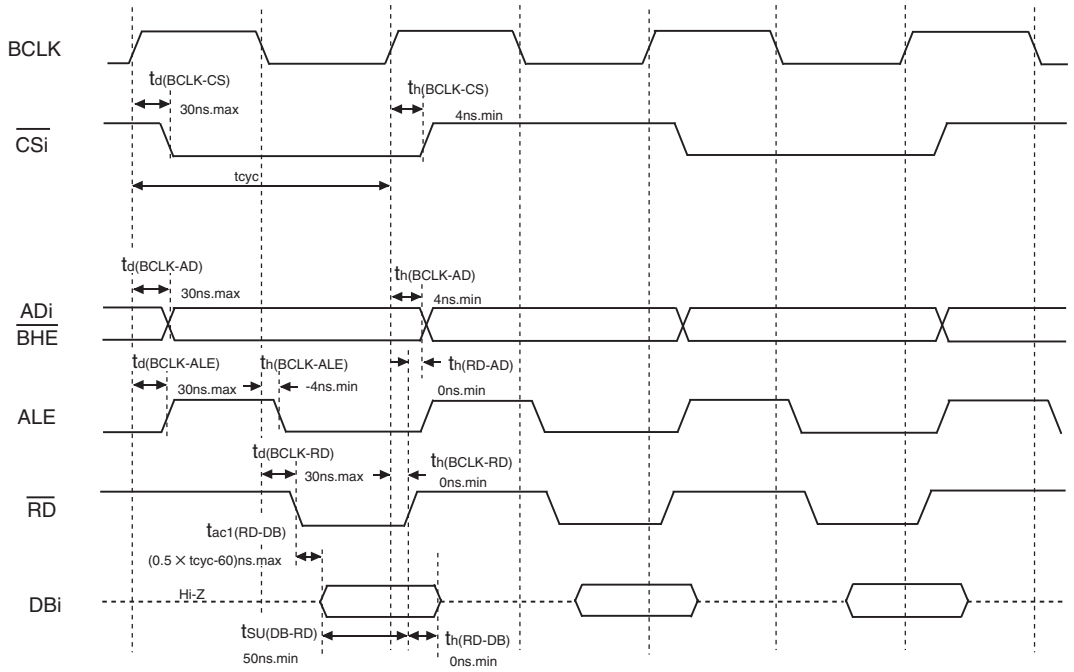

Write timing

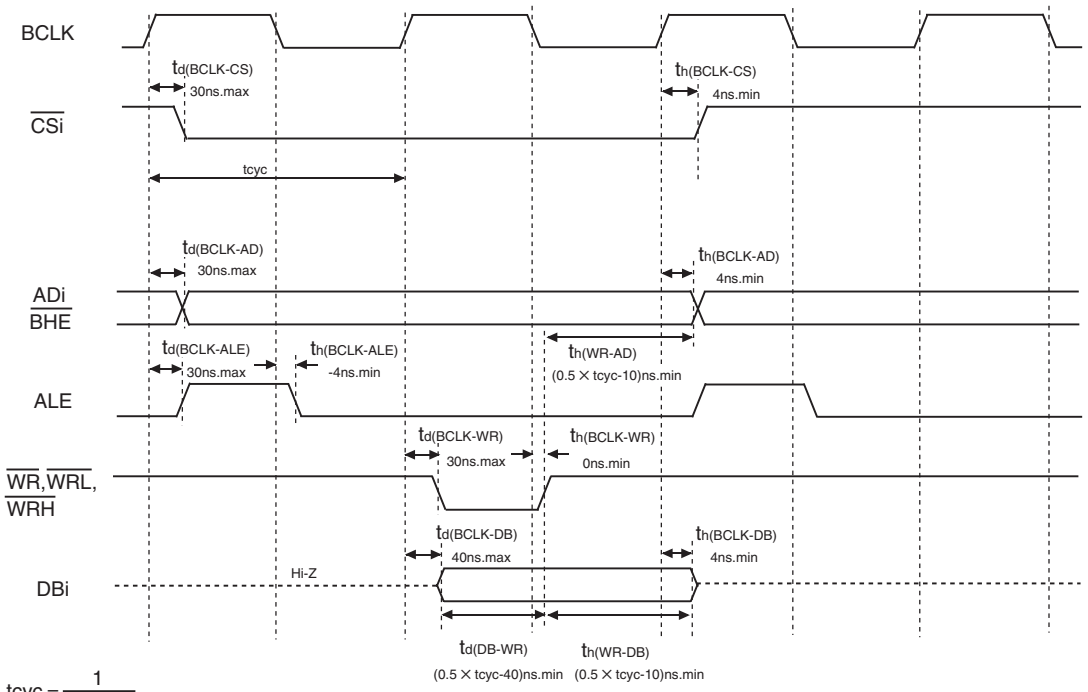

$$tcyc = \frac{1}{f(BCLK)}$$

Measuring conditions :
- VCC = 3.3 V
- Input timing voltage : V_{IL} = 0.6 V, V_{IH} = 2.7 V
- Output timing voltage : V_{OL} = 1.65 V, V_{OH} = 1.65 V

Figure 5.24 Timing Diagram (3)

Memory Expansion Mode and Microprocessor Mode — VCC = 3.3 V

(For 1-wait setting and external area access)

Read timing

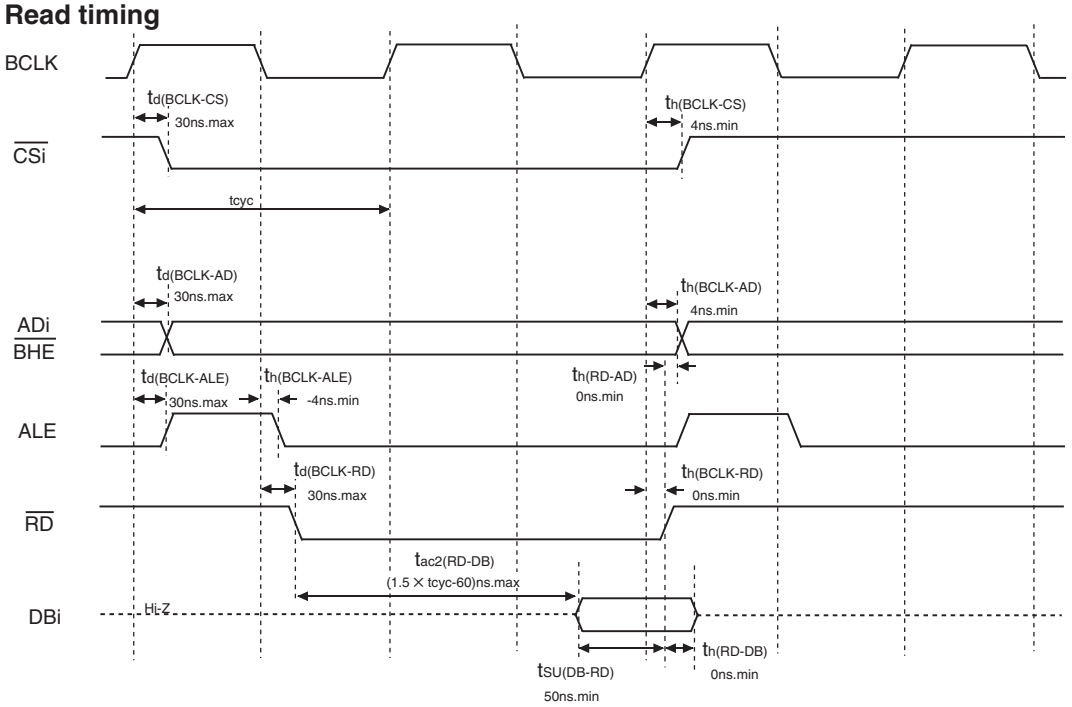

Write timing

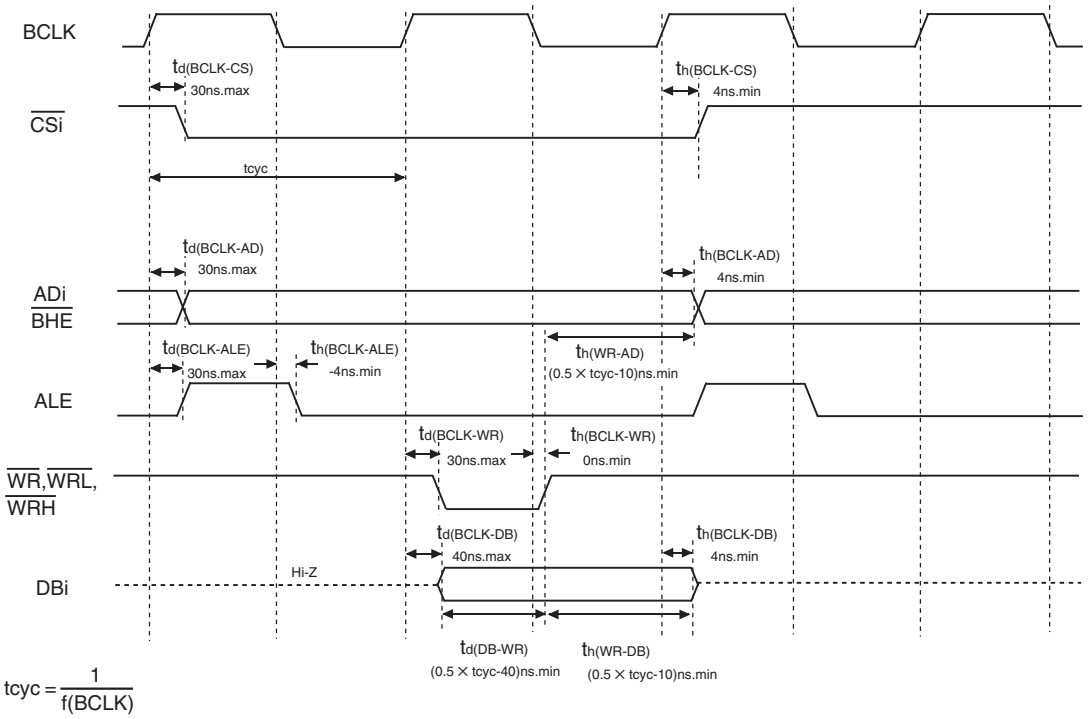

$$tcyc = \frac{1}{f(BCLK)}$$

Measuring conditions :
- VCC = 3.3 V
- Input timing voltage : V_{IL} = 0.6 V, V_{IH} = 2.7 V
- Output timing voltage : V_{OL} = 1.65 V, V_{OH} = 1.65 V

Figure 5.25 Timing Diagram (4)

Memory Expansion Mode and Microprocessor Mode — VCC = 3.3 V

(For 2-wait setting and external area access)

Read timing

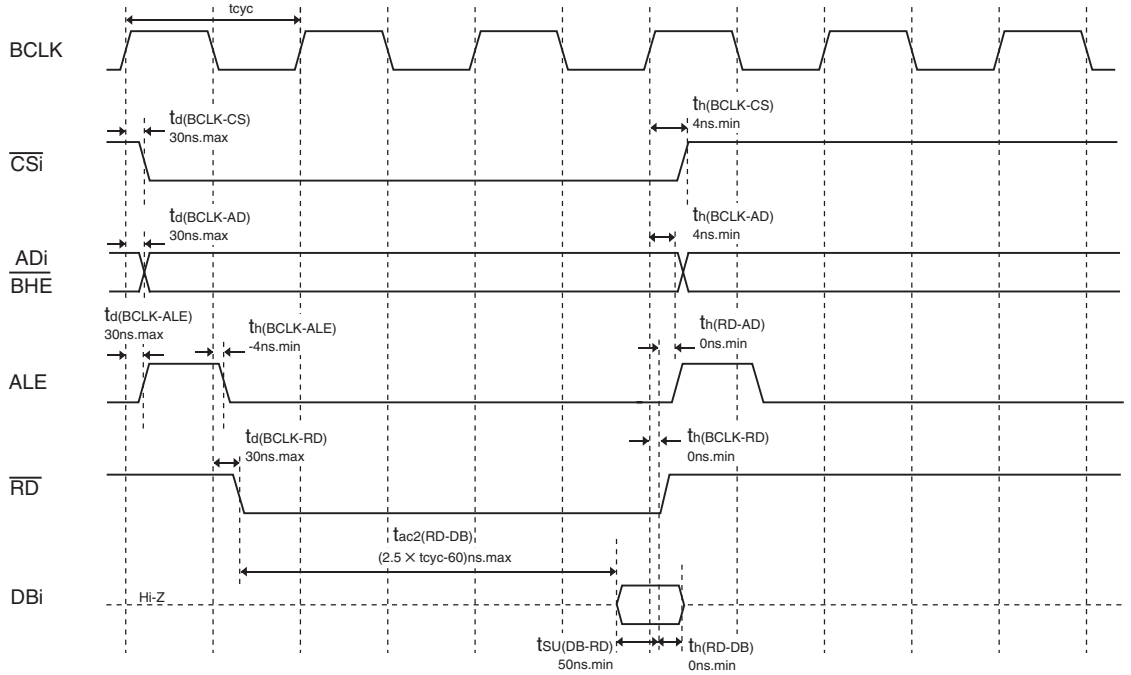

Write timing

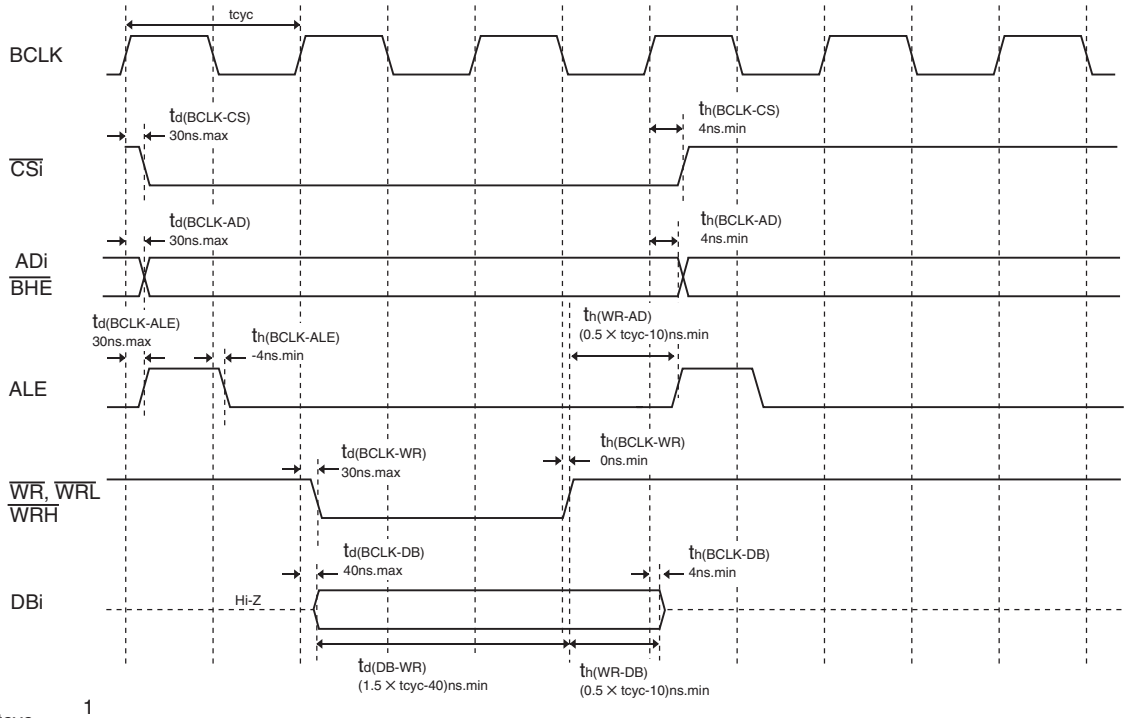

$$tcyc = \frac{1}{f(BCLK)}$$

Measuring conditions :

- VCC = 3.3 V
- Input timing voltage : V_{IL} = 0.6 V, V_{IH} = 2.7 V
- Output timing voltage : V_{OL} = 1.65 V, V_{OH} = 1.65 V

Figure 5.26 Timing Diagram (5)

Memory Expansion Mode and Microprocessor Mode — VCC = 3.3 V

(For 3-wait setting and external area access)

Read timing

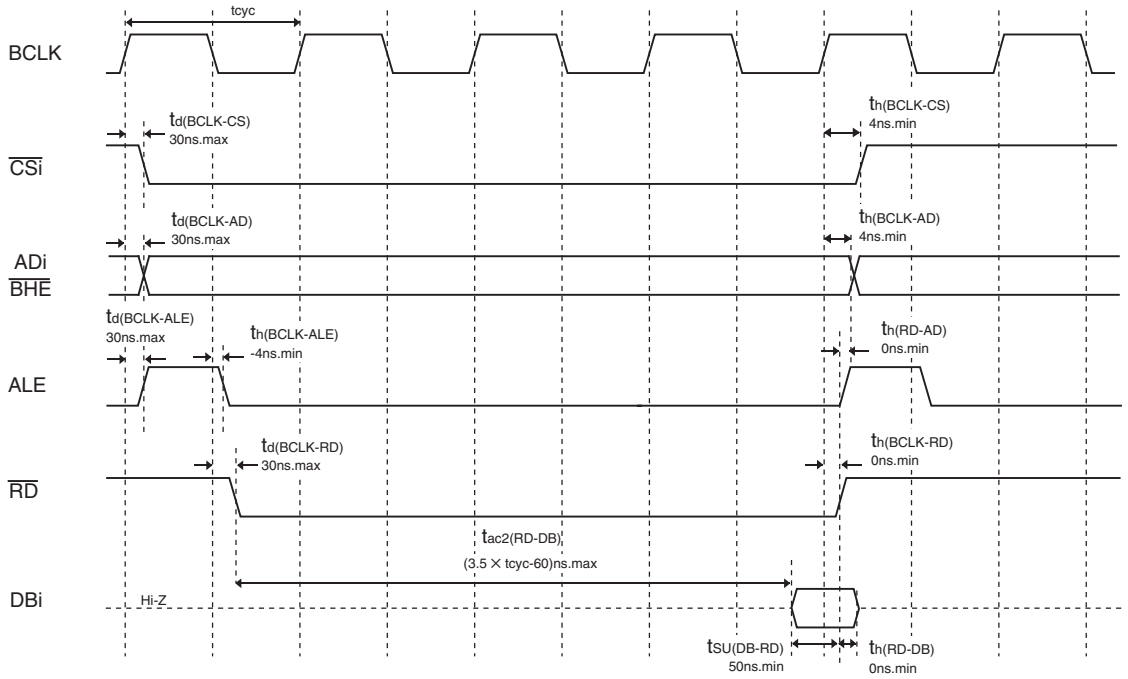

Write timing

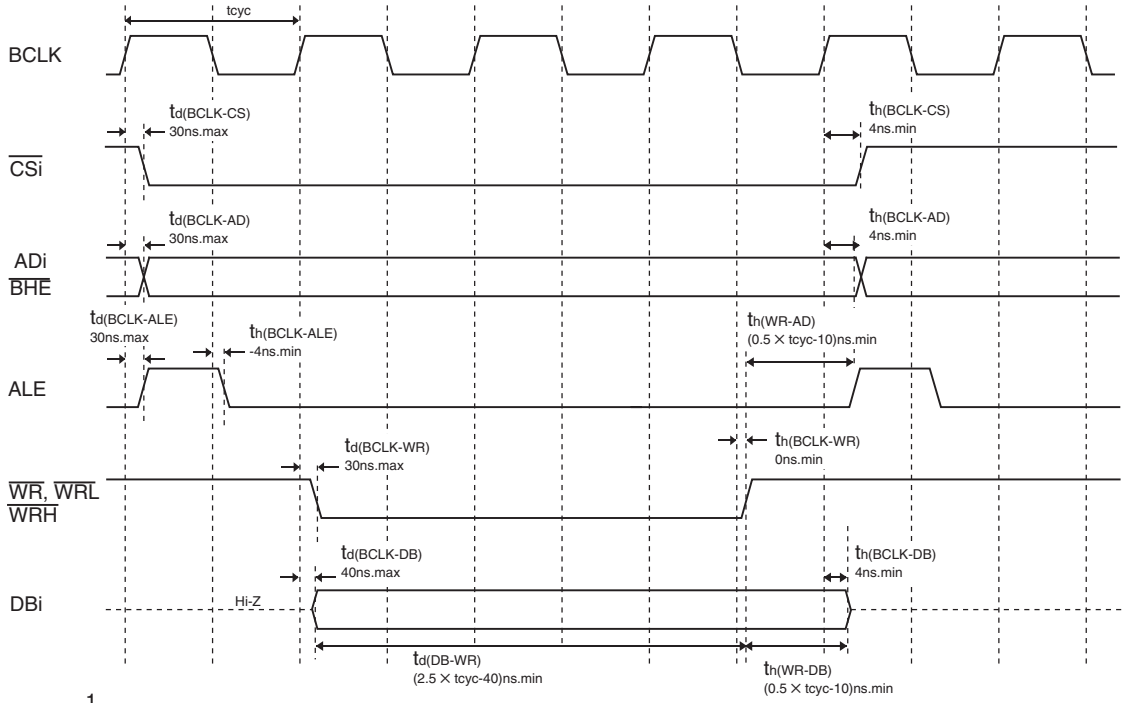

$$tcyc = \frac{1}{f(BCLK)}$$

Measuring conditions :

- VCC = 3.3 V
- Input timing voltage : V_{IL} = 0.6 V, V_{IH} = 2.7 V
- Output timing voltage : V_{OL} = 1.65 V, V_{OH} = 1.65 V

Figure 5.27 Timing Diagram (6)

Memory Expansion Mode and Microprocessor Mode — VCC = 3.3 V

(For 2-wait setting, external area access and multiplexed bus selection)

Read timing

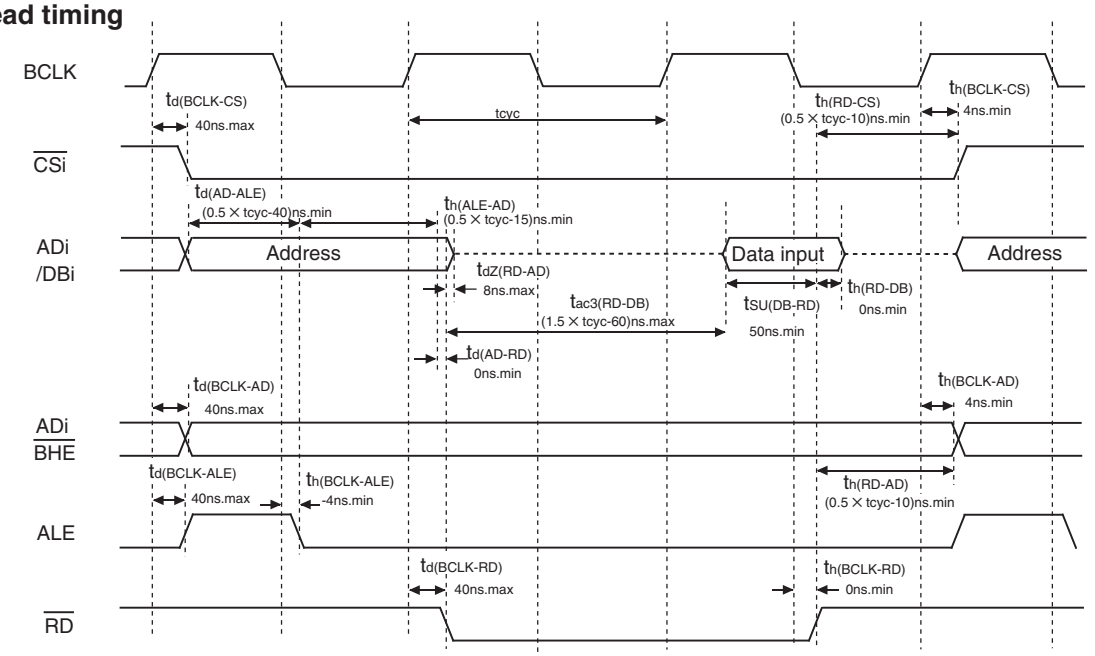

Write timing

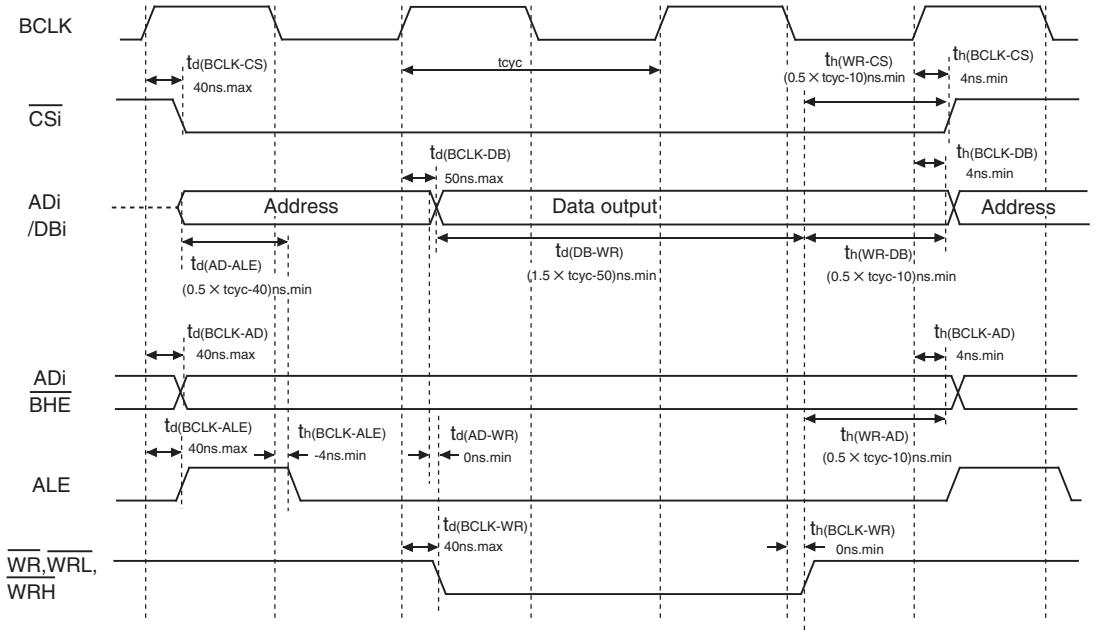

$$tcyc = \frac{1}{f(BCLK)}$$

Measuring conditions :
- VCC = 3.3 V
- Input timing voltage : V_{IL} = 0.6 V, V_{IH} = 2.7 V
- Output timing voltage : V_{OL} = 1.65 V, V_{OH} = 1.65 V

Figure 5.28 Timing Diagram (7)

Memory Expansion Mode and Microprocessor Mode — VCC = 3.3 V

(For 3-wait setting, external area access and multiplexed bus selection)

Read timing

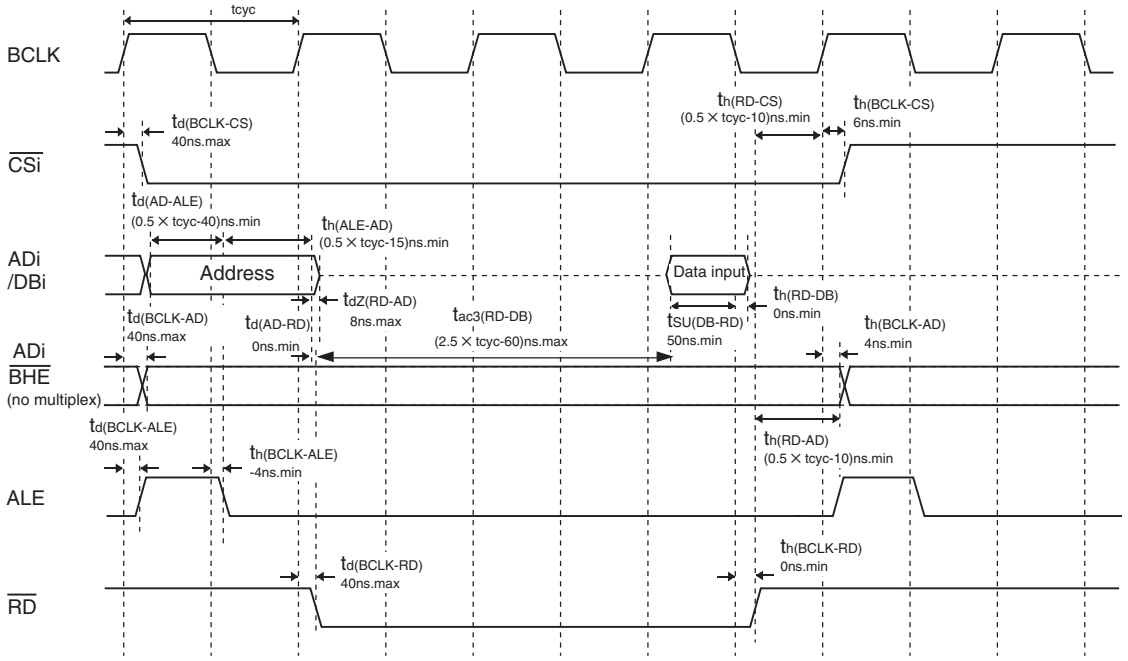

Write timing

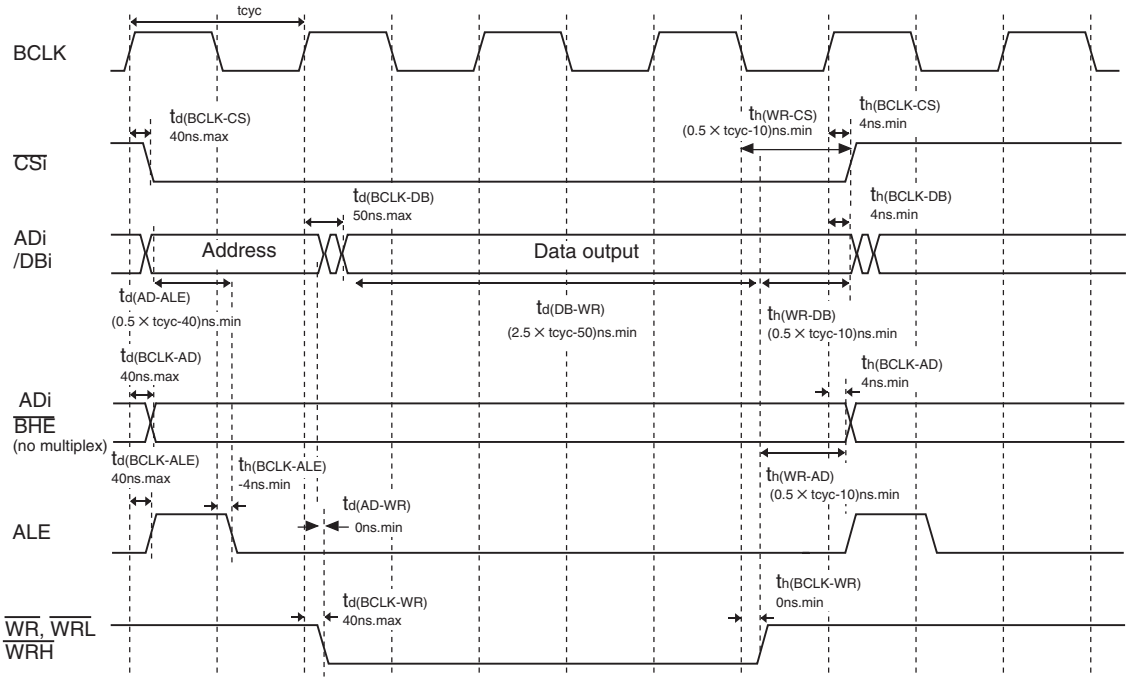

$$tcyc = \frac{1}{f(BCLK)}$$

Measuring conditions :
- VCC = 3.3 V
- Input timing voltage : V_{IL} = 0.6 V, V_{IH} = 2.7 V
- Output timing voltage : V_{OL} = 1.65 V, V_{OH} = 1.65 V

Figure 5.29 Timing Diagram (8)

Appendix 1. Package Dimensions

JEITA Package Code	RENESAS Code	Previous Code	MASS[Typ.]
P-QFP100-14x20-0.65	PRQP0100JB-A	100P6S-A	1.6g

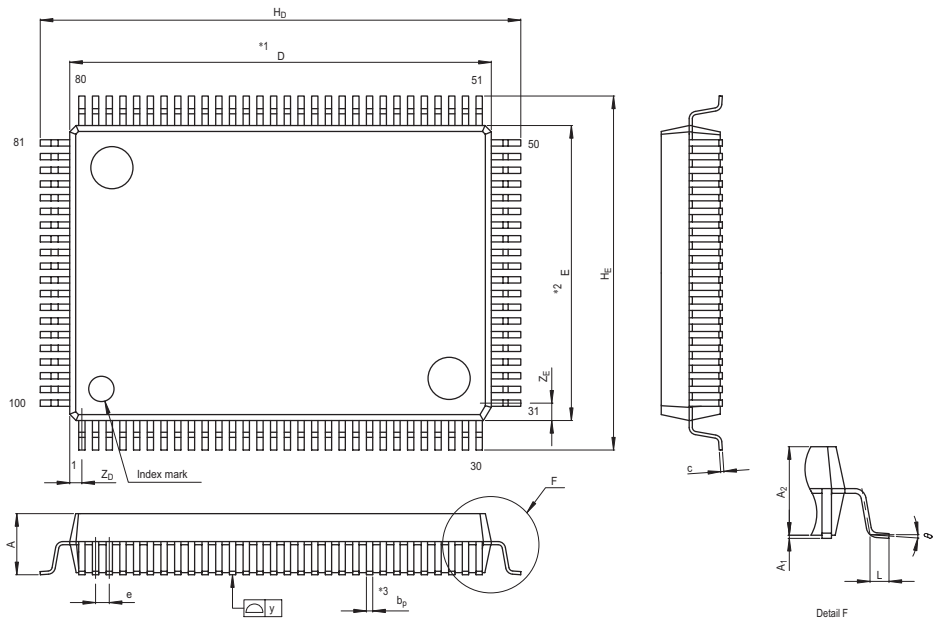

NOTE)
1. DIMENSIONS "*1" AND "*2" DO NOT INCLUDE MOLD FLASH.
2. DIMENSION "*3" DOES NOT INCLUDE TRIM OFFSET.

Reference Symbol	Dimension in Millimeters		
	Min	Nom	Max
D	19.8	20.0	20.2
E	13.8	14.0	14.2
A_2	—	2.8	—
H_D	22.5	22.8	23.1
H_E	16.5	16.8	17.1
A	—	—	3.05
A_1	0	0.1	0.2
b_p	0.25	0.3	0.4
c	0.13	0.15	0.2
θ	0°	—	10°
e	0.5	0.65	0.8
y	—	—	0.10
Z_D	—	0.575	—
Z_E	—	0.825	—
L	0.4	0.6	0.8

JEITA Package Code	RENESAS Code	Previous Code	MASS[Typ.]
P-LQFP100-14x14-0.50	PLQP0100KB-A	100P6Q-A / FP-100U / FP-100UV	0.6g

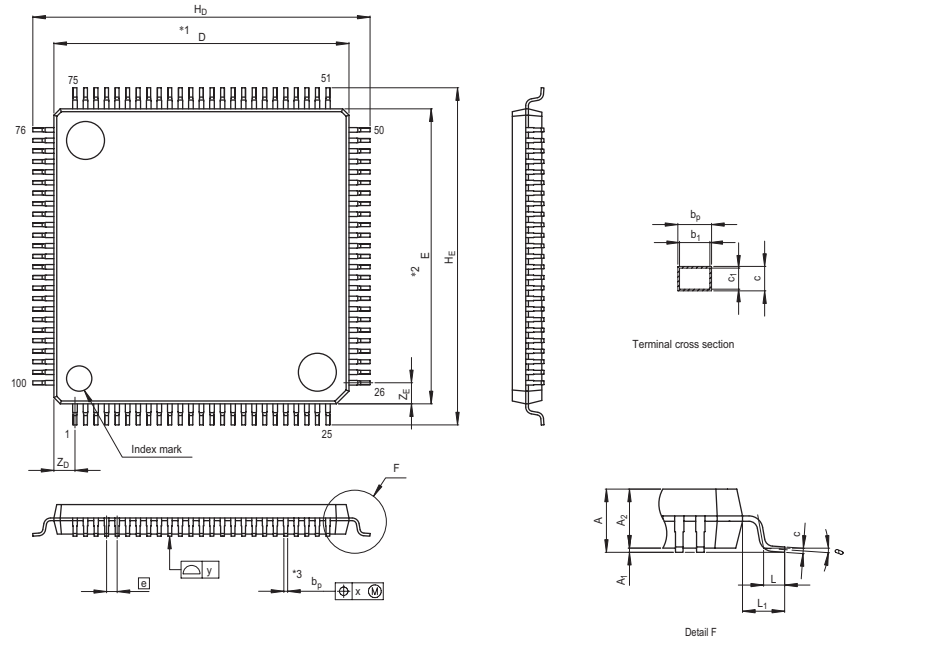

NOTE)
1. DIMENSIONS "*1" AND "*2" DO NOT INCLUDE MOLD FLASH.
2. DIMENSION "*3" DOES NOT INCLUDE TRIM OFFSET.

Reference Symbol	Dimension in Millimeters		
	Min	Nom	Max
D	13.9	14.0	14.1
E	13.9	14.0	14.1
A_2	—	1.4	—
H_D	15.8	16.0	16.2
H_E	15.8	16.0	16.2
A	—	—	1.7
A_1	0.05	0.1	0.15
b_p	0.15	0.20	0.25
b_1	—	0.18	—
c	0.09	0.145	0.20
c_1	—	0.125	—
θ	0°	—	8°
e	—	0.5	—
x	—	—	0.08
y	—	—	0.08
Z_D	—	1.0	—
Z_E	—	1.0	—
L	0.35	0.5	0.65
L_1	—	1.0	—

REVISION HISTORY	M16C/6N Group (M16C/6N5) Data Sheet

Rev.	Date	Description	
		Page	Summary
1.00	Jun. 30, 2003	–	First edition issued
2.00	Nov. 10, 2004	–	Revised edition issued * Words standardizes (on-chip oscillator) * 100P6Q-A (100-pin version) is added. * Revised parts and revised contents are as follows (except for change of a layout and an expressional change).
		1	1. Overview 3rd line: "and LQFP" is added.
		2	Table 1.1 Performance outline of M16C/6N Group (M16C/6N5) • Operation Mode is added. • Address Space is added. • Power Consumption is revised. • "LQFP" is added to Package.
		4	Table 1.2 Product List is revised. Figure 1.2 Type No., Memory Size, and Package: • "GP: Package 100P6Q-A" is added to Package type.
		5	Figure 1.3 Pin Configuration (Top View) (1): "ZP" is added.
		6	Figure 1.4 Pin Configuration (Top View) (2) is added. (100P6Q-A)
		8	Table 1.4 Pin Description (2): "ZP" is added to Timer A.
		12	3. Memory • 5th to 6th lines: The description about the flash memory version (block A) is added. Figure 3.1 Memory Map • Interenal ROM (data area) is added. • NOTES 3, 4 are added and NOTE 5 is revised.
		13	Table 4.1 SFR Information (1) • The value of After Reset in PM1 register is revised. • The value of After Reset in CM2 register is revised.
		19	Table 4.7 SFR Information (7) • The value of After Reset in FMR0 register is revised.
		23	Table 4.11 SFR Information (11) • The value of After Reset in U0C1 register is revised. • The value of After Reset in U1C1 register is revised. • NOTE 1 is added.
		24	Table 4.12 SFR Information (12) • The value of After Reset in DA0, DA1 registers are revised.
		25	Table 5.1 Absolute Maximum Ratings • "Flash Program Erase" in Operating Ambient Temperature is added.
		27	Table 5.3 Recommended Operating Conditions (2) • Parameters of Power Supply Ripple are added. • NOTE 4 is revised. Figure 5.1 Timing of Voltage Fluctuation is added.
		28	Table 5.4 Electrical Characteristics (1): Hysteresis • "CLK4" is revised to "CLK3", and "TA2OUT" is revised to "TA0OUT". • Max. of Standard in $\overline{\text{RESET}}$ is revised from "2.2" to "2.5". • XIN is added.

REVISION HISTORY	M16C/6N Group (M16C/6N5) Data Sheet

Rev.	Date	Description	
		Page	Summary
2.00	Nov. 10, 2004	30	Table 5.6 A/D Conversion Characteristics: "Tolerance Level Impedance" is added.
		31	Table 5.8 Power Supply Circuit Timing Characteristics: "$t_{d(M-L)}$" is deleted.
			Figure 5.2 Power Supply Circuit Timing Diagram is added.
		32	Table 5.10 Memory Expansion Mode and Microprocessor Mode: "$t_{d(BCLK-HLDA)}$" is deleted.
		34	Table 5.21 Serial I/O: Min. of standard in $t_{su(D-C)}$ is revised from "30" to "70".
		35	Table 5.23 Memory Expansion Mode and Microprocessor Mode (for setting with no wait)
			• Max. of Standard in $t_{d(BCLK-ALE)}$ is revised from "25" to "15".
			• $t_{d(BCLK-HLDA)}$ is added.
		36	Table 5.24 Memory Expansion Mode and Microprocessor Mode (for 1- to 3-wait setting and external area access)
			• Max. of Standard in $t_{d(BCLK-ALE)}$ is revised from "25" to "15".
			• $t_{d(BCLK-HLDA)}$ is added.
		37	Table 5.25 Memory Expansion Mode and Microprocessor Mode (for 2- to 3-wait setting, external area access and multiplexed bus selection)
			• $t_{d(BCLK-HLDA)}$ is added.
			• Max. of Standard in $t_{d(BCLK-ALE)}$ is revised from "25" to "15".
		38	Figure 5.4 Timing Diagram (1): "XIN input" is added.
		40, 41	Figures 5.6 and 5.7 Timing Diagram (3) (4): "DB" in Read timing is revised to "DBi".
		42, 43	Figures 5.8 and 5.9 Timing Diagram (5) (6): "DB" in Write timing is revised to "DBi".
		45	Figure 5.11 Timing Diagram (8)
			• "ADi/DB" in Read/Write timing is revised to "ADi/DBi".
		46	Appendix 1. Package Dimensions: 100P6Q-A is added.
2.10	Jun. 24, 2005	–	Revised edition issued
			* The contents of product are revised. (Normal-ver. is added.)
			* Revised parts and revised contents are as follows (except for expressional change).
		2	Table 1.1 Performance outline of M16C/6N Group (M16C/6N5)
			• Performance outline of Normal-ver. is added.
		4	Table 1.2 Product List is revised. (Normal-ver. is added.)
			Figure 1.2 Type No., Memory Size, and Package:
			• "(no): Normal-ver." is added to Characteristics.
		19	Figure 4.7 SFR Information (7): NOTE 1 is revised.
		28	Table 5.4 Electrical Characteristics (1)
			• Measuring Condition of V_{OL} is revised from “L_{OL} = –200μA” to “L_{OL} = 200μA”.
		29	Table 5.5 Electrical Characteristics (2): Mask ROM (5th item)
			• “f(XCIN)” is changed to “(f(BCLK)).
		30	Table 5.6 A/D Conversion Characteristics: “Tolerance Level Impedance” is deleted.
2.40	Aug. 25, 2006	–	Revised edition issued
			* Electric Characteristics of Normal-ver. is added.
			* Revised parts and revised contents are as follows (except for expressional change).
		1	1.1 Applications: Comment of Normal-ver. is added.
		4	Table 1.2 Product Information
			• Status of development is revised and NOTES 1 and 2 are added.

REVISION HISTORY	M16C/6N Group (M16C/6N5) Data Sheet

Rev.	Date	Description	
		Page	Summary
2.40	Aug. 25, 2006	7, 8	Tables 1.3 and 1.4 List of Pin Names (1)(2) are added.
		9	Table 1.5 Pin Functions (1)
			• 3.0 to 5.5 V (Normal-ver.) is added to Description of Power supply input.
		22	Table 4.8 SFR Information (8)
			• The value of After Reset in IDB0 register is revised.
			• The value of After Reset in IDB1 register is revised.
		29	Table 5.3 Recommended Operating Conditions (2)
			• Power supply ripple is deleted. (three items)
			Figure 5.1 Voltage Fluctuation Timing is deleted.
		30	Table 5.4 Electrical Characteristics (1): Hysteresis XIN is deleted.
		48 to 83	5.2 Electrical Characteristics (Normal-ver.) is added.

Renesas Technology Corp. Sales Strategic Planning Div. Nippon Bldg., 2-6-2, Ohte-machi, Chiyoda-ku, Tokyo 100-0004, Japan

Keep safety first in your circuit designs!
1. Renesas Technology Corp. puts the maximum effort into making semiconductor products better and more reliable, but there is always the possibility that trouble may occur with them. Trouble with semiconductors may lead to personal injury, fire or property damage.
Remember to give due consideration to safety when making your circuit designs, with appropriate measures such as (i) placement of substitutive, auxiliary circuits, (ii) use of nonflammable material or (iii) prevention against any malfunction or mishap.

Notes regarding these materials
1. These materials are intended as a reference to assist our customers in the selection of the Renesas Technology Corp. product best suited to the customer's application; they do not convey any license under any intellectual property rights, or any other rights, belonging to Renesas Technology Corp. or a third party.
2. Renesas Technology Corp. assumes no responsibility for any damage, or infringement of any third-party's rights, originating in the use of any product data, diagrams, charts, programs, algorithms, or circuit application examples contained in these materials.
3. All information contained in these materials, including product data, diagrams, charts, programs and algorithms represents information on products at the time of publication of these materials, and are subject to change by Renesas Technology Corp. without notice due to product improvements or other reasons. It is therefore recommended that customers contact Renesas Technology Corp. or an authorized Renesas Technology Corp. product distributor for the latest product information before purchasing a product listed herein.
The information described here may contain technical inaccuracies or typographical errors.
Renesas Technology Corp. assumes no responsibility for any damage, liability, or other loss rising from these inaccuracies or errors.
Please also pay attention to information published by Renesas Technology Corp. by various means, including the Renesas Technology Corp. Semiconductor home page (http://www.renesas.com).
4. When using any or all of the information contained in these materials, including product data, diagrams, charts, programs, and algorithms, please be sure to evaluate all information as a total system before making a final decision on the applicability of the information and products. Renesas Technology Corp. assumes no responsibility for any damage, liability or other loss resulting from the information contained herein.
5. Renesas Technology Corp. semiconductors are not designed or manufactured for use in a device or system that is used under circumstances in which human life is potentially at stake. Please contact Renesas Technology Corp. or an authorized Renesas Technology Corp. product distributor when considering the use of a product contained herein for any specific purposes, such as apparatus or systems for transportation, vehicular, medical, aerospace, nuclear, or undersea repeater use.
6. The prior written approval of Renesas Technology Corp. is necessary to reprint or reproduce in whole or in part these materials.
7. If these products or technologies are subject to the Japanese export control restrictions, they must be exported under a license from the Japanese government and cannot be imported into a country other than the approved destination.
Any diversion or reexport contrary to the export control laws and regulations of Japan and/or the country of destination is prohibited.
8. Please contact Renesas Technology Corp. for further details on these materials or the products contained therein.

RENESAS SALES OFFICES

http://www.renesas.com

Refer to "**http://www.renesas.com/en/network**" for the latest and detailed information.

Renesas Technology America, Inc.
450 Holger Way, San Jose, CA 95134-1368, U.S.A
Tel: <1> (408) 382-7500, Fax: <1> (408) 382-7501

Renesas Technology Europe Limited
Dukes Meadow, Millboard Road, Bourne End, Buckinghamshire, SL8 5FH, U.K.
Tel: <44> (1628) 585-100, Fax: <44> (1628) 585-900

Renesas Technology (Shanghai) Co., Ltd.
Unit 204, 205, AZIACenter, No.1233 Lujiazui Ring Rd, Pudong District, Shanghai, China 200120
Tel: <86> (21) 5877-1818, Fax: <86> (21) 6887-7898

Renesas Technology Hong Kong Ltd.
7th Floor, North Tower, World Finance Centre, Harbour City, 1 Canton Road, Tsimshatsui, Kowloon, Hong Kong
Tel: <852> 2265-6688, Fax: <852> 2730-6071

Renesas Technology Taiwan Co., Ltd.
10th Floor, No.99, Fushing North Road, Taipei, Taiwan
Tel: <886> (2) 2715-2888, Fax: <886> (2) 2713-2999

Renesas Technology Singapore Pte. Ltd.
1 Harbour Front Avenue, #06-10, Keppel Bay Tower, Singapore 098632
Tel: <65> 6213-0200, Fax: <65> 6278-8001

Renesas Technology Korea Co., Ltd.
Kukje Center Bldg. 18th Fl., 191, 2-ka, Hangang-ro, Yongsan-ku, Seoul 140-702, Korea
Tel: <82> (2) 796-3115, Fax: <82> (2) 796-2145

Renesas Technology Malaysia Sdn. Bhd
Unit 906, Block B, Menara Amcorp, Amcorp Trade Centre, No.18, Jalan Persiaran Barat, 46050 Petaling Jaya, Selangor Darul Ehsan, Malaysia
Tel: <603> 7955-9390, Fax: <603> 7955-9510

© 2006. Renesas Technology Corp., All rights reserved. Printed in Japan.

Colophon .6.0