ZL8801-4PH-DEMO1Z

Demonstration Board

AN1948
Rev 0.00
Sep 25, 2014

Description

The ZL8801 is a dual-phase digital DC to DC controller optimized for current sharing. As many as 4 ZL8801's can be operated in parallel to provide even phase counts between 2 and 8 phases. The ZL8801 incorporates compensation-free ChargeMode control to achieve single-cycle transient response.

The ZL8801 supports a wide range of output voltages (0.54V to 5.5V) operating from input voltages between 4.5Vand 14V.

The ZL8801-4PH-DEMO1Z evaluation board is a 6-layer board configured as a 4-phase 160A synchronous buck converter. Sequencing, margining, fault spreading and other features can be evaluated using this board.

A USB to PMBus™ adapter module is used to connect the evaluation board to a host PC running Microsoft Windows.

Specifications

TABLE 1. EVALUATION BOARD SPECIFICATIONS

SPEC	DESCRIPTION	MIN	TYP	MAX	UNIT
VIN	Input Voltage Range	6.5		14	V
VOUT	Output Voltage Range, Default V_{OUT} = 1V	0.6		3.6	V
IOUT	Rated Output Current	0		160	A
f_{SW}	Switching Frequency	400		1000	kHz
V_{RIPPLE}	Output Ripple Voltage		±1		%

Key Features

- 160A 4-phase synchronous buck converter with ChargeMode™ control
- On-the-fly V_{OUT} control
- Configurable with PMBus
- V_{IN} range 4.5V to 14V
- V_{OUT} range 0.54V to 3.6V
- I^2C/SMBus interface, PMBus compatible
- Output voltage and current protection

References

- ZL8801 datasheet

Ordering Information

PART NUMBER	DESCRIPTION
ZL8801-4PH-DEMO1Z	ZL8801 Demonstration Kit (Demonstration Board, USB Adapter, Cable)

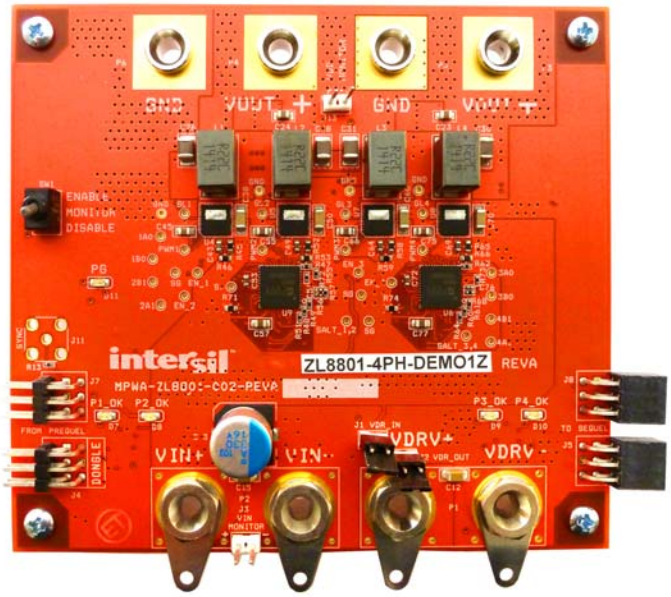

FIGURE 1. ZL8801-4PH-DEMO1Z BOARD

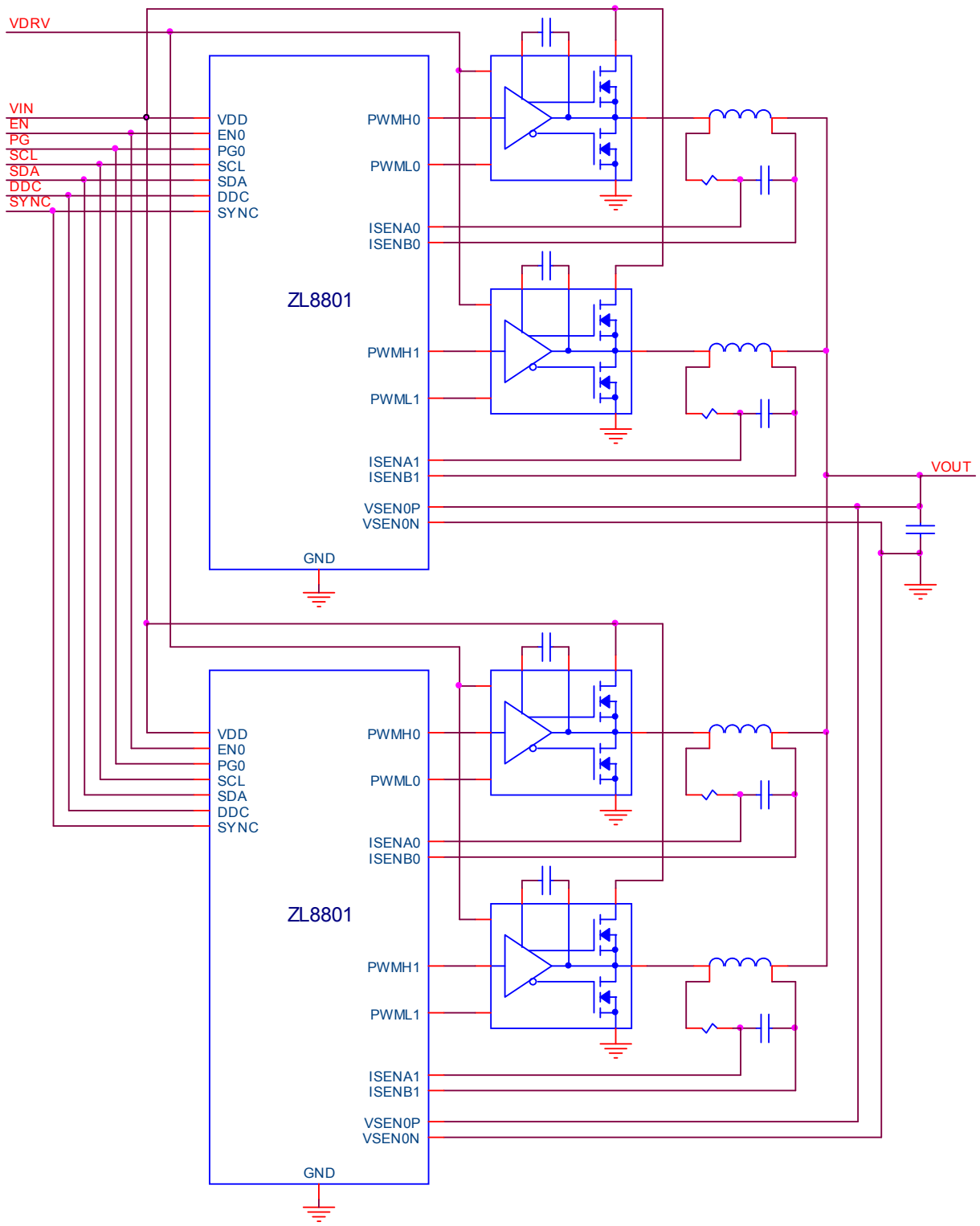

FIGURE 2. ZL8801-4PH-DEMO1Z BLOCK DIAGRAM

Functional Description

The ZL8801-4PH-DEMO1Z provides all circuitry required to demonstrate most of the features of the ZL8801 in a multidevice current sharing application. The ZL8801-4PH-DEMO1Z has a functionally-optimized ZL8801 circuit layout that allows efficient operation up to the maximum output current (with airflow). Power and load connections are provided by Banana jacks.

When the ZL8801-4PH-DEMO1Z board is removed from the shipping box it is ready to be powered on by using the Enable Switch. PMBus operation can be configured by using the PowerNavigator™ GUI. Headers are provided at opposite ends of the board for connecting a USB to SMBus Dongle and for daisy chaining other Intersil Digital Power Evaluation and Demo Boards.

A majority of the features of the ZL8801, such as compensation free ChargeMode control, soft-start delay, ramp times, supply sequencing, and voltage margining are available on this evaluation board. For sequencing and Fault Spreading demonstration, the board can be connected to any other demonstration board that supports the Digital-DC™ (DDC) bus. Voltage Tracking is not supported on the ZL8801-4PH-DEMO1Z. Figure 1 shows the top view of the PWB.

Operating Range

The ZL8801-4PH-DEMO1Z is preconfigured to the following specifications:

TABLE 2.

V_{IN}	V_{OUT}	I_{OUT}	f_{SW}	FAULT RESPONSE
6.5V to 14V	1.0V	40A/Ph, 160A	515kHz	Shutdown

The ZL8801-4PH-DEMO1Z's dual ZL8801 controllers reside at address 0x20 and 0x21. The preconfigured operation parameters can be changed by using the PowerNavigator GUI.

The ZL8801-4PH-DEMO1Z has been optimized for a nominal switching frequency of 515kHz, this frequency provides a good compromise between packaging density and efficiency relative to the selected power train. The switching frequency can be changed to operate anywhere between 300kHz and 1000kHz.

PCB Layout Guidelines

The ZL8801-4PH-DEMO1Z Board layout has been optimized for power density, electrical and thermal performance. The following key features are:

- Thermal vias connected to a large common SGND plane is used for each ZL8801 on Inner 1.
- I_{SENSE} nets are Kelvin connected to each output inductor.
- V_{SENSE} nets are Kelvin connected to the point of regulation.
- One SGND plane established for both ZL8801 controllers.
- SGND plane for each controller duplicated on bottom layer with thermal vias to aid in heat removal.

Quick Start Guide

Stand Alone Operation

1. Set Enable switch to "Disable".
2. Apply Load to V_{OUT+}/V_{OUT-}.
3. Connect the USB to SMBus adapter to J4 of the ZL8801-4PH-DEMO1Z.
4. Connect the USB adapter cable to the host computer.
5. Connect V_{IN+}/V_{IN-} to a suitable input power source (supply turned off).
6. Install jumpers J1 and J2 to use onboard VRDRV linear regulator.
7. Turn input power supply on.
8. Set Enable switch to "Enable".
9. Monitor ZL8801-4PH-DEMO1Z board with an oscilloscope.
10. To demonstrate advanced features like Sequencing, and Fault Spreading connect other compatible Intersil Digital Power boards to J5 and J8.

USB (PMBus) Operation

1. Set the Enable switch to "Disable".
2. Apply load to V_{OUT+}/V_{OUT-}.
3. Connect the USB to SMBus adapter to J4 of the ZL8801-4PH-DEMO1Z.
4. Connect the USB adapter cable to the host computer.
5. Connect V_{IN+}/V_{IN-} to a suitable input power source (supply turned off).
6. Install jumpers J1 and J2 to use onboard VRDRV linear regulator.
7. Install the PowerNavigator software on the host computer.
8. Turn the input power source on, the demo board comes configured to produce an output voltage of 1.0V. Use the GUI or modify the configuration file to operate at Vout up to 3.6V.
9. Run the PowerNavigator program and select the "Monitor Hardware" option and then click the Start button.
10. Using the Monitor View change the enable mode to "PMBus Enable".
11. Click on the Enable button to turn on the ZL8801-4PH-DEMO1Z and use the GUI to monitor.

Default Configuration File

The ZL8801-4PH-DEMO1Z comes preconfigured with the following configuration files ZL8801_0x20.txt and ZL8801_0x21.txt the files are printed below for convenience.

```
# ZL8801_0x20
RESTORE_FACTORY
STORE_DEFAULT_ALL
STORE_USER_ALL
RESTORE_DEFAULT_ALL
STORE_DEFAULT_ALL
RESTORE_USER_ALL
FREQUENCY_SWITCH          515
INTERLEAVE                0x0000
SEQUENCE                  0x0000
TON_DELAY                 5
TON_RISE                  5
TOFF_DELAY                5
TOFF_FALL                 5
TRACK_CONFIG              0x00
ON_OFF_CONFIG             0x17
VOUT_COMMAND              1.0
VOUT_MAX                  3.5
VOUT_MARGIN_HIGH          1.05
VOUT_MARGIN_LOW           0.95
VOUT_MARGIN_RATIO         0xCA80
VOUT_DROOP                0.20
VOUT_OV_FAULT_LIMIT       1.20
VOUT_OV_FAULT_RESPONSE    0x80
VOUT_UV_FAULT_LIMIT       0.80
VOUT_UV_FAULT_RESPONSE    0X80
VOUT_CAL_OFFSET           0.0
VOUT_TRANSITION_RATE      1.0
MIN_VOUT_REG              150
VIN_OV_WARN_LIMIT         13.0
VIN_OV_FAULT_LIMIT        14.4
VIN_OV_FAULT_RESPONSE     0x80
VIN_UV_WARN_LIMIT         6.50
VIN_UV_FAULT_LIMIT        6.00
VIN_UV_FAULT_RESPONSE     0x80
POWER_GOOD_ON             0.90
POWER_GOOD_DELAY          5.00
IOUT_OC_FAULT_LIMIT       62
IOUT_UC_FAULT_LIMIT       -50.0
IOUT0_CAL_GAIN            0.25
IOUT0_CAL_OFFSET          -1.60
IOUT1_CAL_GAIN            0.25
IOUT1_CAL_OFFSET          -1.60
IOUT_AVG_OC_FAULT_LIMIT   62.0
IOUT_AVG_UC_FAULT_LIMIT   -62.0
IIN_CAL_GAIN              0.0
OT_WARN_LIMIT             110.0
OT_FAULT_LIMIT            125.0
OT_FAULT_RESPONSE         0x80
UT_WARN_LIMIT             -30.0
UT_FAULT_LIMIT            -45.0
UT_FAULT_RESPONSE         0x80
DEADTIME                  0x0C0C
DEADTIME_CONFIG           0x8686
DEADTIME_MAX              0x0C0C
ISENSE_CONFIG             0x5A04
USER_CONFIG               0x0603
MFR_USER_CONFIG           0x0002
DDC_CONFIG                0x103
OVUV_CONFIG               0x00
DEADTIME                  0x2020
DEADTIME_CONFIG           0x8686
ASCR_CONFIG               0x15A00C8
TRACK_CONFIG              0x00
DDC_GROUP                 0x202000
USER_GLOBAL_CONFIG        0x0002
STORE_USER_ALL
```

```
# ZL8801-1 0x21
RESTORE_FACTORY
STORE_DEFAULT_ALL
STORE_USER_ALL
RESTORE_DEFAULT_ALL
STORE_DEFAULT_ALL
RESTORE_USER_ALL
FREQUENCY_SWITCH          515
INTERLEAVE                0x0000
SEQUENCE                  0x0000
TON_DELAY                 5
TON_RISE                  5
TOFF_DELAY                5
TOFF_FALL                 5
TRACK_CONFIG              0x00
ON_OFF_CONFIG             0x17
VOUT_COMMAND              1.0
VOUT_MAX                  3.5
VOUT_MARGIN_HIGH          1.05
VOUT_MARGIN_LOW           0.95
VOUT_MARGIN_RATIO         0xCA80
VOUT_DROOP                0.20
VOUT_OV_FAULT_LIMIT       1.20
VOUT_OV_FAULT_RESPONSE    0x80
VOUT_UV_FAULT_LIMIT       0.80
VOUT_UV_FAULT_RESPONSE    0x80
VOUT_CAL_OFFSET           0.0
VOUT_TRANSITION_RATE      1.0
MIN_VOUT_REG              150
VIN_OV_WARN_LIMIT         13.0
VIN_OV_FAULT_LIMIT        14.4
VIN_OV_FAULT_RESPONSE     0x80
VIN_UV_WARN_LIMIT         6.50
VIN_UV_FAULT_LIMIT        6.00
VIN_UV_FAULT_RESPONSE     0x80
POWER_GOOD_ON             0.90
POWER_GOOD_DELAY          5.00
IOUT_OC_FAULT_LIMIT       62
```

IOUT_UC_FAULT_LIMIT	-50.0
IOUT0_CAL_GAIN	0.25
IOUT0_CAL_OFFSET	-1.60
IOUT1_CAL_GAIN	0.25
IOUT1_CAL_OFFSET	-1.60
IOUT_AVG_OC_FAULT_LIMIT	62.0
IOUT_AVG_UC_FAULT_LIMIT	-62.0
IIN_CAL_GAIN	0.0
OT_WARN_LIMIT	110.0
OT_FAULT_LIMIT	125.0
OT_FAULT_RESPONSE	0x80
UT_WARN_LIMIT	-30.0
UT_FAULT_LIMIT	-45.0
UT_FAULT_RESPONSE	0x80
DEADTIME	0x0C0C
DEADTIME_CONFIG	0x8686
DEADTIME_MAX	0x0C0C
ISENSE_CONFIG	0x5A04
USER_CONFIG	0x0603
MFR_USER_CONFIG	0x0004
DDC_CONFIG	0x2103
OVUV_CONFIG	0x00
DEADTIME	0xC0C
DEADTIME_CONFIG	0x8686
ASCR_CONFIG	0x15A00C8
TRACK_CONFIG	0x00
DDC_GROUP	0x202000
USER_GLOBAL_CONFIG	0x0004
STORE_USER_ALL	

ZL8801-4PH-DEMO1Z Schematic (Phase 1,2)

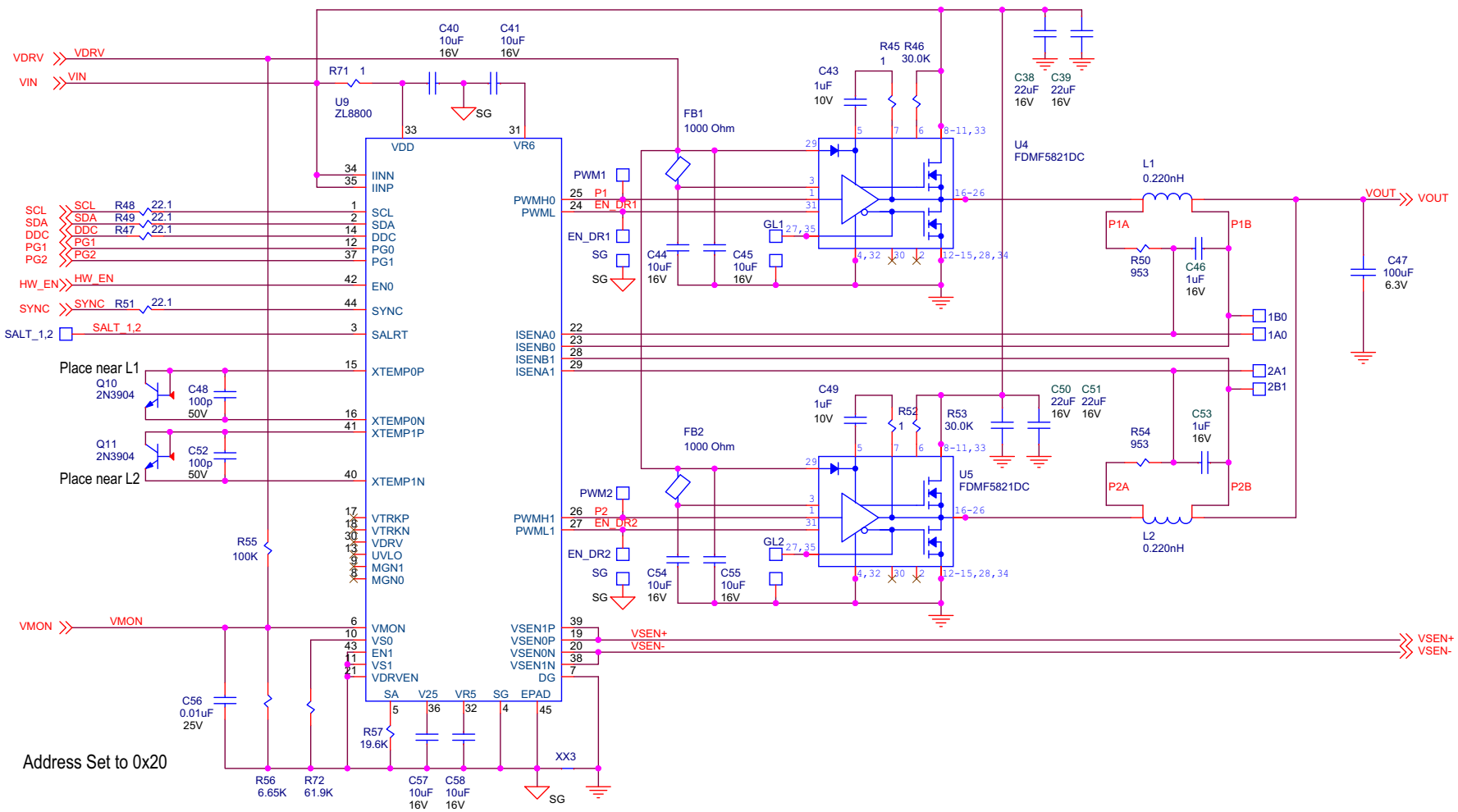

ZL8801-4PH-DEMO1Z Schematic (Interface)

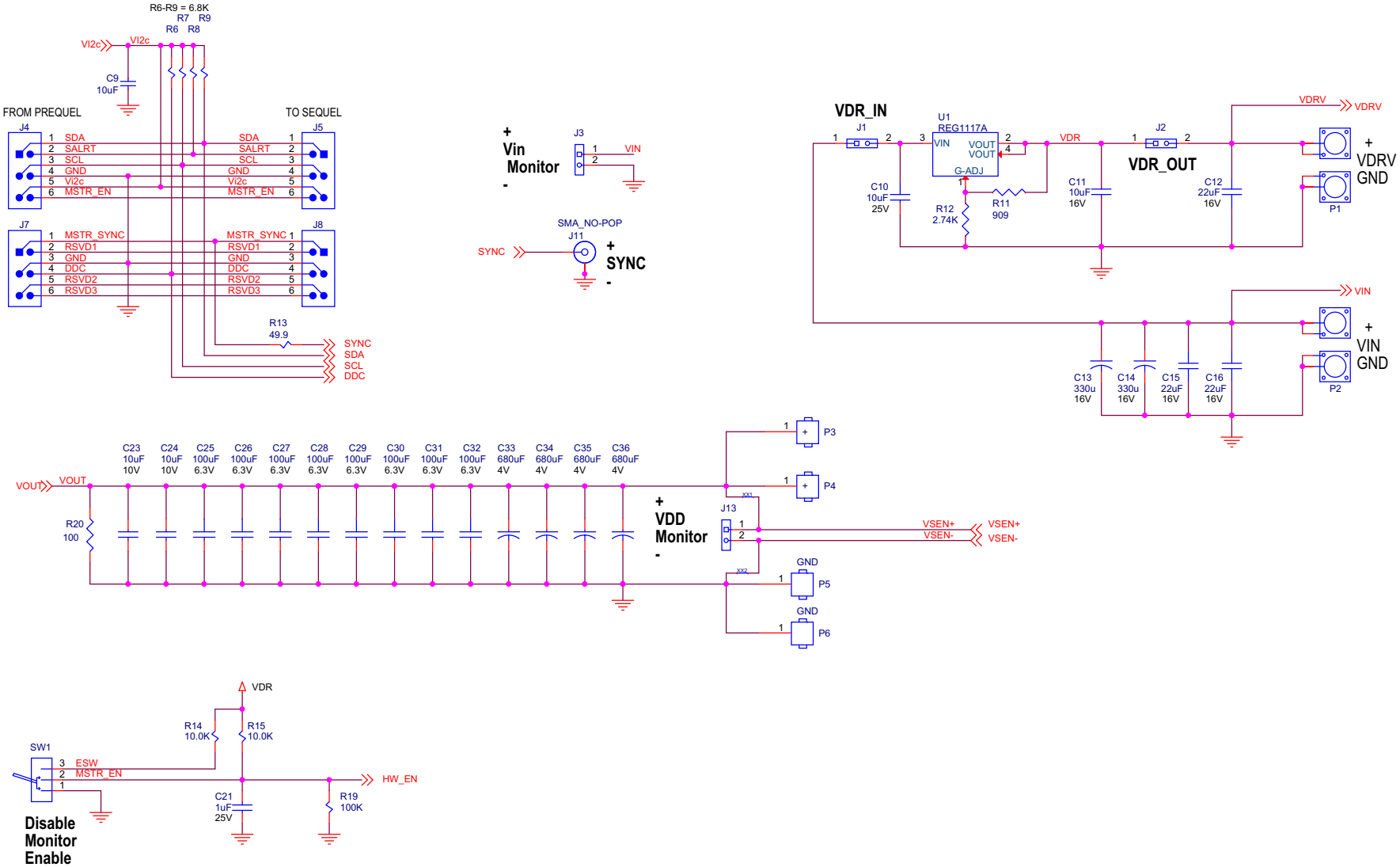

ZL8801-4PH-DEMO1Z Schematic (Phase 3,4)

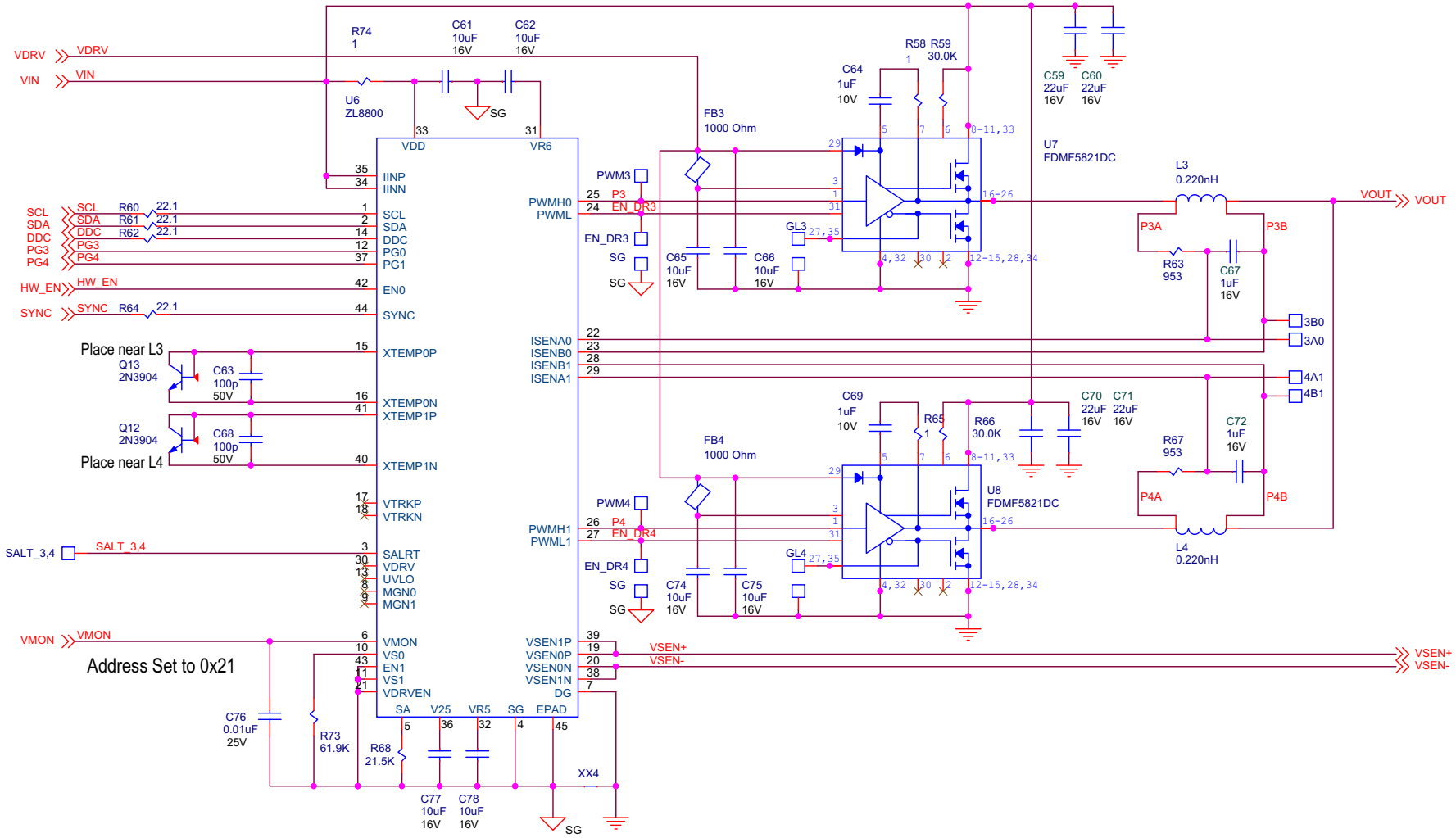

ZL8801 Schematic (Power-Good Logic)

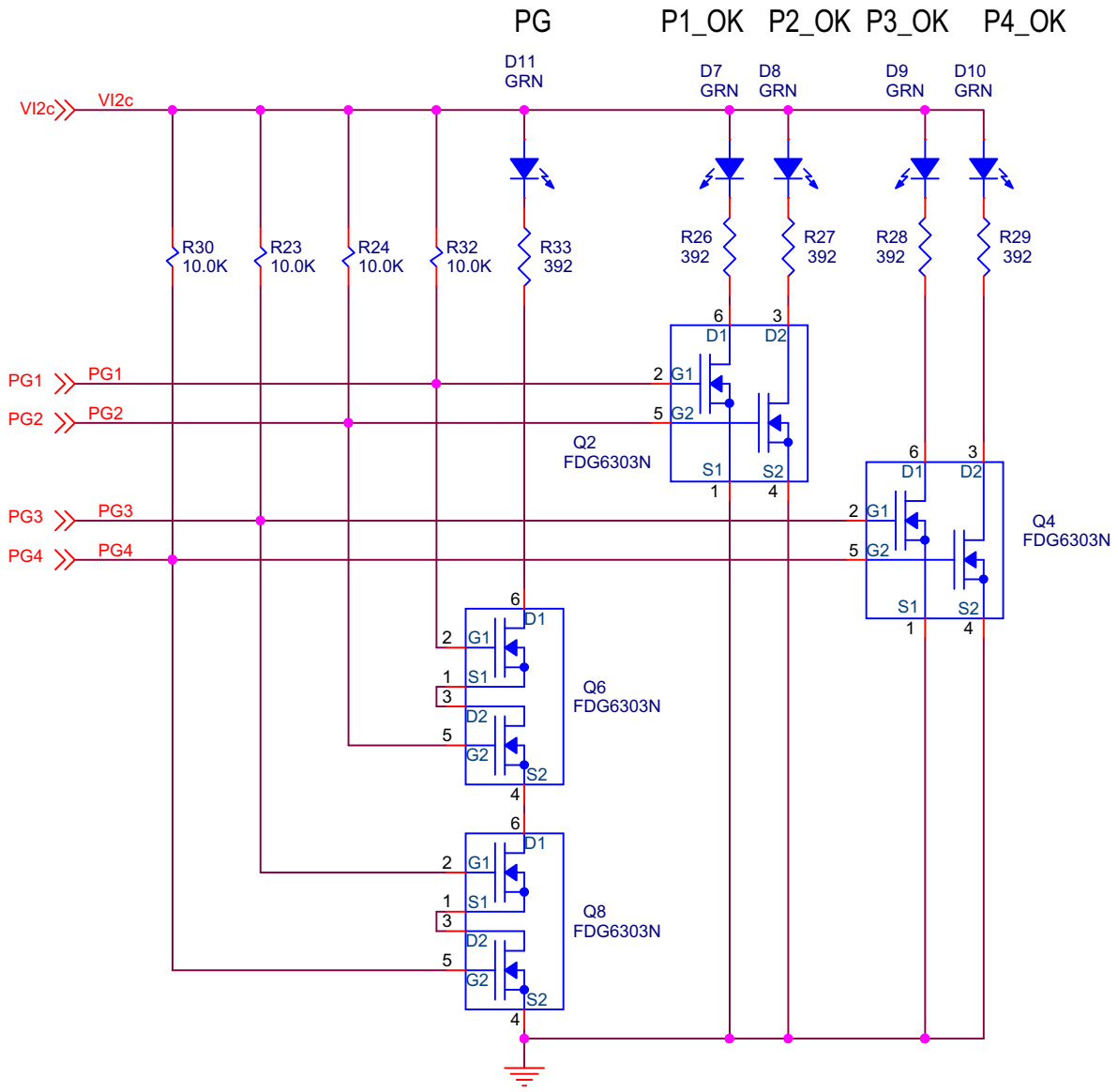

Bill of Materials

ITEM	QTY	REFERENCE	VALUE	TOL	RATING	TYPE	PCB FOOTPRINT	MANUFACTURER	PART NUMBER
1	1	C9	10µF	10%	10V	X7R	SM0805	Taiyo Yuden	LMK212B7106KG-TD
2	1	C10	10µF	10%	25V	X5R	SM1206	Panasonic - ECG	ECJ-3YB1E106K
3	17	C11, C40, C41, C44, C45, C54, C55, C57, C58, C61, C62, C65, C66, C74, C75, C77, C78	10µF	10%	16V	X5R	SM0805	TDK	C2012X5R1C106K/0.85
4	11	C12, C15, C16, C38, C39, C50, C51, C59, C60, C70, C71	22µF	20%	16V	X5R	SM1206	Murata	GRM31CR61C226ME15L
5	2	C13, C14	330µF	20%	16V	AL POLY	SM_CAP_10.5X10.5_PXA_FLD	United Chemi-Con	APXA160ARA331MJC0G
6	1	C21	1µF	10%	25V	X5R	SM0603	Taiyo Yuden	TMK107BJ105KA-T
7	2	C23, C24	10µF	10%	10V	X7R	SM0805	Murata	GRM21BR71A106KE51L
8	9	C25, C26, C27, C28, C29, C30, C31, C32, C47	100µF		6.3V	X5R	SM1210	Taiyo Yuden	JMK325BJ107MY-T
9	4	C33, C34, C35, C36	680µF	20%	4V	AL POLY	SM7343_KEMET_T530_BC	Kemet	T530Y687M004ATE005
10	4	C43, C49, C64, C69	1µF	10%	10V	X7R	SM0603	Taiyo Yuden	LMK107B7105KA-T
11	4	C46, C53, C67, C72	1µF	10%	16V	X7R	SM0603	TDK Corporation	C1608X7R1C105K
12	4	C48, C52, C63, C68	100pF	5%	50V	C0G	SM0402_WSS	MURATA	GRM1555C1H101JZ01D
13	2	C56, C76	0.01µF	10%	25V	X7R	SM0402	Kemet	C0402C103K3RACTU
14	5	D7, D8, D9, D10, D11	GRN		2V		SM0805	Chicago Miniature	CMD17-21VGC
15	4	FB1, FB2, FB3, FB4	1000Ω		150mA	Ferrite	SM0402	Taiyo Yuden	BK1005HM102-T
16	4	J1, J2, J3, J13	2 POS			VERT	SIP2/100	Samtec	TSW-102-07-L-S
17	2	J4, J7	HDR_3X2_RA			RA	HDRM3DUALRA100X100	SAMTEC	TSW-103-08-T-D-RA
18	2	J5, J8	SKT_3X2_RA			RA	HDRF3DUALRA100X100	SAMTEC	SSQ-103-02-T-D-RA
19	1	J11	SMA_NO-POP				SMA_PCB_VJACK	Emerson	142-9701-211
20	4	L1, L2, L3, L4	0.220nH		70	Inductor	IND_SL3732_RXXXXX	ITG	SL3732_R22KHF
21	2	P1, P2	JACK		15A		JACK	Emerson	108-0740-001
22	2	P3, P4					CON_LUG		
23	2	P5, P6	GND				CON_LUG		
24	4	Q2, Q4, Q6, Q8	FDG6303N		25V	Dual N-Chan	SC70_6	Fairchild	FDG6303N
25	4	Q10, Q11, Q12, Q13	2N3904		40V	NPN	SOT-23	ON SEMI	MMBT3904LT1G
26	4	R6, R7, R8, R9	6.8k	1%		1/16W	SM0402	Panasonic - ECG	ERJ-2RKF6801X
27	1	R11	909	1%	100mW	THK FILM	SM0603	Panasonic - ECG	ERJ-3EKF9090V
28	1	R12	2.74k	1%	100mW	THK FILM	SM0603	Panasonic - ECG	ERJ-3EKF2741V
29	1	R13	49.9	1%	100mW	THK FILM	SM0402	Panasonic - ECG	ERJ-2RKF49R9X
30	2	R14, R15	10.0k	1%	63mW	THK FILM	SM0402	Panasonic - ECG	ERJ-2RKF1002X
31	1	R19	100k	1%	63mW	THK FILM	SM0402	Panasonic - ECG	ERJ-2RKF1003X
32	1	R20	100	1%	100mW	THK FILM	SM0805	Panasonic - ECG	ERJ-6ENF1000V
33	4	R23, R24, R30, R32	10.0k	1%		1/16W	SM0402	Yageo	RC0402FR-0710KL
34	5	R26, R27, R28, R29, R33	392	1%		THK FILM	SM0603	Panasonic - ECG	ERJ-3EKF3920V

Bill of Materials (Continued)

ITEM	QTY	REFERENCE	VALUE	TOL	RATING	TYPE	PCB FOOTPRINT	MANUFACTURER	PART NUMBER
35	6	R45, R52, R58, R65, R71, R74	1	1%		1/16W	SM0603	Panasonic - ECG	ERJ-3RQF1R0V
36	4	R46, R53, R59, R66	30.0k	1%		1/16W	SM0603	Panasonic - ECG	ERJ-2GEJ303X
37	8	R47, R48, R49, R51, R60, R61, R62, R64	22.1	1%			SM0402	Panasonic	ERJ-2RKF22R1X
38	4	R50, R54, R63, R67	953	1%		Resistor	SM0603	Panasonic	ERJ-3EKF9530V
39	1	R55	100k	1%		1/16W	SM0402	Vishay/Dale	CRCW0402100KFKED
40	1	R56	6.65k	1%		1/16W	SM0402	Panasonic - ECG	ERJ-2RKF6651X
41	1	R57	19.6k	1%		1/16W	SM0402	Panasonic - ECG	ERJ-2RKF1962X
42	1	R68	21.5k	1%		1/16W	SM0402	Panasonic - ECG	ERJ-2RKF2152X
43	2	R72, R73	61.9k	1%		1/16W	SM0402	Panasonic - ECG	ERJ-2RKF6192X
44	1	SW1	SW_SPDT			PCB VERT	SW_TOG_ULTRAMIN_SPDT	NKK	G13AP-RO
45	1	U1	REG1117A				SOT_223_1234	Texas Instruments	REG1117A
46	4	U4, U5, U7, U8	FDMF5821DC		30V		PQFN31_SPS_5X5_P5S	Fairchild	FDMF5821DC
47	2	U6, U9	ZL8800				MLF44_7X7_DP	Intersil	ZL8801

Typical Performance Curves

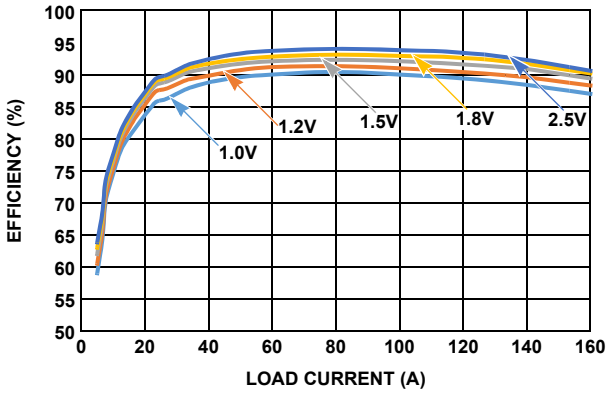

FIGURE 3. EFFICIENCY V_{IN} = 12V, f_{SW} = 300kHz

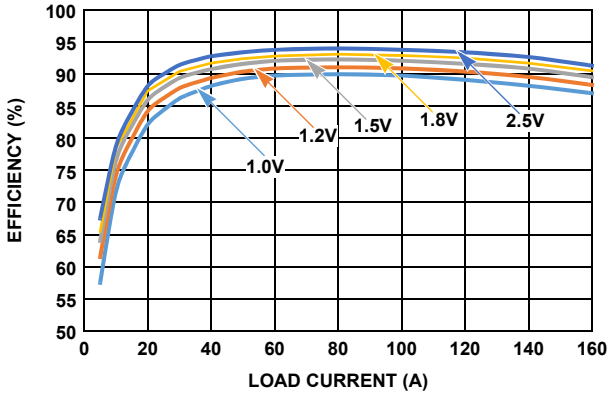

FIGURE 4. EFFICIENCY V_{IN} = 12V, f_{SW} = 400kHz

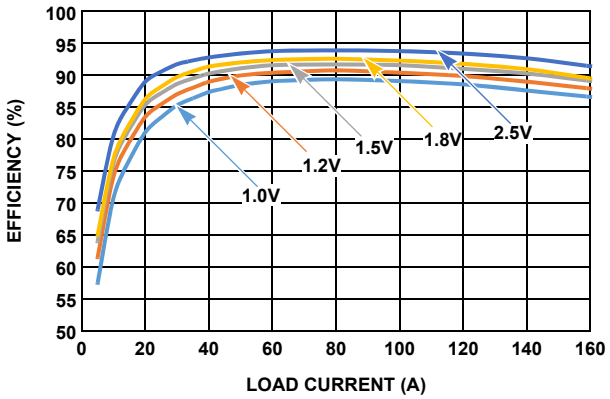

FIGURE 5. EFFICIENCY V_{IN} = 12V, f_{SW} = 515kHz

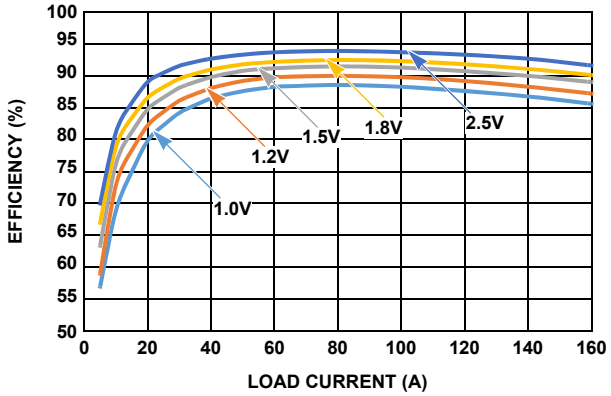

FIGURE 6. EFFICIENCY V_{IN} = 12V, f_{SW} = 615kHz

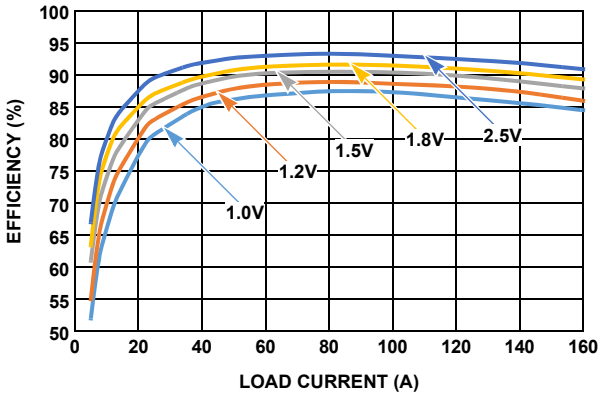

FIGURE 7. EFFICIENCY V_{IN} = 12V, f_{SW} = 800kHz

Measured Data

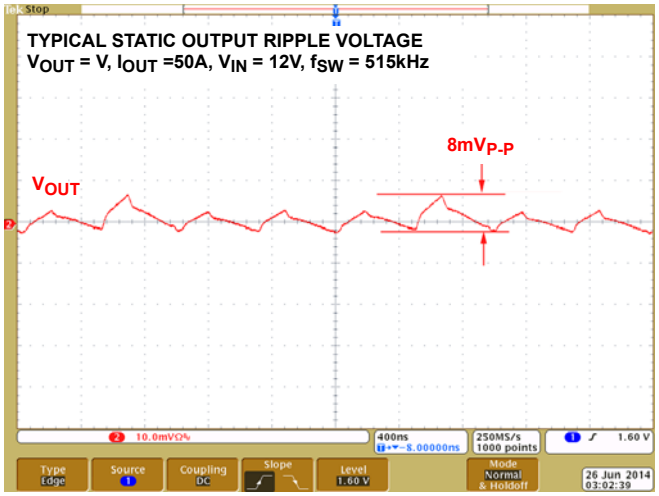

FIGURE 8. STATIC RIPPLE

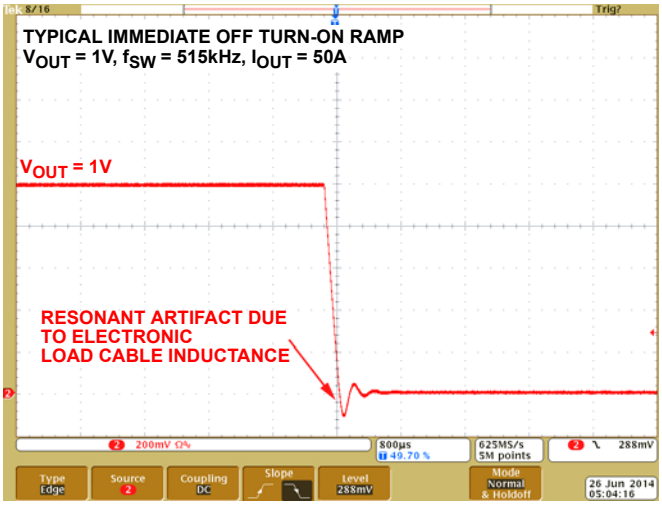

FIGURE 9. TURN-OFF RAMP

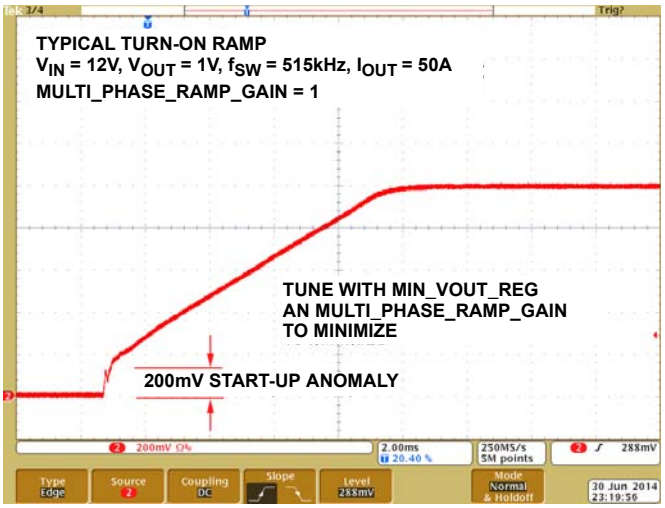

FIGURE 10. TURN-ON RAMP

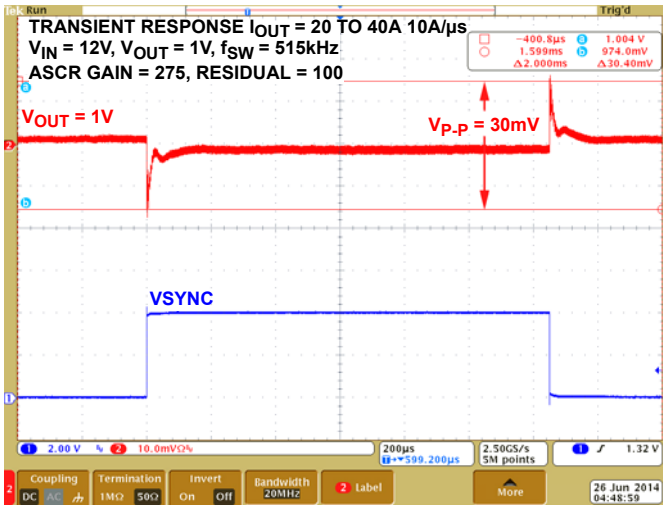

FIGURE 11. TRANSIENT RESPONSE

ZL8801-4PH-DEMO1Z Evaluation Board and Dongle

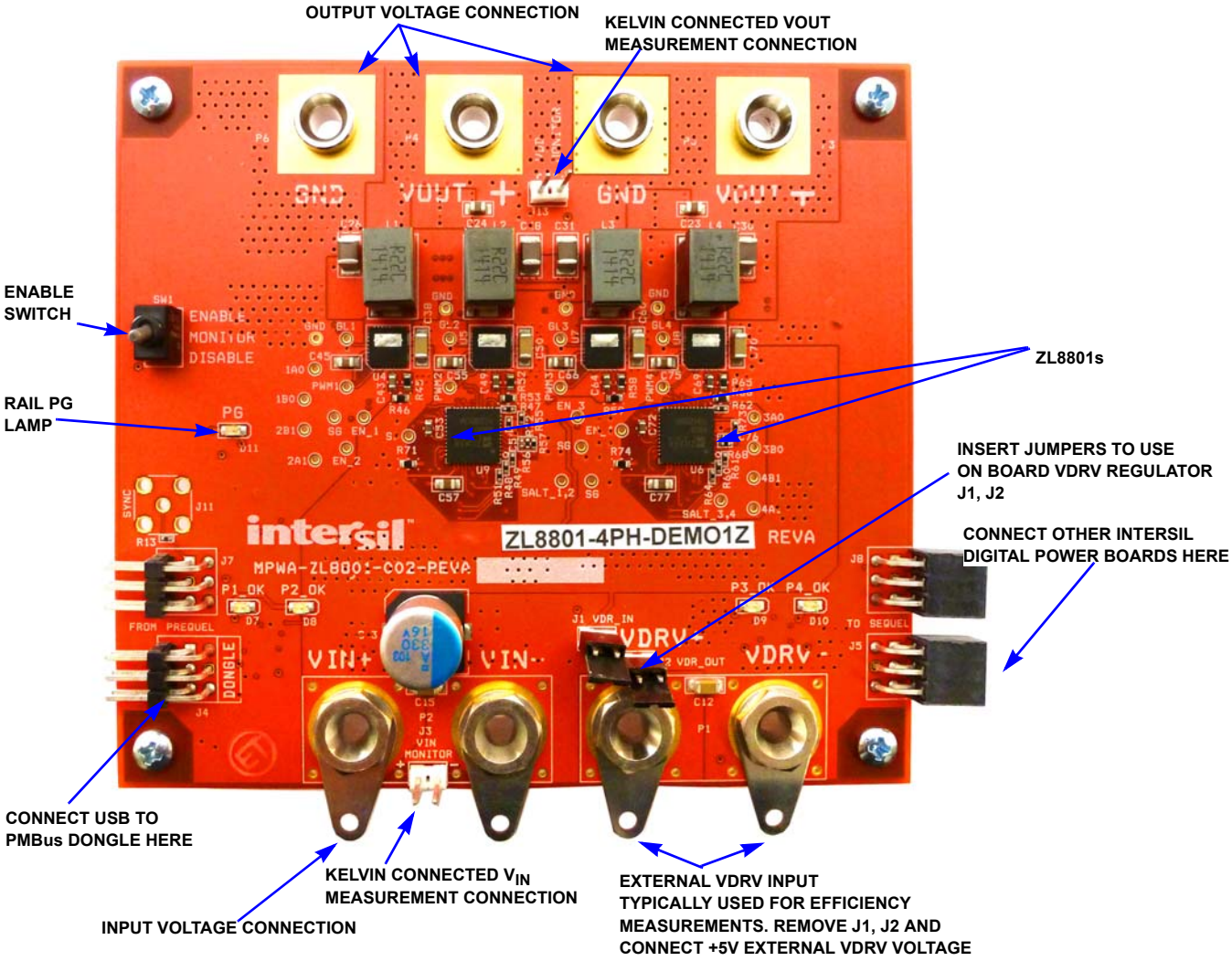

FIGURE 12. ZL8801-4PH-DEMO1Z CRITICAL COMPONENT LOCATION

FIGURE 13. USB TO PMBus DONGLE

ZL8801-4PH-DEMO1Z Layout

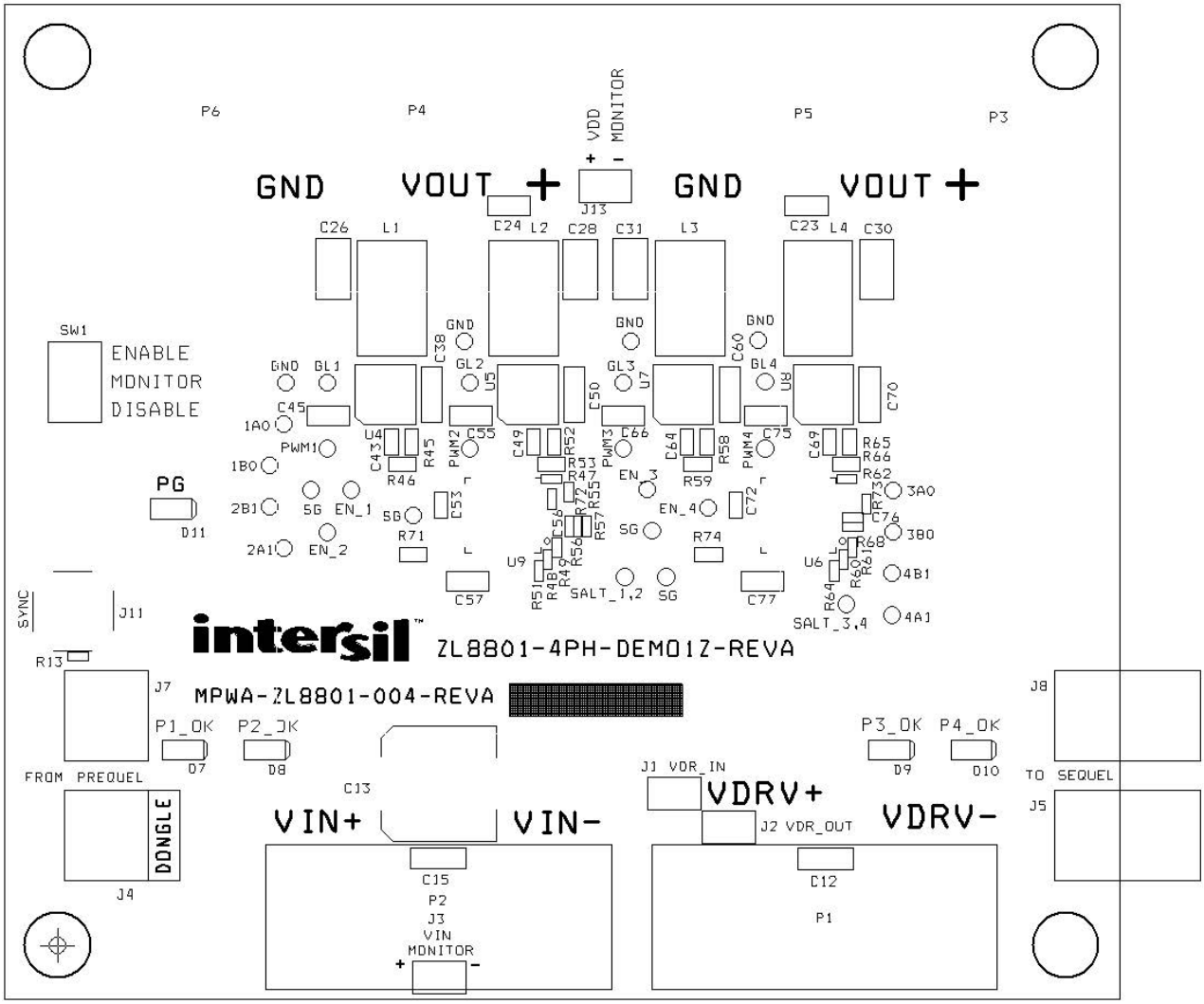

FIGURE 14. TOP SILKSCREEN

ZL8801-4PH-DEMO1Z Layout (Continued)

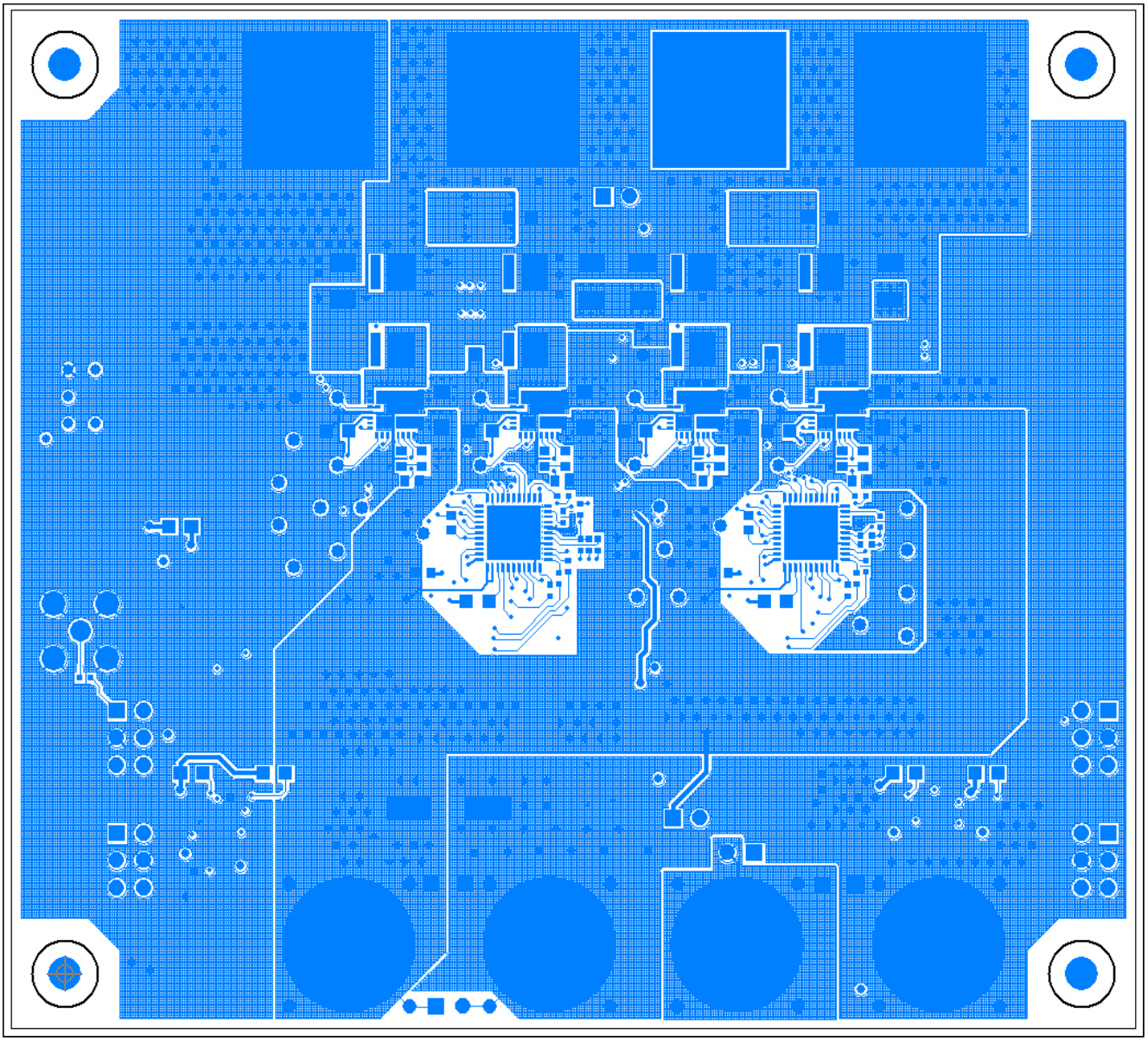

FIGURE 15. TOP ETCH

ZL8801-4PH-DEMO1Z Layout (Continued)

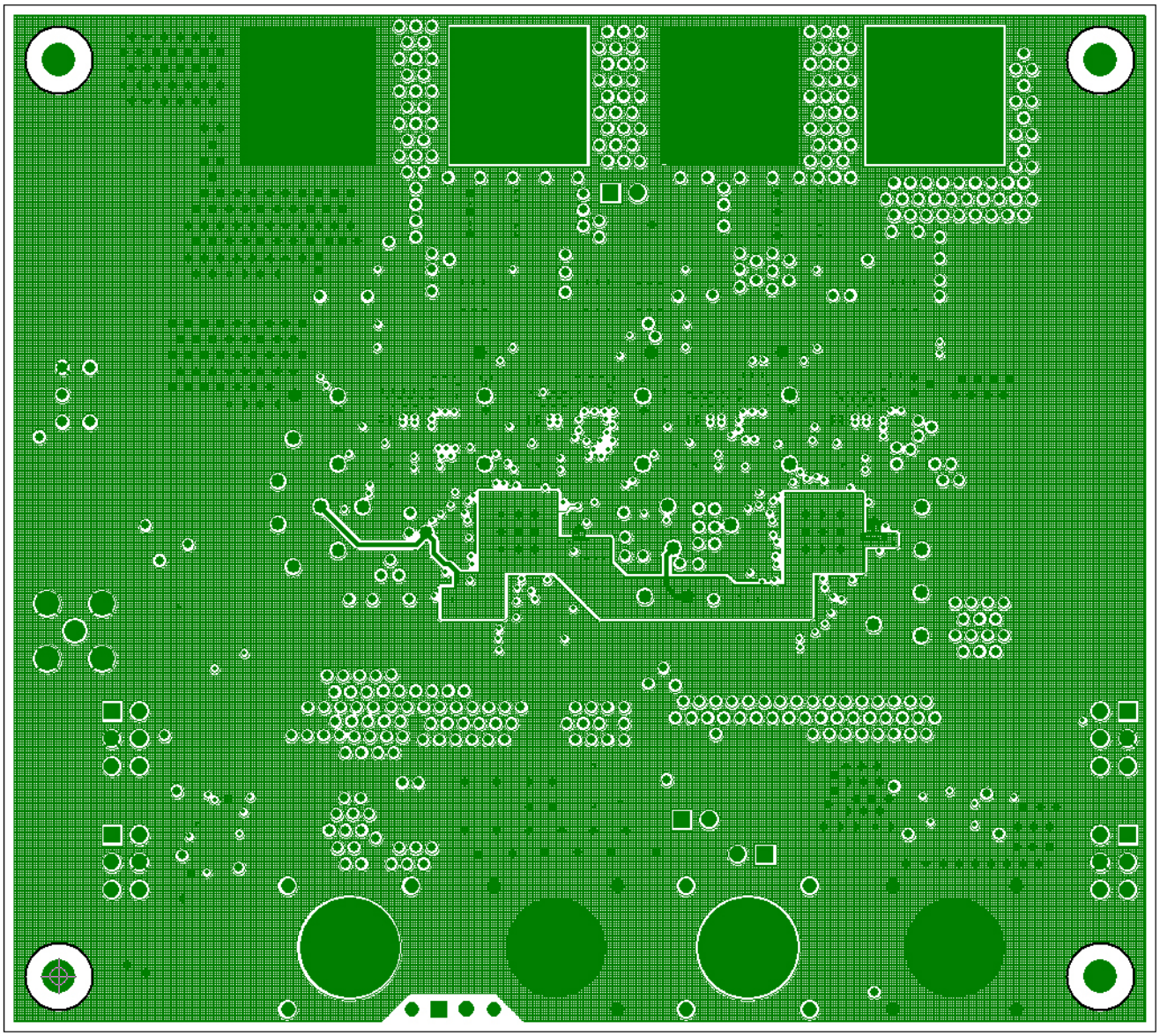

FIGURE 16. INNER 1

ZL8801-4PH-DEMO1Z Layout (Continued)

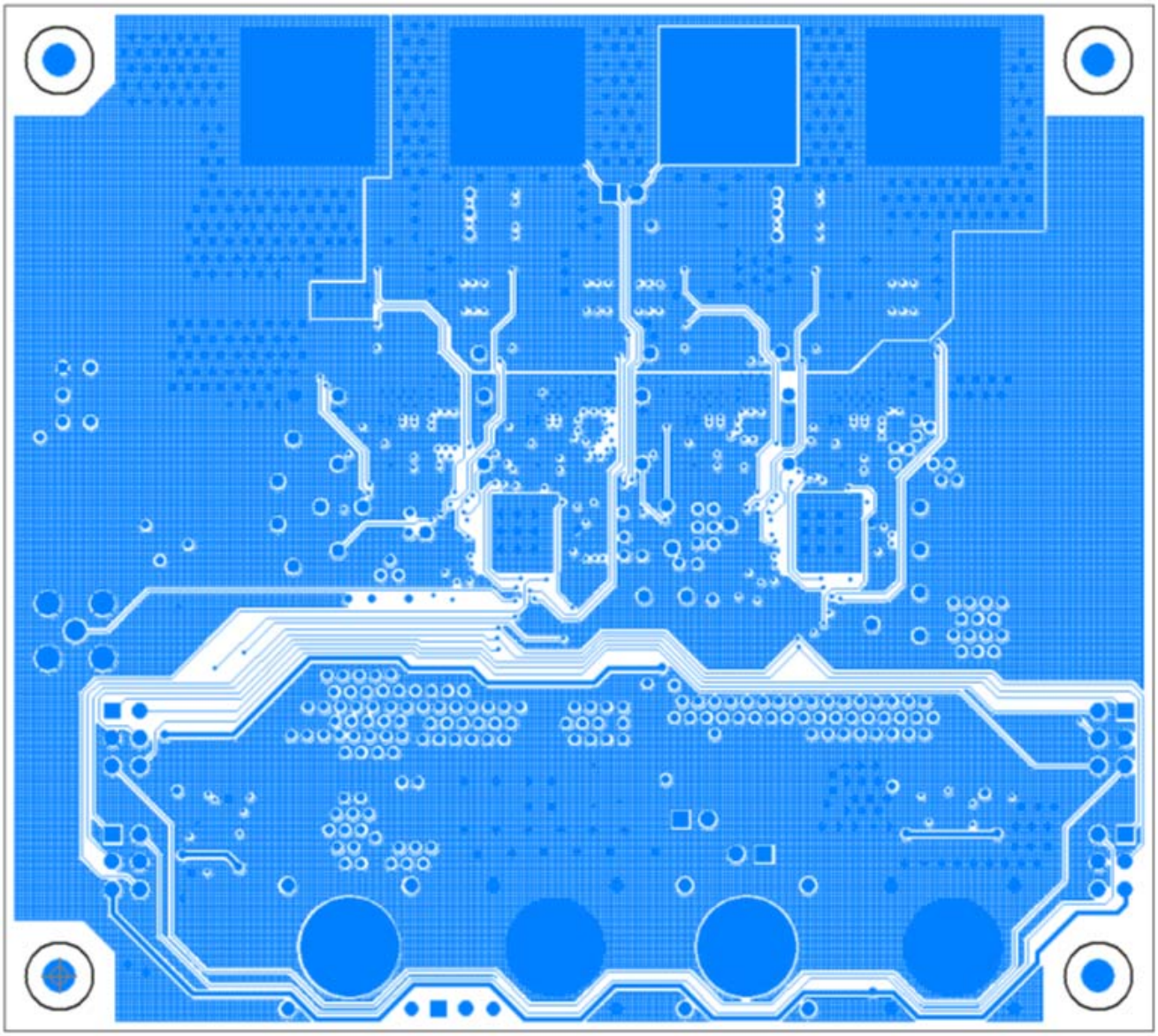

FIGURE 17. INNER 2

ZL8801-4PH-DEMO1Z Layout (Continued)

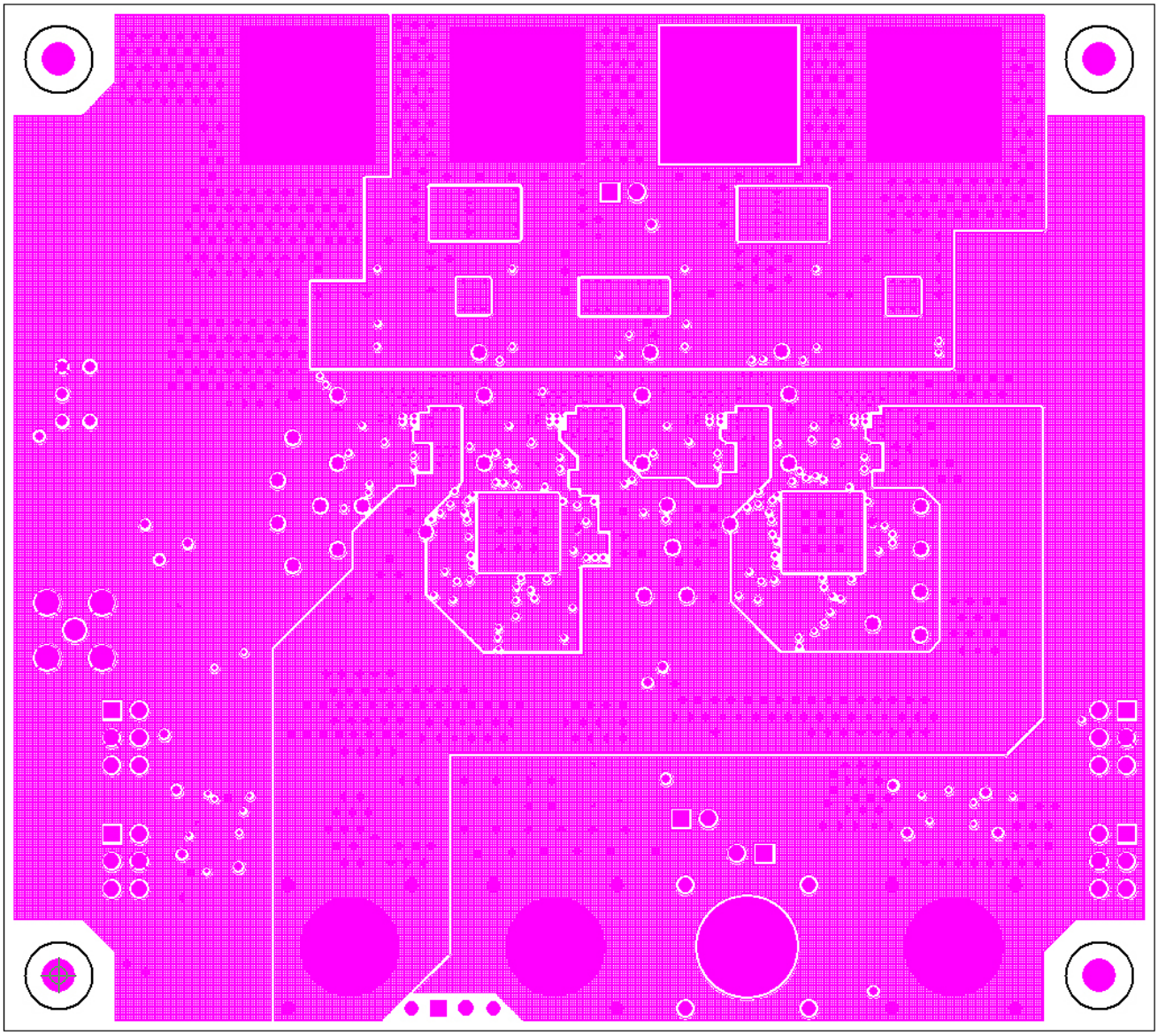

FIGURE 18. INNER 3

ZL8801-4PH-DEMO1Z Layout (Continued)

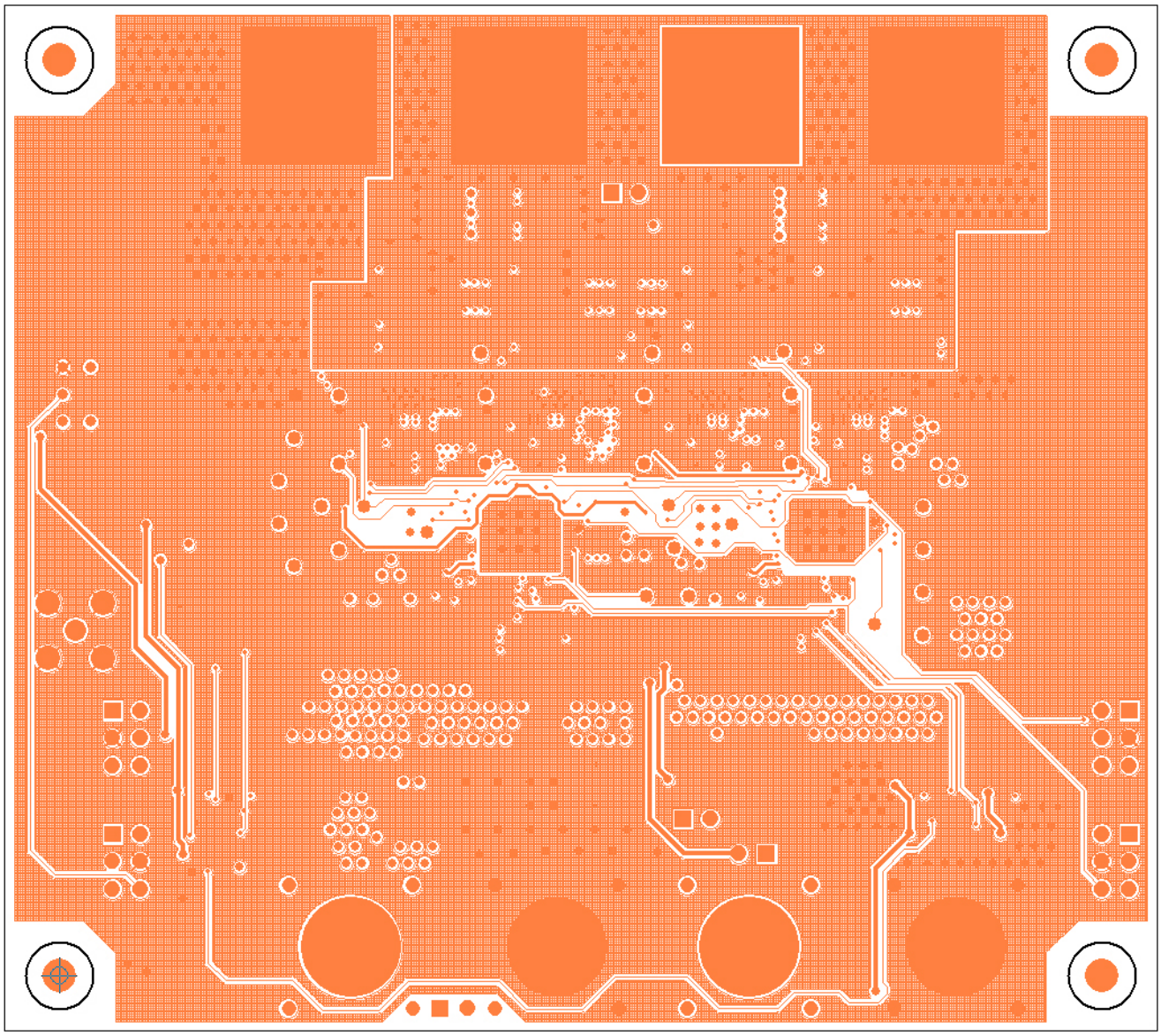

FIGURE 19. INNER 4

ZL8801-4PH-DEMO1Z Layout (Continued)

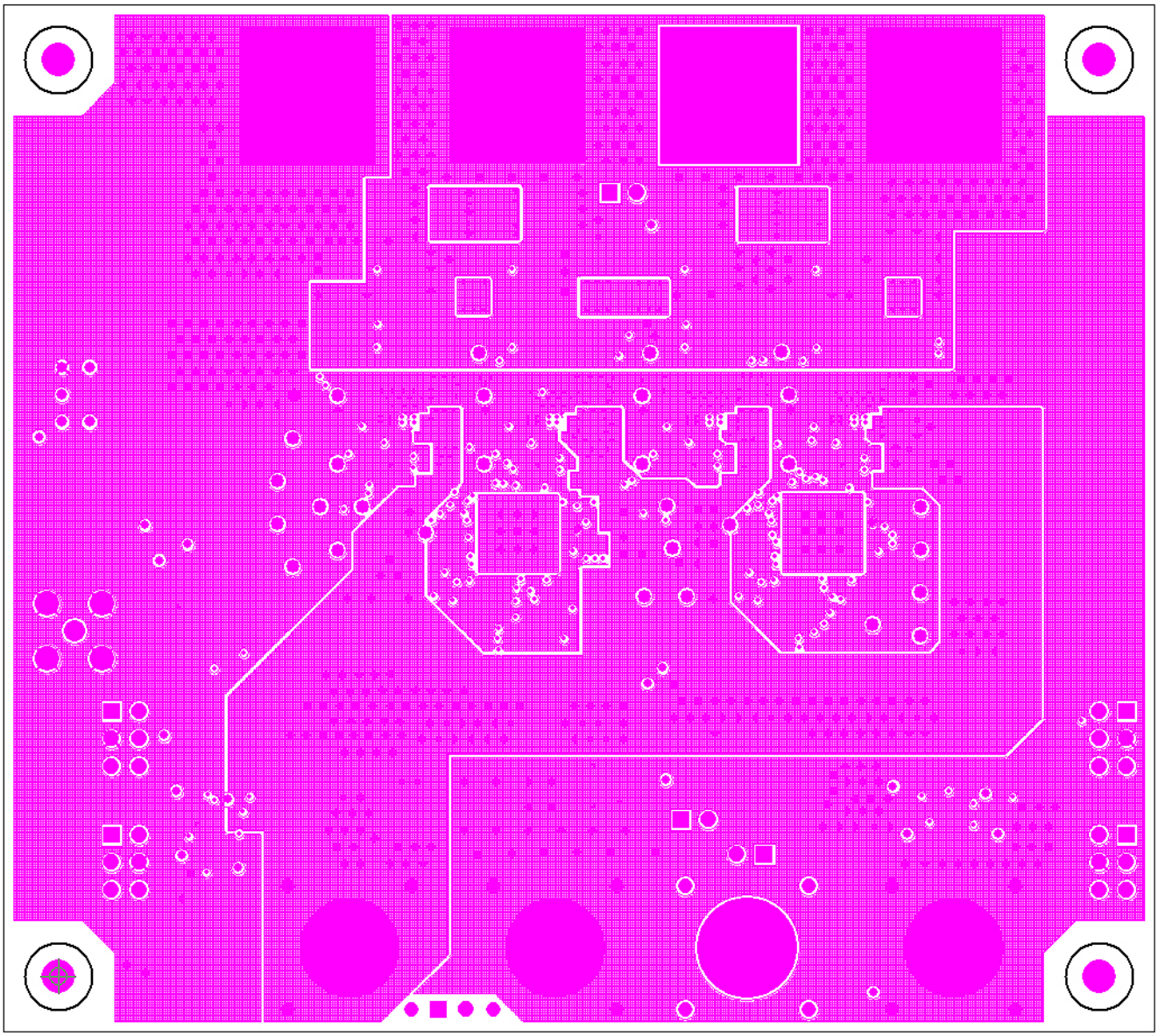

FIGURE 20. INNER 5

ZL8801-4PH-DEMO1Z Layout (Continued)

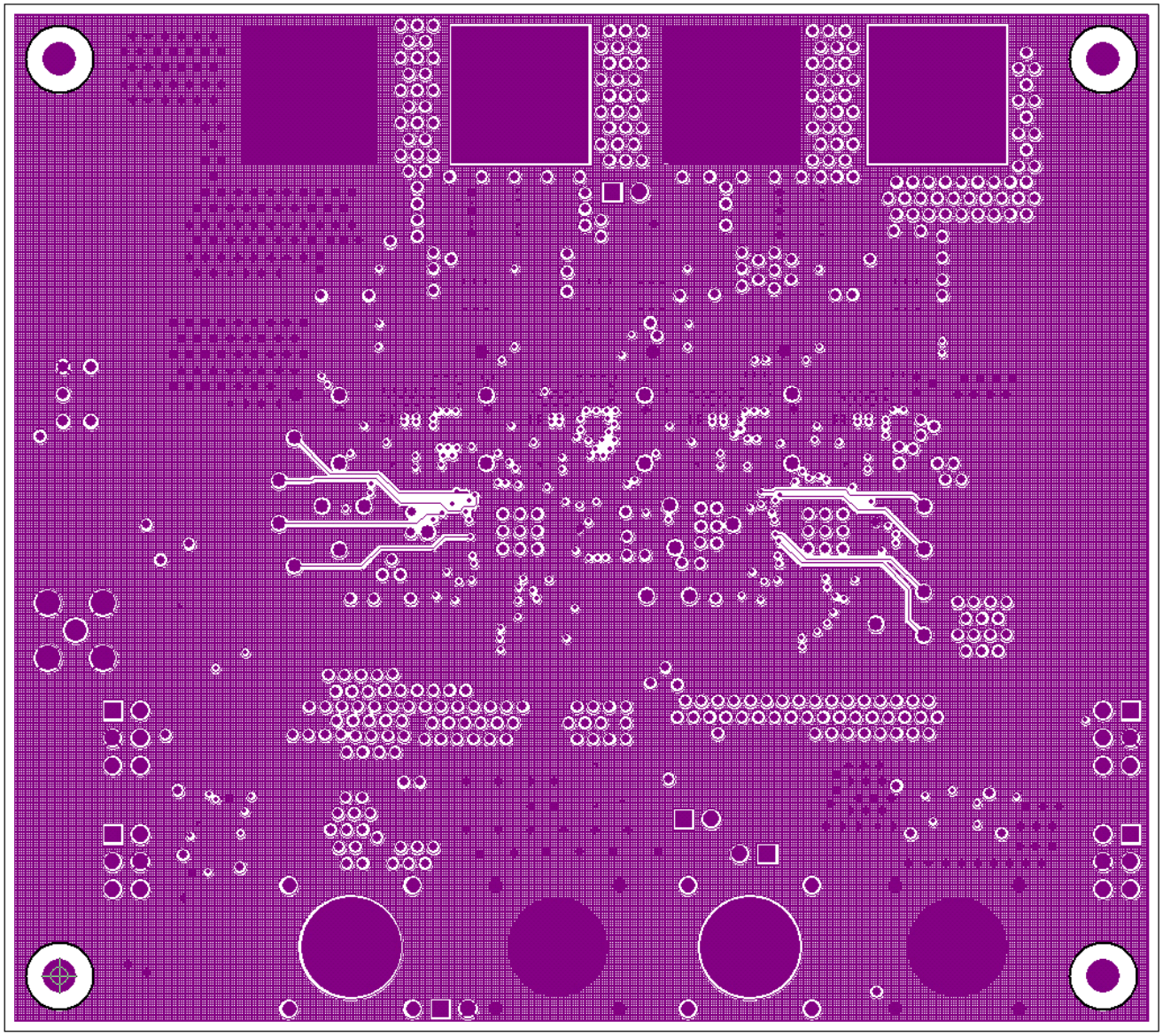

FIGURE 21. INNER 6

ZL8801-4PH-DEMO1Z Layout (Continued)

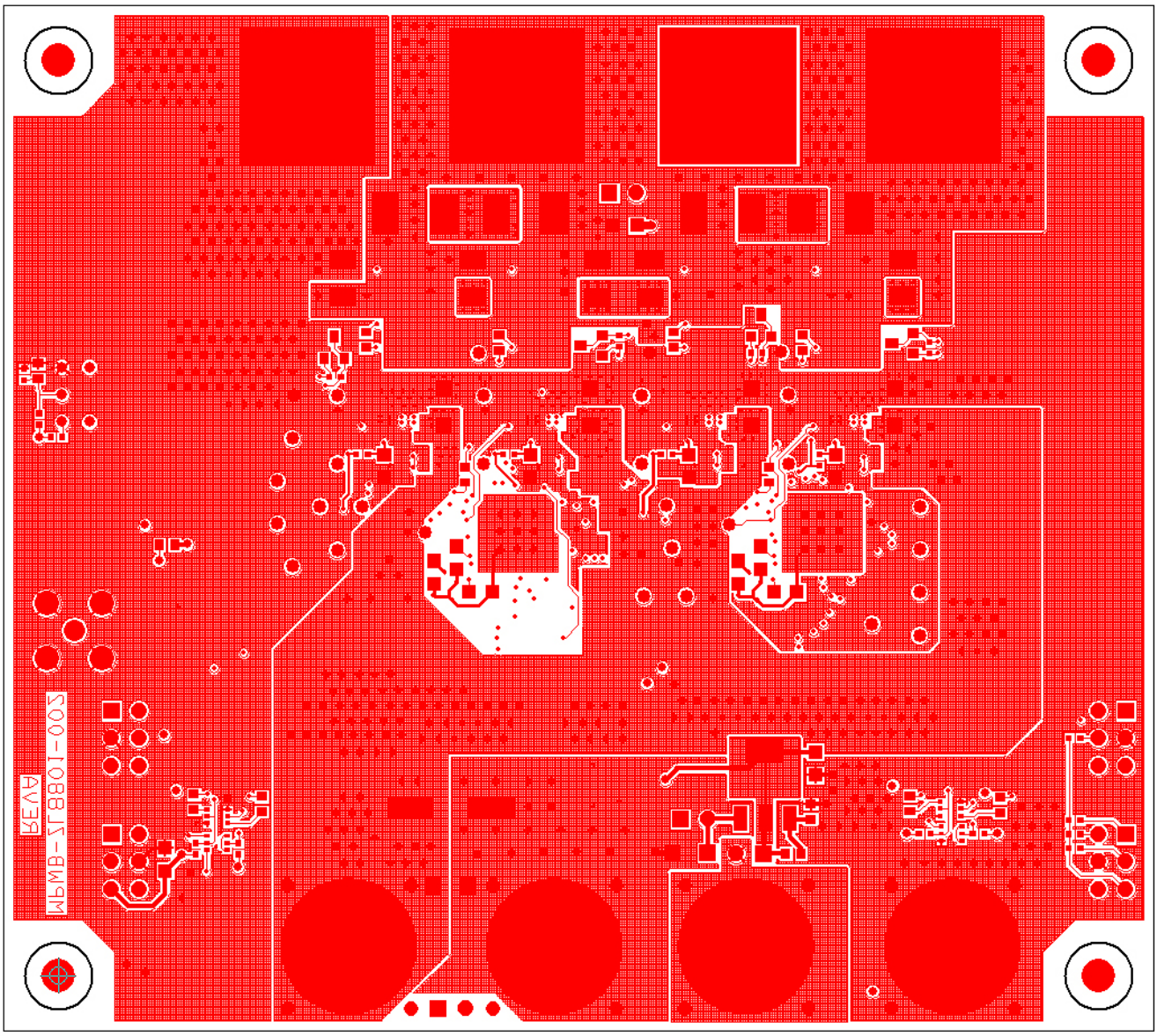

FIGURE 22. BOTTOM ETCH

ZL8801-4PH-DEMO1Z Layout (Continued)

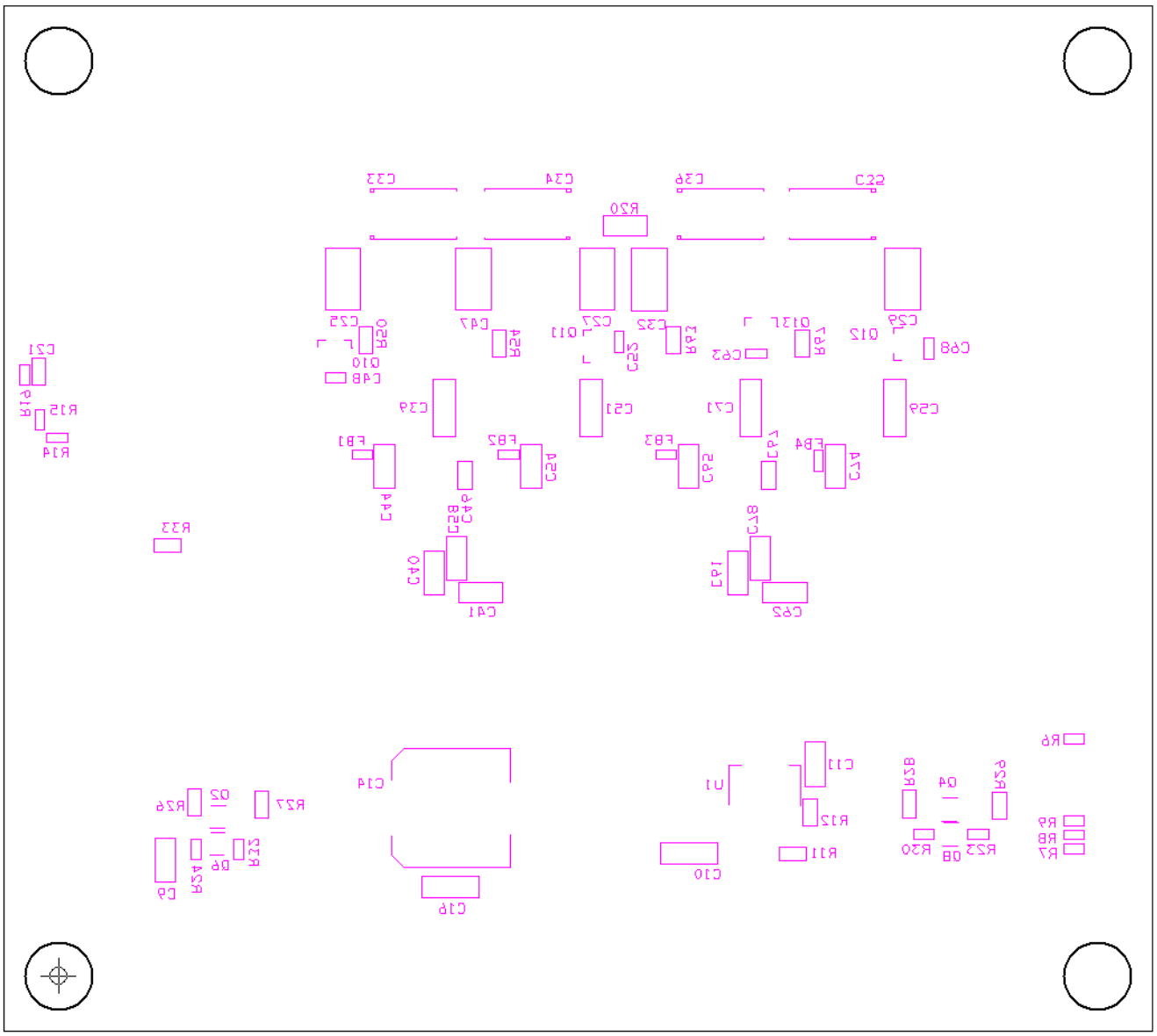

FIGURE 23. BOTTOM SILKSCREEN

Notice

1. Descriptions of circuits, software and other related information in this document are provided only to illustrate the operation of semiconductor products and application examples. You are fully responsible for the incorporation or any other use of the circuits, software, and information in the design of your product or system. Renesas Electronics disclaims any and all liability for any losses and damages incurred by you or third parties arising from the use of these circuits, software, or information.
2. Renesas Electronics hereby expressly disclaims any warranties against and liability for infringement or any other claims involving patents, copyrights, or other intellectual property rights of third parties, by or arising from the use of Renesas Electronics products or technical information described in this document, including but not limited to, the product data, drawings, charts, programs, algorithms, and application examples.
3. No license, express, implied or otherwise, is granted hereby under any patents, copyrights or other intellectual property rights of Renesas Electronics or others.
4. You shall not alter, modify, copy, or reverse engineer any Renesas Electronics product, whether in whole or in part. Renesas Electronics disclaims any and all liability for any losses or damages incurred by you or third parties arising from such alteration, modification, copying or reverse engineering.
5. Renesas Electronics products are classified according to the following two quality grades: “Standard” and “High Quality”. The intended applications for each Renesas Electronics product depends on the product’s quality grade, as indicated below.
   "Standard": Computers; office equipment; communications equipment; test and measurement equipment; audio and visual equipment; home electronic appliances; machine tools; personal electronic equipment; industrial robots; etc.
   "High Quality": Transportation equipment (automobiles, trains, ships, etc.); traffic control (traffic lights); large-scale communication equipment; key financial terminal systems; safety control equipment; etc.
   Unless expressly designated as a high reliability product or a product for harsh environments in a Renesas Electronics data sheet or other Renesas Electronics document, Renesas Electronics products are not intended or authorized for use in products or systems that may pose a direct threat to human life or bodily injury (artificial life support devices or systems; surgical implantations; etc.), or may cause serious property damage (space system; undersea repeaters; nuclear power control systems; aircraft control systems; key plant systems; military equipment; etc.). Renesas Electronics disclaims any and all liability for any damages or losses incurred by you or any third parties arising from the use of any Renesas Electronics product that is inconsistent with any Renesas Electronics data sheet, user’s manual or other Renesas Electronics document.
6. When using Renesas Electronics products, refer to the latest product information (data sheets, user’s manuals, application notes, “General Notes for Handling and Using Semiconductor Devices” in the reliability handbook, etc.), and ensure that usage conditions are within the ranges specified by Renesas Electronics with respect to maximum ratings, operating power supply voltage range, heat dissipation characteristics, installation, etc. Renesas Electronics disclaims any and all liability for any malfunctions, failure or accident arising out of the use of Renesas Electronics products outside of such specified ranges.
7. Although Renesas Electronics endeavors to improve the quality and reliability of Renesas Electronics products, semiconductor products have specific characteristics, such as the occurrence of failure at a certain rate and malfunctions under certain use conditions. Unless designated as a high reliability product or a product for harsh environments in a Renesas Electronics data sheet or other Renesas Electronics document, Renesas Electronics products are not subject to radiation resistance design. You are responsible for implementing safety measures to guard against the possibility of bodily injury, injury or damage caused by fire, and/or danger to the public in the event of a failure or malfunction of Renesas Electronics products, such as safety design for hardware and software, including but not limited to redundancy, fire control and malfunction prevention, appropriate treatment for aging degradation or any other appropriate measures. Because the evaluation of microcomputer software alone is very difficult and impractical, you are responsible for evaluating the safety of the final products or systems manufactured by you.
8. Please contact a Renesas Electronics sales office for details as to environmental matters such as the environmental compatibility of each Renesas Electronics product. You are responsible for carefully and sufficiently investigating applicable laws and regulations that regulate the inclusion or use of controlled substances, including without limitation, the EU RoHS Directive, and using Renesas Electronics products in compliance with all these applicable laws and regulations. Renesas Electronics disclaims any and all liability for damages or losses occurring as a result of your noncompliance with applicable laws and regulations.
9. Renesas Electronics products and technologies shall not be used for or incorporated into any products or systems whose manufacture, use, or sale is prohibited under any applicable domestic or foreign laws or regulations. You shall comply with any applicable export control laws and regulations promulgated and administered by the governments of any countries asserting jurisdiction over the parties or transactions.
10. It is the responsibility of the buyer or distributor of Renesas Electronics products, or any other party who distributes, disposes of, or otherwise sells or transfers the product to a third party, to notify such third party in advance of the contents and conditions set forth in this document.
11. This document shall not be reprinted, reproduced or duplicated in any form, in whole or in part, without prior written consent of Renesas Electronics.
12. Please contact a Renesas Electronics sales office if you have any questions regarding the information contained in this document or Renesas Electronics products.

(Note 1) “Renesas Electronics” as used in this document means Renesas Electronics Corporation and also includes its directly or indirectly controlled subsidiaries.

(Note 2) “Renesas Electronics product(s)” means any product developed or manufactured by or for Renesas Electronics.

(Rev.4.0-1 November 2017)

SALES OFFICES Renesas Electronics Corporation http://www.renesas.com

Refer to "http://www.renesas.com/" for the latest and detailed information.

Renesas Electronics America Inc.
1001 Murphy Ranch Road, Milpitas, CA 95035, U.S.A.
Tel: +1-408-432-8888, Fax: +1-408-434-5351

Renesas Electronics Canada Limited
9251 Yonge Street, Suite 8309 Richmond Hill, Ontario Canada L4C 9T3
Tel: +1-905-237-2004

Renesas Electronics Europe Limited
Dukes Meadow, Millboard Road, Bourne End, Buckinghamshire, SL8 5FH, U.K
Tel: +44-1628-651-700, Fax: +44-1628-651-804

Renesas Electronics Europe GmbH
Arcadiastrasse 10, 40472 Düsseldorf, Germany
Tel: +49-211-6503-0, Fax: +49-211-6503-1327

Renesas Electronics (China) Co., Ltd.
Room 1709 Quantum Plaza, No.27 ZhichunLu, Haidian District, Beijing, 100191 P. R. China
Tel: +86-10-8235-1155, Fax: +86-10-8235-7679

Renesas Electronics (Shanghai) Co., Ltd.
Unit 301, Tower A, Central Towers, 555 Langao Road, Putuo District, Shanghai, 200333 P. R. China
Tel: +86-21-2226-0888, Fax: +86-21-2226-0999

Renesas Electronics Hong Kong Limited
Unit 1601-1611, 16/F., Tower 2, Grand Century Place, 193 Prince Edward Road West, Mongkok, Kowloon, Hong Kong
Tel: +852-2265-6688, Fax: +852 2886-9022

Renesas Electronics Taiwan Co., Ltd.
13F, No. 363, Fu Shing North Road, Taipei 10543, Taiwan
Tel: +886-2-8175-9600, Fax: +886 2-8175-9670

Renesas Electronics Singapore Pte. Ltd.
80 Bendemeer Road, Unit #06-02 Hyflux Innovation Centre, Singapore 339949
Tel: +65-6213-0200, Fax: +65-6213-0300

Renesas Electronics Malaysia Sdn.Bhd.
Unit 1207, Block B, Menara Amcorp, Amcorp Trade Centre, No. 18, Jln Persiaran Barat, 46050 Petaling Jaya, Selangor Darul Ehsan, Malaysia
Tel: +60-3-7955-9390, Fax: +60-3-7955-9510

Renesas Electronics India Pvt. Ltd.
No.777C, 100 Feet Road, HAL 2nd Stage, Indiranagar, Bangalore 560 038, India
Tel: +91-80-67208700, Fax: +91-80-67208777

Renesas Electronics Korea Co., Ltd.
17F, KAMCO Yangjae Tower, 262, Gangnam-daero, Gangnam-gu, Seoul, 06265 Korea
Tel: +82-2-558-3737, Fax: +82-2-558-5338

© 2018 Renesas Electronics Corporation. All rights reserved.

Colophon 7.0