FAIRCHILD SEMICONDUCTOR™

March 1994
Revised November 1999

74ABT2240
Octal Buffer/Line Driver with 25Ω Series Resistors in the Outputs

General Description

The ABT2240 is an inverting octal buffer and line driver designed to drive the capacitive inputs of MOS memory drivers, address drivers, clock drivers, and bus-oriented transmitters/receivers.

The 25Ω series resistors in the outputs reduce ringing and eliminate the need for external resistors.

Features

- Guaranteed latchup protection
- High impedance glitch-free bus loading during entire power up and power down cycle
- Nondestructive hot insertion capability

Ordering Code:

Order Number	Package Number	Package Description
74ABT2240CSC	M20B	20-Lead Small Outline Integrated Circuit (SOIC), JEDEC MS-013, 0.300" Wide Body
74ABT2240CSJ	M20D	20-Lead Small Outline Package (SOP), EIAJ TYPE II, 5.3mm Wide
74ABT2240CMSA	MSA20	20-Lead Shrink Small Outline Package (SSOP), EIAJ TYPE II, 5.3mm Wide
74ABT2240CMTC	MTC20	20-Lead Thin Shrink Small Outline Package (TSSOP), JEDEC MO-153, 4.4mm Wide

Devices also available in Tape and Reel. Specify by appending letter suffix "X" to the ordering code.

Connection Diagram

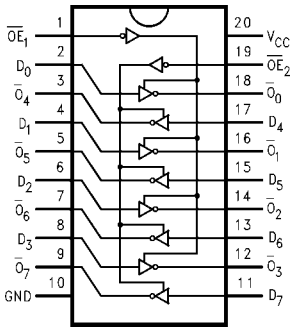

Pin Descriptions

Pin Names	Descriptions
$\overline{OE}_1$, $\overline{OE}_2$	Output Enable Input (Active LOW)
D_0–D_7	Data Inputs
$\overline{O}_0$–$\overline{O}_7$	Outputs

Schematic of Each Output

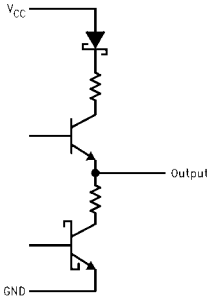

Truth Table

$\overline{OE}_1$	I_{0-3}	$\overline{O}_{0-3}$	$\overline{OE}_2$	I_{4-7}	$\overline{O}_{4-7}$
H	X	Z	H	X	Z
L	H	L	L	H	L
L	L	H	L	L	H

H = HIGH Voltage Level
L = LOW Voltage Level
X = Immaterial
Z = High Impedance

© 1999 Fairchild Semiconductor Corporation

Absolute Maximum Ratings(Note 1)

Storage Temperature	–65°C to +150°C
Ambient Temperature under Bias	–55°C to +125°C
Junction Temperature under Bias	–55°C to +150°C
V_{CC} Pin Potential to Ground Pin	–0.5V to +7.0V
Input Voltage (Note 2)	–0.5V to +7.0V
Input Current (Note 2)	–30 mA to +5.0 mA
Voltage Applied to Any Output	
in the Disabled or	
Power-off State	–0.5V to 5.5V
in the HIGH State	–0.5V to V_{CC}
Current Applied to Output	
in LOW State (Max)	twice the rated I_{OL} (mA)
DC Latchup Source Current	
(Across Comm Operating Range)	–300 mA
Over Voltage Latchup (I/O)	10V

Recommended Operating Conditions

Free Air Ambient Temperature	–40°C to +85°C
Supply Voltage	+4.5V to +5.5V
Minimum Input Edge Rate (ΔV/Δt)	
Data Input	50 mV/ns
Enable Input	20 mV/ns

Note 1: Absolute maximum ratings are values beyond which the device may be damaged or have its useful life impaired. Functional operation under these conditions is not implied.

Note 2: Either voltage limit or current limit is sufficient to protect inputs.

DC Electrical Characteristics

Symbol	Parameter		Min	Typ	Max	Units	V_{CC}	Conditions
V_{IH}	Input HIGH Voltage		2.0			V		Recognized HIGH Signal
V_{IL}	Input LOW Voltage				0.8	V		Recognized LOW Signal
V_{CD}	Input Clamp Diode Voltage				–1.2	V	Min	I_{IN} = –18 mA
V_{OH}	Output HIGH		2.5			V	Min	I_{OH} = –3 mA
	Voltage		2.0			V	Min	I_{OH} = –32 mA
V_{OL}	Output LOW Voltage				0.8	V	Min	I_{OL} = 15 mA
I_{IH}	Input HIGH Current				1 1	μA	Max	V_{IN} = 2.7V (Note 3) V_{IN} = V_{CC}
I_{BVI}	Input HIGH Current Breakdown Test				7	μA	Max	V_{IN} = 7.0V
I_{IL}	Input LOW Current				–1 –1	μA	Max	V_{IN} = 0.5V (Note 3) V_{IN} = 0.0V
V_{ID}	Input Leakage Test					V	0.0	I_{ID} = 1.9 μA All Other Pins Grounded
I_{OZH}	Output Leakage Current				10	μA	0 – 5.5V	V_{OUT} = 2.7V; $\overline{OE}$n = 2.0V
I_{OZL}	Output Leakage Current				–10	μA	0 – 5.5V	V_{OUT} = 0.5V; $\overline{OE}$n = 2.0V
I_{OS}	Output Short-Circuit Current				–275	mA	Max	V_{OUT} = 0.0V
I_{CEX}	Output HIGH Leakage Current				50	μA	Max	V_{OUT} = V_{CC}
I_{ZZ}	Bus Drainage Test				100	μA	0.0	V_{OUT} = 5.5V; All Others GND
I_{CCH}	Power Supply Current				50	μA	Max	All Outputs HIGH
I_{CCL}	Power Supply Current				30	mA	Max	All Outputs LOW
I_{CCZ}	Power Supply Current				50	μA	Max	$\overline{OE}$n = V_{CC} All Others at V_{CC} or GND
I_{CCT}	Additional	Outputs Enabled			1.5	mA	Max	V_I = V_{CC} – 2.1V
	I_{CC}/Input	Outputs 3-STATE			1.5	mA		Enable Input V_I = V_{CC} – 2.1V
		Outputs 3-STATE			50	μA		Data Input V_I = V_{CC} – 2.1V All Others at V_{CC} or GND
I_{CCD}	Dynamic I_{CC}	No Load				mA/	Max	Outputs OPEN
	(Note 3)				0.1	MHz		$\overline{OE}$n = GND (Note 4) One Bit Toggling, 50% Duty Cycle

Note 3: Guaranteed, but not tested.

Note 4: For 8 bits toggling, I_{CCD} < 0.8 mA/MHz.

AC Electrical Characteristics

Symbol	Parameter	$T_A = +25°C$, $V_{CC} = +5V$, $C_L = 50$ pF			$T_A = -40°C$ to $+85°C$, $V_{CC} = 4.5V–5.5V$, $C_L = 50$ pF		Units
		Min	Typ	Max	Min	Max	
t_{PLH}	Propagation	1.0		4.9	1.0	4.9	ns
t_{PHL}	Delay Data to Outputs	1.5		5.3	1.5	5.3	
t_{PZH}	Output Enable	1.5		6.6	1.5	6.6	ns
t_{PZL}	Time	2.7		6.9	2.7	6.9	
t_{PHZ}	Output Disable	1.9		6.4	1.9	6.4	ns
t_{PLZ}	Time	1.9		6.4	1.9	6.4	

Capacitance

Symbol	Parameter	Typ	Units	Conditions $T_A = 25°C$
C_{IN}	Input Capacitance	5.0	pF	$V_{CC} = 0V$
C_{OUT} (Note 5)	Output Capacitance	9.0	pF	$V_{CC} = 5.0V$

Note 5: C_{OUT} is measured at frequency f = 1 MHz, per MIL-STD-883, Method 3012.

AC Loading

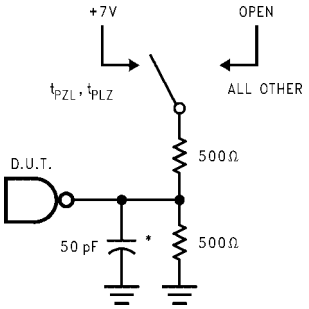

*Includes jig and probe capacitance

FIGURE 1. Standard AC Test Load

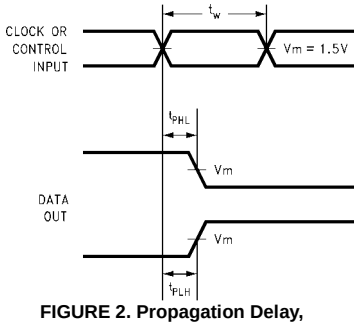

FIGURE 2. Propagation Delay, Pulse Width Waveforms

Amplitude	Rep. Rate	t_W	t_r	t_f
3.0V	1 MHz	500 ns	2.5 ns	2.5 ns

FIGURE 3. Test Input Signal Requirements

AC Waveforms

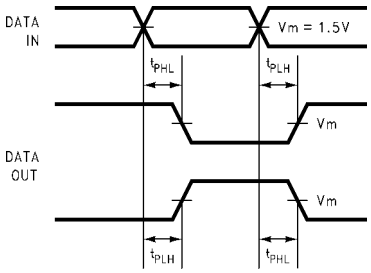

FIGURE 4. Propagation Delay Waveforms for Inverting and Non-Inverting Functions

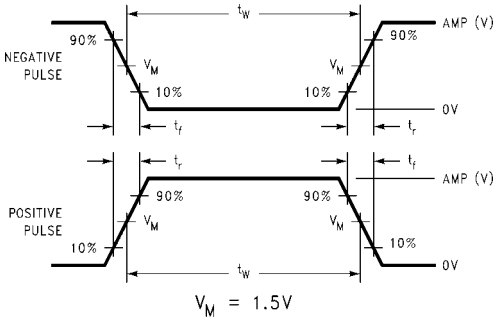

FIGURE 6. Test Input Signal Levels

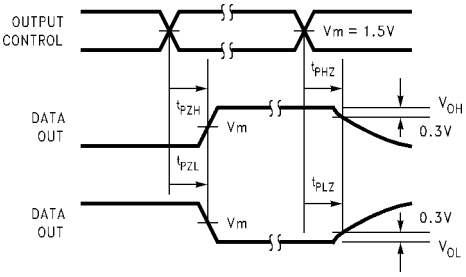

FIGURE 5. 3-STATE Output HIGH and LOW Enable and Disable Times

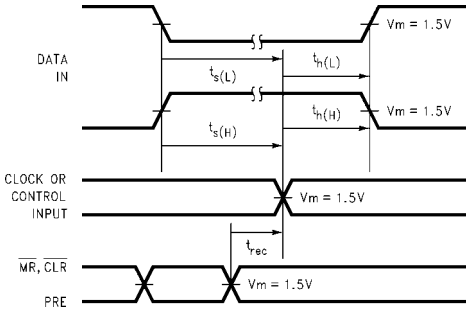

FIGURE 7. Setup Time, Hold Time and Recovery Time Waveforms

Physical Dimensions inches (millimeters) unless otherwise noted

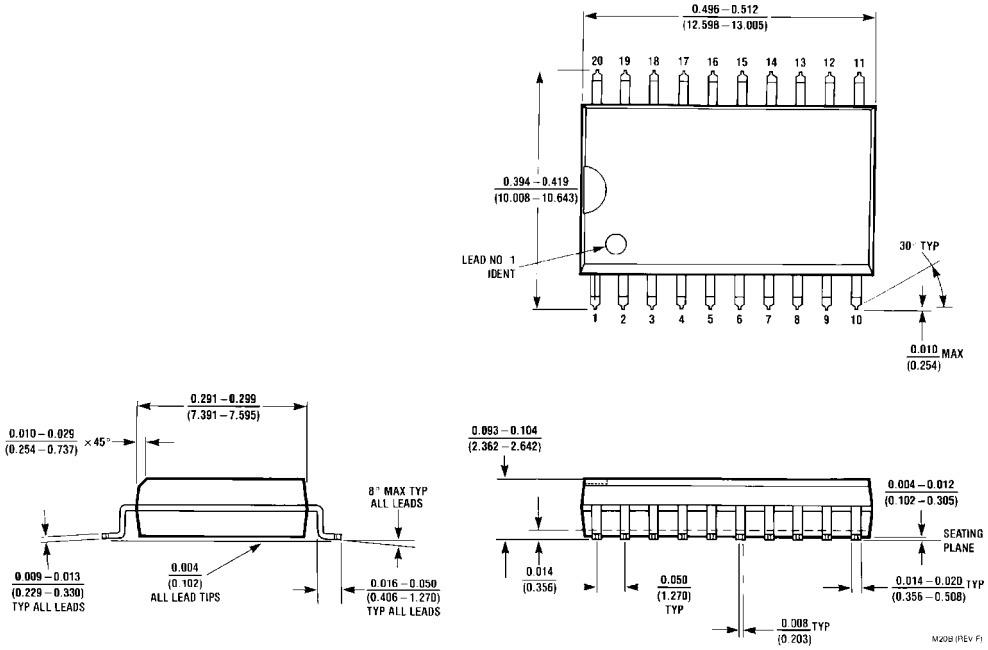

20-Lead Small Outline Integrated Circuit (SOIC), JEDEC MS-013, 0.300" Wide Body
Package Number M20B

Physical Dimensions inches (millimeters) unless otherwise noted (Continued)

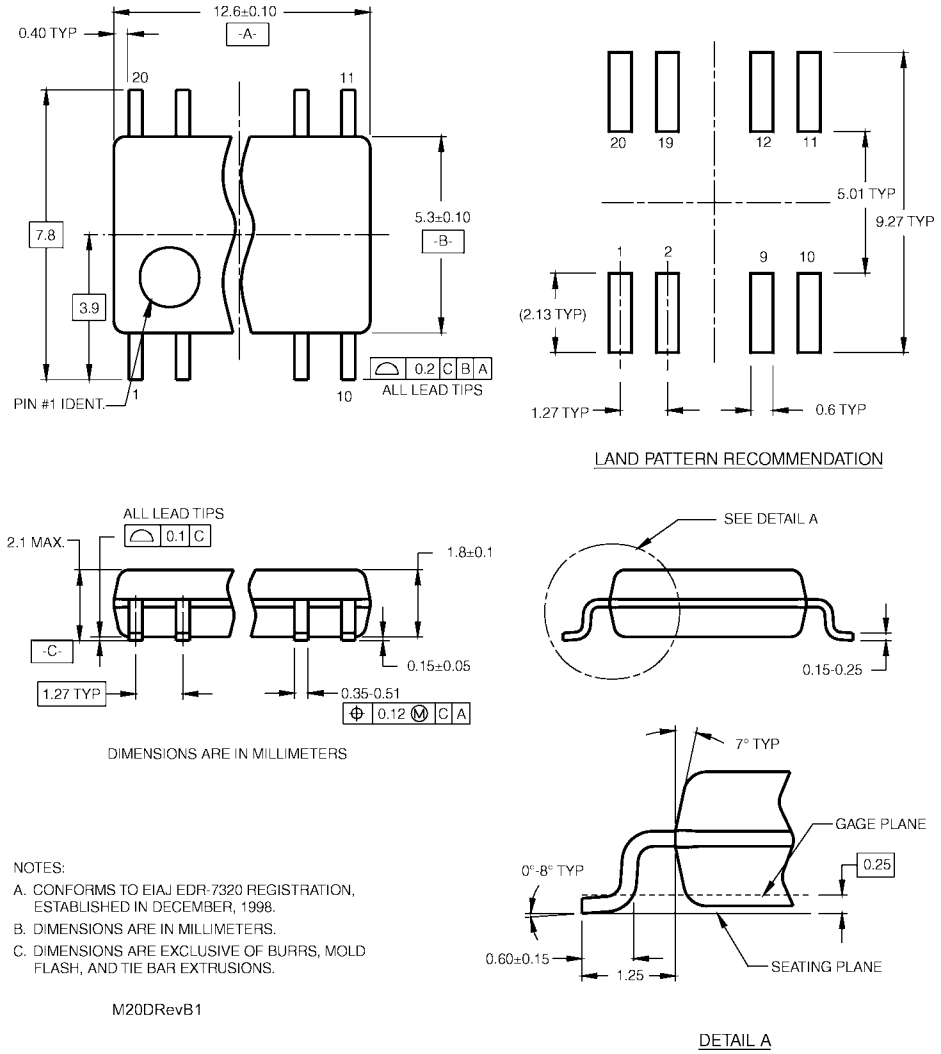

NOTES:

A. CONFORMS TO EIAJ EDR-7320 REGISTRATION, ESTABLISHED IN DECEMBER, 1998.

B. DIMENSIONS ARE IN MILLIMETERS.

C. DIMENSIONS ARE EXCLUSIVE OF BURRS, MOLD FLASH, AND TIE BAR EXTRUSIONS.

M20DRevB1

20-Lead Small Outline Package (SOP), EIAJ TYPE II, 5.3mm Wide
Package Number M20D

Physical Dimensions inches (millimeters) unless otherwise noted (Continued)

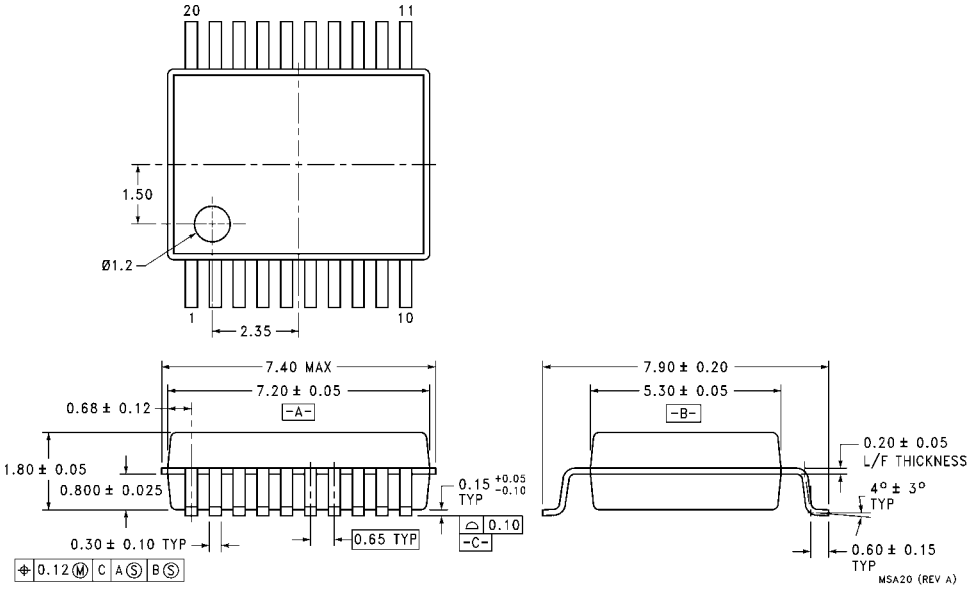

20-Lead Shrink Small Outline Package (SSOP), EIAJ TYPE II, 5.3mm Wide
Package Number MSA20

Physical Dimensions inches (millimeters) unless otherwise noted (Continued)

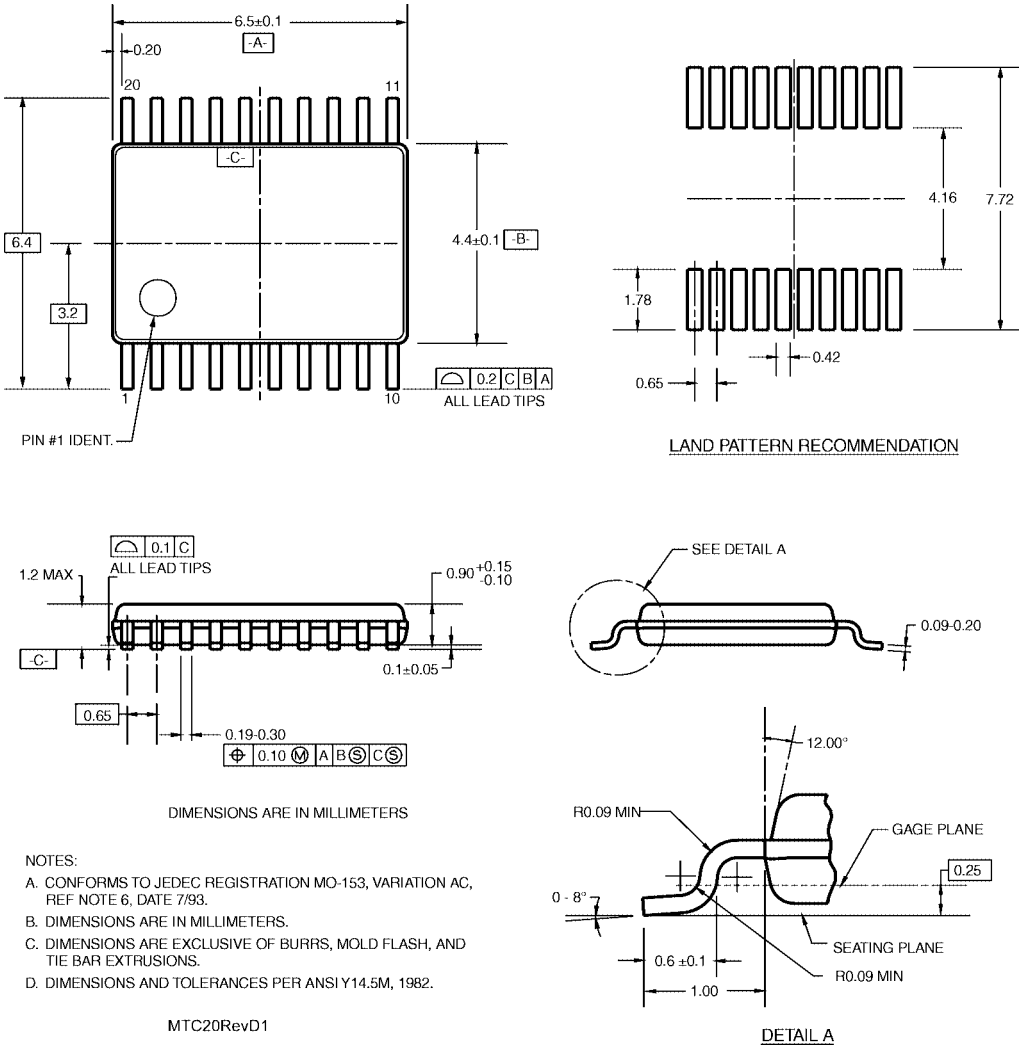

NOTES:

A. CONFORMS TO JEDEC REGISTRATION MO-153, VARIATION AC, REF NOTE 6, DATE 7/93.

B. DIMENSIONS ARE IN MILLIMETERS.

C. DIMENSIONS ARE EXCLUSIVE OF BURRS, MOLD FLASH, AND TIE BAR EXTRUSIONS.

D. DIMENSIONS AND TOLERANCES PER ANSI Y14.5M, 1982.

MTC20RevD1

20-Lead Thin Shrink Small Outline Package (TSSOP), JEDEC MO-153, 4.4mm Wide
Package Number MTC20

Fairchild does not assume any responsibility for use of any circuitry described, no circuit patent licenses are implied and Fairchild reserves the right at any time without notice to change said circuitry and specifications.

LIFE SUPPORT POLICY

FAIRCHILD'S PRODUCTS ARE NOT AUTHORIZED FOR USE AS CRITICAL COMPONENTS IN LIFE SUPPORT DEVICES OR SYSTEMS WITHOUT THE EXPRESS WRITTEN APPROVAL OF THE PRESIDENT OF FAIRCHILD SEMICONDUCTOR CORPORATION. As used herein:

1. Life support devices or systems are devices or systems which, (a) are intended for surgical implant into the body, or (b) support or sustain life, and (c) whose failure to perform when properly used in accordance with instructions for use provided in the labeling, can be reasonably expected to result in a significant injury to the user.
2. A critical component in any component of a life support device or system whose failure to perform can be reasonably expected to cause the failure of the life support device or system, or to affect its safety or effectiveness.

www.fairchildsemi.com