samtec

SEARRAY™ OPEN PIN FIELD INTERCONNECTS

(1,27mm) .050"

SEAF SERIES

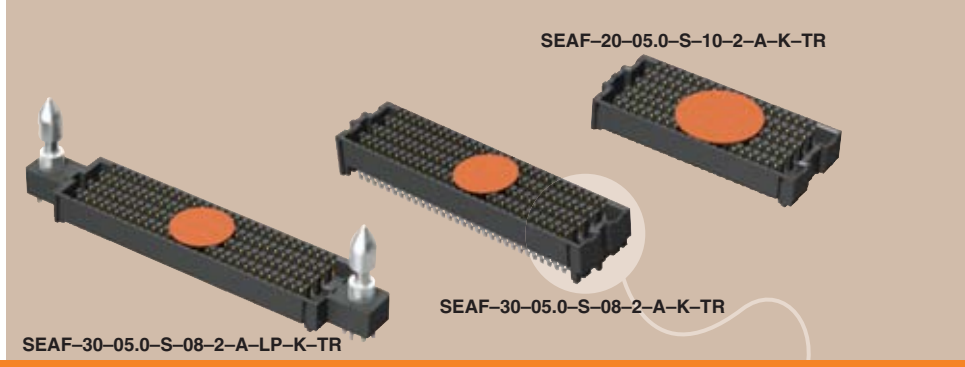

HIGH SPEED/HIGH DENSITY OPEN PIN FIELD

SPECIFICATIONS

For complete specifications and recommended PCB layouts see www.samtec.com?SEAF

Insulator Material: Black LCP
Contact Material: Copper Alloy
Solder Charge: 95.5% Sn, 3.8% Ag, 0.7% Cu (Tin/Lead also available. Call Samtec.)
Operating Temp Range: -55°C to +125°C
Plating: Au or Sn over 50µ" (1,27µm) Ni
Contact Resistance: 5.5 mΩ
Working Voltage: 240 VAC
RoHS Compliant: Yes
Lead-Free Solderable: Yes

FILE NO. E111594

Mates with: SEAM, SEAMP, SEAR, SEAMI, SEAC (Requires –LP)

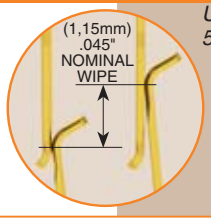

E.L.P.™ EXTENDED LIFE PRODUCT
10 year Mixed Flowing Gas with 30µ" Gold
Call Samtec for maximum cycles mated with SEAM

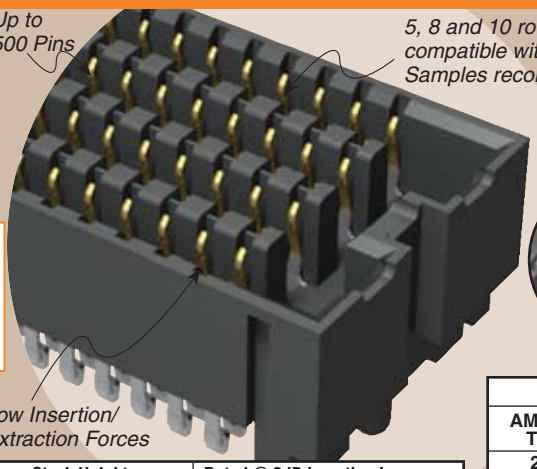

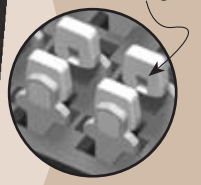

Final Inch® Break Out Region Performance Certified finalinch.com

7mm Stack Height	Rated @ 3dB Insertion Loss
Single-Ended Signaling	9.5 GHz / 19 Gbps
Differential Pair Signaling	10.5 GHz / 21 Gbps

Performance data for other stack heights and complete test data available at www.samtec.com?SEAF or contact sig@samtec.com

CURRENT RATING	
AMBIENT TEMP	SEAM/SEAF
20°C	2.3A
40°C	2A
60°C	1.75A
95°C	1.14A
30 ADJACENT POSITIONS POWERED	

Industry Standards
PISMO 2
VITA 47
VITA 57
Protocols Supported
Fibre Channel
Rapid I/O
PCI Express®
SATA
Infiniband
Download app notes at www.samtec.com/appnote
Contact SIG @ samtec.com for questions on protocols

SEAF – NO. PINS PER ROW – LEAD STYLE – PLATING OPTION – NO. OF ROWS – 2 – A – OPTION – K – TR

–10, –15, –20, –30, –40, –50
(–10 only available in 04 row)
(–15 only available in 10 row)

Specify LEAD STYLE from chart

LEAD STYLE	A
–05.0	(5,05) .199
–06.0	(6,05) .238
–06.5	(6,55) .258
–07.5 (30x4 only)	(7,54) .297

–L = 10µ" (0,25µm) Gold on contact area, Matte Tin on solder tail

–S = 30µ" (0,76µm) Gold on contact area, Matte Tin on solder tail

–04 = Four Rows
–05 = Five Rows
–06 = Six Rows
–08 = Eight Rows
–10 = Ten Rows

NO. OF ROWS	B
–04	(5,61) .221
–05, –06	(8,20) .323
–08	(10,69) .421
–10	(13,23) .521

–2 = Lead-Free Solder Charge

–LP = Latch Post (–LP required for SEAC mate only) (Available with –05.0 lead style and –04,–05, –08 & –10 rows only)

DIFFERENTIAL

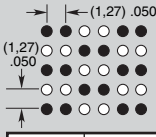

ARRAY	PAIR COUNT
50x10	125
50x8	100
40x10	100

ARRAY	PAIR COUNT
40x8	80
40x6	60
30x10	75
30x8	60
30x6	45
20x10	50
20x8	40
20x5	25

Note: Some sizes, styles and options are non-standard, non-returnable.

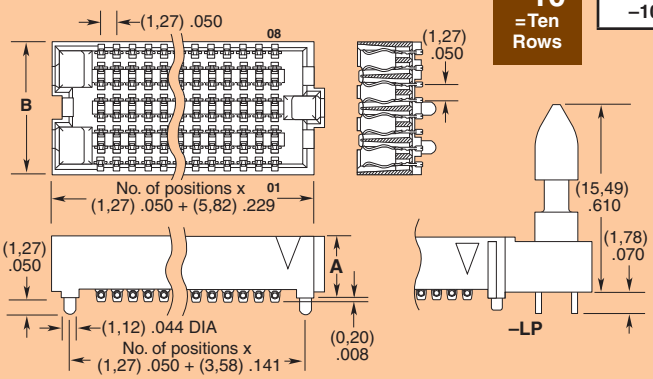

MATED HEIGHTS				
SEAM LEAD STYLE	SEAF LEAD STYLE			
	–05.0	–06.0	–06.5	–07.5
–02.0	7mm	8mm	8.5mm	9.5mm
–03.0	8mm	9mm	9.5mm	10.5mm
–03.5	8.5mm	9.5mm	10mm	11mm
–06.5	11.5mm	12.5mm	13mm	14mm
–07.0	12mm	13mm	13.5mm	14.5mm
–09.0	14mm	15mm	15.5mm	16.5mm
–11.0	16mm	17mm	17.5mm	18.5mm

Due to technical progress, all designs, specifications and components are subject to change without notice.

SAMTEC USA • Tel: 1-800-SAMTEC-9 or 812-944-6733 **SAMTEC SILICON VALLEY** • Tel: 408-395-5900 **SAMTEC SOUTHERN CALIFORNIA** • Tel: 1-800-726-8329
SAMTEC AMERICA LATINA COMERCIO EXTERIOR LTDA • Tel: (+55 31) 3786 3227 **SAMTEC UNITED KINGDOM** • Tel: 44 01236 739292 **SAMTEC GERMANY** • Tel: +49 (0) 89 / 89460-0
SAMTEC FRANCE • Tel: 33 01 60 95 06 60 **SAMTEC ITALY** • Tel: 39 039 6890337 **SAMTEC NORDIC/BALTIC** • Tel: +46-84477280 **SAMTEC BENELUX** • Tel: 44 01236 739292
SAMTEC ISRAEL • Tel: 972-3-7526600 **SAMTEC INDIA** • Tel: +91-80-3272 1612 **SAMTEC ASIA PACIFIC** • Tel: 65 6745-5955 **SAMTEC JAPAN** • Tel: 045-475-1385 **SAMTEC CHINA** • Tel: 86-21-6083 3766
SAMTEC TAIWAN • Tel: 886-2-2735-6109 **SAMTEC HONG KONG** • Tel: 852-26904858 **SAMTEC KOREA** • Tel: 82-31-717-5685 **SAMTEC ANZ** • Tel: 613 9580 0683