NO.	REVISION	DATE
A	Adjust connector geometry to std.	11/01

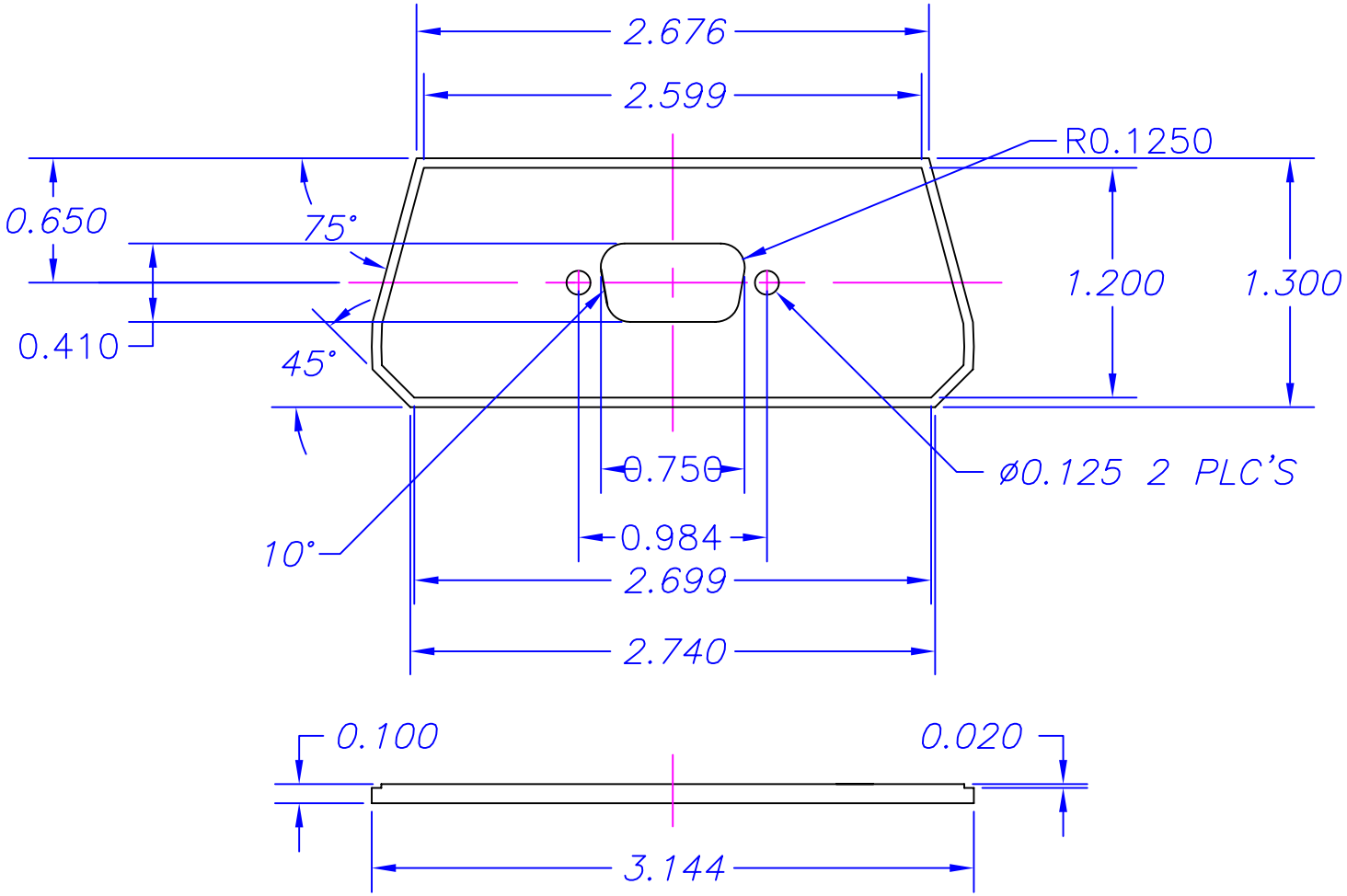

TITLE A–27 END PANEL DB–9				DES. F. VALENCIA	11/01	P/N 2010,DB9
TOLERANCE			MAT'L	DRWN.		SERPAC
DECIMAL	FRAC.	ANG.	SHEET NO. 1 / SCALE 1=1	CKD. D.J.	11/01	
.XX ±.010 / .XXX ±.005	±1/64	±1/2°	NO. OF SHTS. 1 / DWG NO. A–27DB9	APPR.		612 COMMERCIAL AVE., COVINA, CA. 91723 (818) 331–0517 FAX: (818) 331–8584