74LCX125

Low voltage CMOS quad bus buffer (3-State) with 5V tolerant inputs and outputs

Features

- 5V tolerant inputs and outputs
- High speed:
  - t_{PD} = 5.2ns (Max) at V_{CC} = 3V
- Power down protection on inputs and outputs
- Symmetrical output impedance:
  - $|I_{OH}| = I_{OL}$ = 24mA (Min) at V_{CC} = 3V
- PCI bus levels guaranteed at 24mA
- Balanced propagation delays:
  - $t_{PLH} \cong t_{PHL}$
- Operating voltage range:
  - V_{CC} (Opr) = 2.0V to 3.6V
- Pin and function compatible with 74 series 125
- Latch-up performance exceeds 500mA (JESD 17)
- ESD performance:
  - HBM > 2000V (MIL STD 883 method 3015); MM > 200V

SO-14 TSSOP14

Description

The 74LCX125 is a low voltage CMOS quad bus buffer fabricated with sub-micron silicon gate and double-layer metal wiring C^2MOS technology. It is ideal for low power and high speed 3.3V applications; it can be interfaced to 5V signal environment for both inputs and outputs.

The device requires the 3-STATE control input $\overline{G}$ to be set high to place the output in to the high impedance state.

It has same speed performance at 3.3V than 5V AC/ACT family, combined with a lower power consumption.

All inputs and outputs are equipped with protection circuits against static discharge, giving them 2KV ESD immunity and transient excess voltage.

Order codes

Part number	Package	Packaging
74LCX125MTR	SO-14	Tape and reel
74LCX125TTR	TSSOP14	Tape and reel

Contents

1 Logic symbols and I/O equivalent circuit 3

2 Pin settings 4

2.1 Pin connection 4

2.2 Pin description 4

2.3 Truth table 4

3 Maximum rating 5

3.1 Recommended operating conditions 5

4 Electrical characteristics 6

5 Test circuit 8

6 Waveforms 9

7 Package mechanical data 10

8 Revision history 15

1 Logic symbols and I/O equivalent circuit

Figure 1. IEC logic symbols

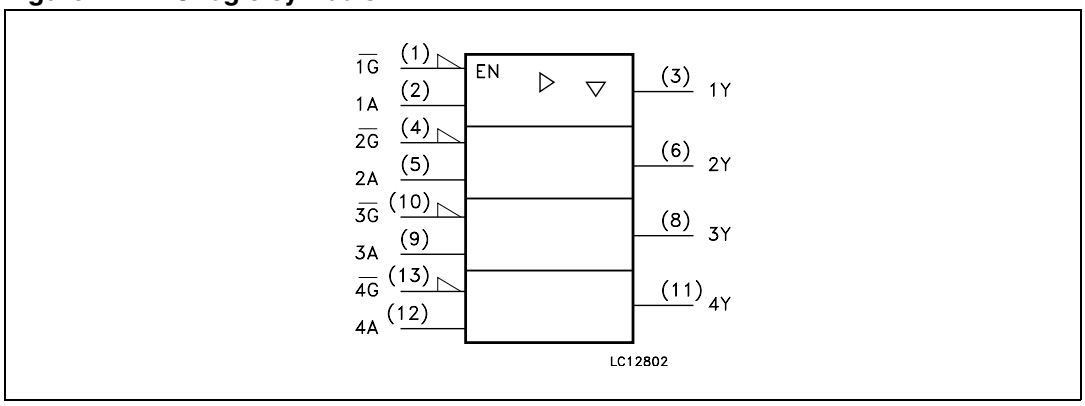

Figure 2. Input and output equivalent circuit

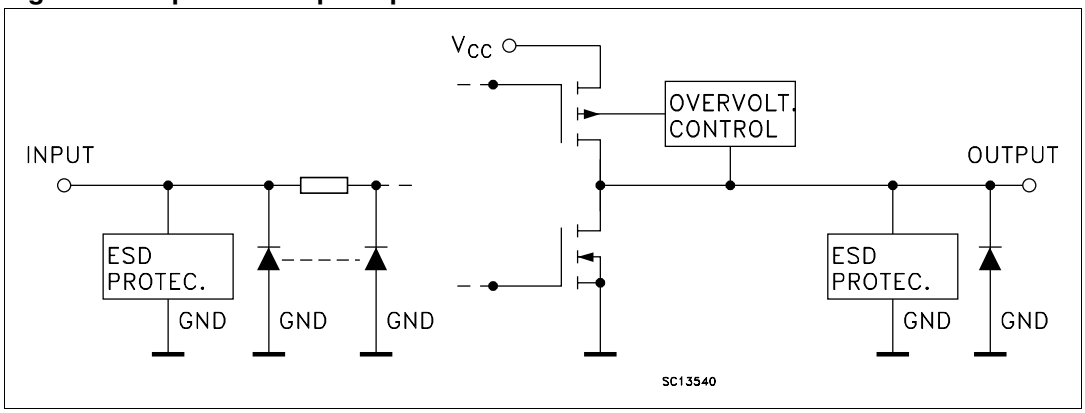

2 Pin settings

2.1 Pin connection

Figure 3. Pin connection (top through view)

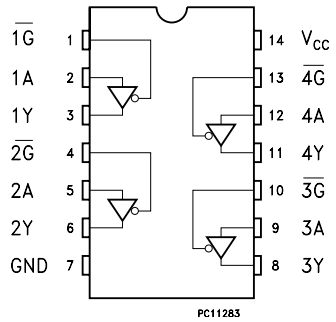

2.2 Pin description

Table 1. Pin description

Pin N°	Symbol	Name and function
1, 4, 10, 13	$1\overline{G}$ TO $4\overline{G}$	Output enable input
2, 5, 9, 12	1A TO 4A	Data inputs
3, 6, 8, 11	1Y TO 4Y	Data outputs
7	GND	Ground (0V)
14	V_{CC}	Positive supply voltage

2.3 Truth table

Table 2. Truth table

Inputs		Outputs
A	**$\overline{G}$**	**Y**
X (1)	H	Z (2)
L	L	L
H	L	H

1. Do not care
2. High impedance

3 Maximum rating

stressing the device above the rating listed in the “absolute maximum ratings” table may cause permanent damage to the device. these are stress ratings only and operation of the device at these or any other conditions above those indicated in the operating sections of this specification is not implied. exposure to absolute maximum rating conditions for extended periods may affect device reliability. refer also to the STMicroelectronics sure program and other relevant quality documents.

Table 3. Absolute maximum ratings

Symbol	Parameter	Value	Unit
V_{CC}	Supply voltage	-0.5 to +7.0	V
V_I	DC input voltage	-0.5 to +7.0	V
V_O	DC output voltage (V_{CC} = 0V)	-0.5 to +7.0	V
V_O	DC output voltage (high or low state) (1)	-0.5 to V_{CC} + 0.5	V
I_{IK}	DC input diode current	-50	mA
I_{OK}	DC output diode current (2)	-50	mA
I_O	DC output current	±50	mA
I_{CC}	DC supply current per supply pin	±100	mA
I_{GND}	DC ground current per supply pin	±100	mA
T_{stg}	Storage temperature	-65 to +150	°C
T_L	Lead temperature (10 sec)	300	°C

1. I_O absolute maximum rating must be observed
2. V_O < GND

3.1 Recommended operating conditions

Table 4. Recommended operating conditions

Symbol	Parameter	Value	Unit
V_{CC}	Supply voltage (1)	2.0 to 3.6	V
V_I	Input voltage	0 to 5.5	V
V_O	Output voltage (V_{CC} = 0V)	0 to 5.5	V
V_O	Output voltage (high or low state)	0 to V_{CC}	V
I_{OH}, I_{OL}	High or low level output current (V_{CC} = 3.0 to 3.6V)	±24	mA
I_{OH}, I_{OL}	High or low level output current (V_{CC} = 2.7V)	±12	mA
T_{op}	Operating temperature	-40 to 85	°C
dt/dv	Input Rise and Fall Time (2)	0 to 10	ns/V

1. Truth table guaranteed: 1.5V to 3.6V
2. V_{IN} from 0.8V to 2V at V_{CC} = 3.0V

4 Electrical characteristics

Table 5. DC specifications

Symbol	Parameter	Test condition		Value		Unit
		V_{CC} (V)		-40 to 85°C		
				Min	Max	
V_{IH}	High level input voltage	2.7 to 3.6		2.0		V
V_{IL}	Low level input voltage				0.8	V
V_{OH}	High level output voltage	2.7 to 3.6	I_O=-100 µA	V_{CC}-0.2		V
		2.7	I_O=-12 mA	2.2		
		3.0	I_O=-18 mA	2.4		
			I_O=-24 mA	2.2		
V_{OL}	Low level output voltage	2.7 to 3.6	I_O=100 µA		0.2	V
		2.7	I_O=12 mA		0.4	
		3.0	I_O=16 mA		0.4	
			I_O=24 mA		0.55	
I_I	Input leakage current	2.7 to 3.6	V_I = 0 to 5.5V		±5	µA
I_{off}	Power OFF leakage current	0	V_I or V_O = 5.5V		10	µA
I_{OZ}	High Impedance Output Leakage Current	2.7 to 3.6	V_I = V_{IH} or V_{IL} V_O = 0 to V_{CC}		±5	µA
I_{CC}	Quiescent supply current	2.7 to 3.6	V_I = V_{CC} or GND		10	µA
			V_I or V_O= 3.6 to 5.5V		±10	
ΔI_{CC}	I incr. per Input	2.7 to 3.6	V_{IH} = V_{CC} - 0.6V		500	µA

Table 6. Dynamic switching characteristics

Symbol	Parameter	Test condition		Value			Unit
		V_{CC} (V)		T_A = 25 °C			
				Min	Typ	Max	
V_{OLP}	Dynamic low level quiet output (1)	3.3	C_L = 50pF V_{IL} = 0V, V_{IH} = 3.3V		0.8		V
V_{OLV}					-0.8		

1. Number of outputs defined as "n". Measured with "n-1" outputs switching from HIGH to LOW or LOW to HIGH. The remaining output is measured in the LOW state.

Table 7. AC electrical characteristics

Symbol	Parameter	Test condition				Value		Unit
		V_{CC} (V)	C_L (pF)	R_L (Ω)	$t_s = t_r$ (ns)	-40 to 85 °C		
						Min	Max	
t_{PLH} t_{PHL}	Propagation delay time	2.7	50	500	2.5		6.0	ns
		3.0 to 3.6				1.0	5.2	
t_{PZL} t_{PZH}	Output enable time to HIGH and LOW level	2.7	50	500	2.5	1.0	6.0	ns
		3.0 to 3.6				1.0	5.0	
t_{PLZ} t_{PHZ}	Output disable time to HIGH and LOW level	2.7	50	500	2.5	1.0	6.0	ns
		3.0 to 3.6				1.0	5.0	
t_{OSLH} t_{OSHL}	Output to output skew time (1) (2)	3.0 to 3.6	50	500	2.5		1.0	ns

1. Skew is defined as the absolute value of the difference between the actual propagation delay for any two outputs of the same device switching in the same direction, either HIGH or LOW ($t_{OSLH} = | t_{PLHm} - t_{PLHn} |$, $t_{OSHL} = | t_{PHLm} - t_{PHLn} |$)
2. Parameter guaranteed by design

Table 8. Capacitive characteristics

Symbol	Parameter	Test condition		Value			Unit
		V_{CC} (V)		T_A = 25 °C			
				Min	Typ	Max	
C_{IN}	Input capacitance	3.3	V_{IN} = 0 to V_{CC}		5		pF
C_{OUT}	Output capacitance	3.3	V_{IN} = 0 to V_{CC}		10		pF
C_{PD}	Power dissipation capacitance (1)	3.3	f_{IN} = 10MHz V_{IN} = 0 or V_{CC}		37		pF

1. C_{PD} is defined as the value of the IC's internal equivalent capacitance which is calculated from the operating current consumption without load. (Refer to Test Circuit). Average operating current can be obtained by the following equation. $I_{CC(opr)} = C_{PD} \times V_{CC} \times f_{IN} + I_{CC}/4$ (per gate)

5 Test circuit

Figure 4. Test circuit

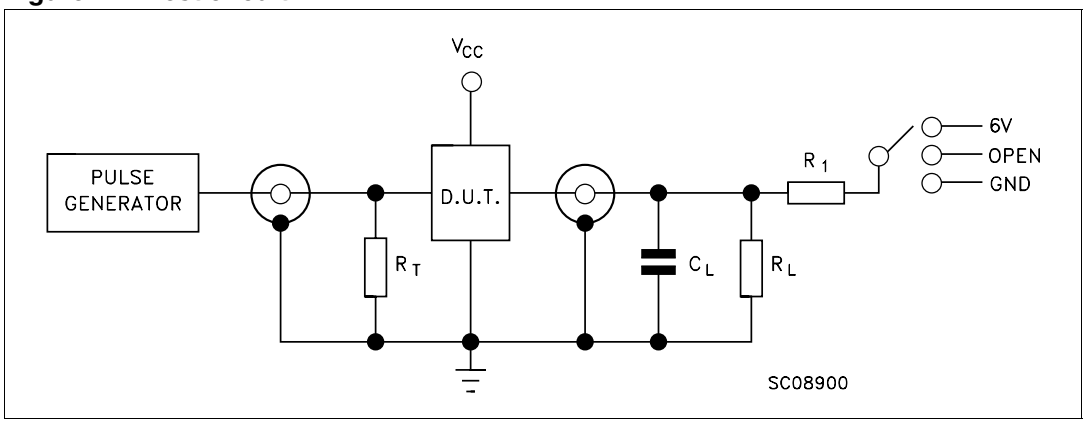

Table 9. Test Circuit

Test	Switch
t_{PLH}, t_{PHL}	Open
t_{PZL}, t_{PLZ}	6V
t_{PZH}, t_{PHZ}	GND

C_L = 50pF or equivalent (includes jig and probe capacitance)

R_L = 500Ω or equivalent

R_T = Z_{OUT} of pulse generator (typically 50Ω)

6 Waveforms

Figure 5. Propagation delay (f = 1MHz; 50% duty cycle)

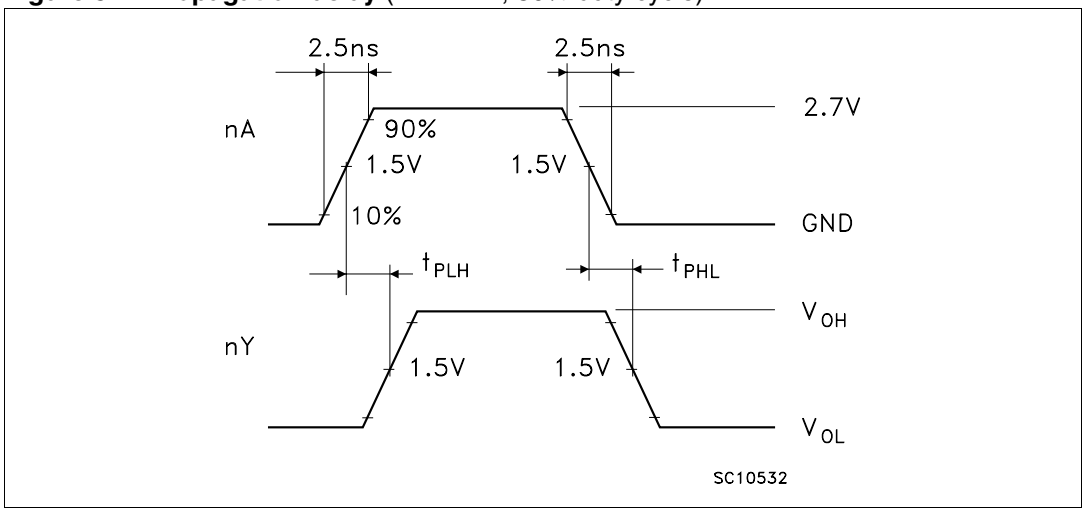

Figure 6. Output enable and disable time (f = 1MHz; 50% duty cycle)

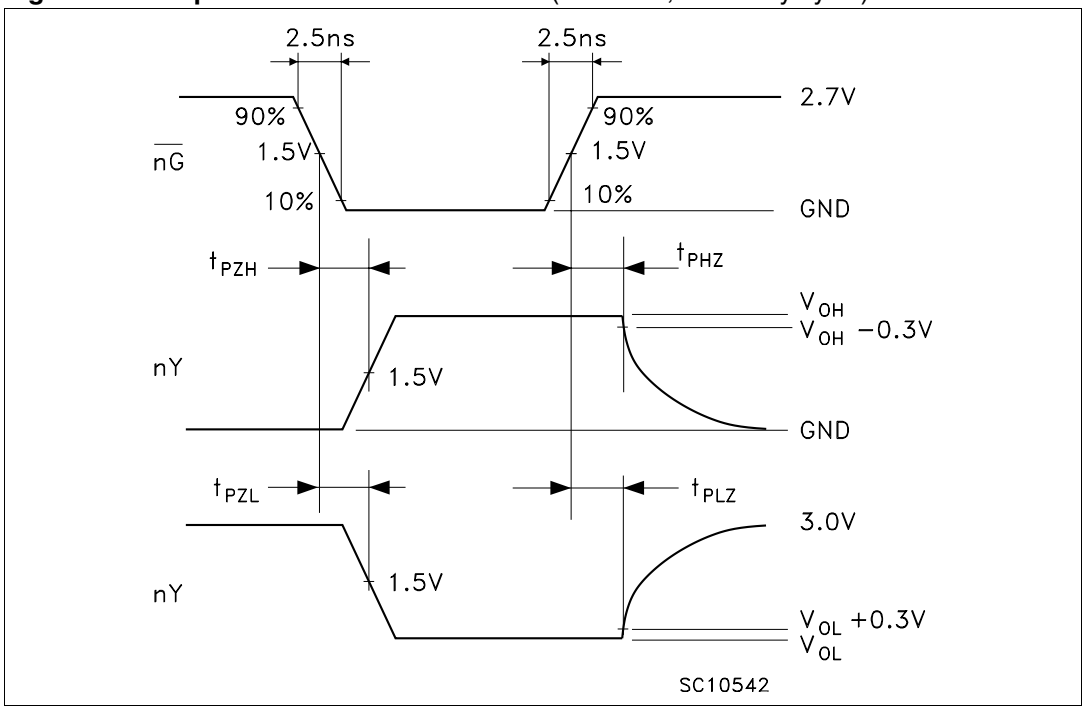

7 Package mechanical data

In order to meet environmental requirements, ST offers these devices in ECOPACK® packages. These packages have a Lead-free second level interconnect . The category of second level interconnect is marked on the package and on the inner box label, in compliance with JEDEC Standard JESD97. The maximum ratings related to soldering conditions are also marked on the inner box label. ECOPACK is an ST trademark. ECOPACK specifications are available at: www.st.com

SO-14 MECHANICAL DATA

DIM.	mm.			inch		
	MIN.	TYP	MAX.	MIN.	TYP.	MAX.
A	1.35		1.75	0.053		0.069
A1	0.1		0.25	0.004		0.010
A2	1.10		1.65	0.043		0.065
B	0.33		0.51	0.013		0.020
C	0.19		0.25	0.007		0.010
D	8.55		8.75	0.337		0.344
E	3.8		4.0	0.150		0.157
e		1.27			0.050	
H	5.8		6.2	0.228		0.244
h	0.25		0.50	0.010		0.020
L	0.4		1.27	0.016		0.050
k	0°		8°	0°		8°
ddd			0.100			0.004

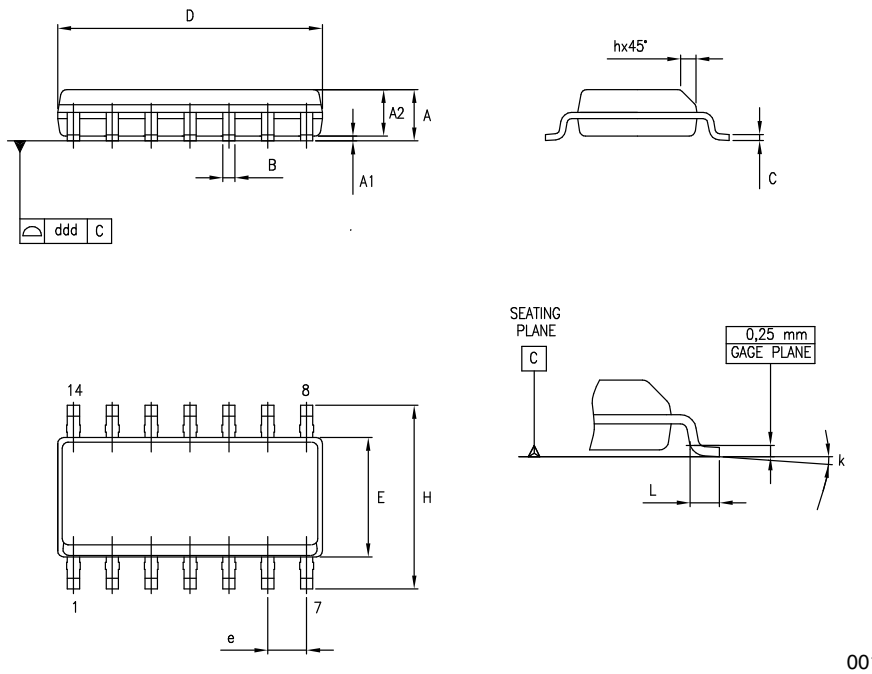

0016019D

TSSOP14 MECHANICAL DATA

DIM.	mm.			inch		
	MIN.	TYP	MAX.	MIN.	TYP.	MAX.
A			1.2			0.047
A1	0.05		0.15	0.002	0.004	0.006
A2	0.8	1	1.05	0.031	0.039	0.041
b	0.19		0.30	0.007		0.012
c	0.09		0.20	0.004		0.0089
D	4.9	5	5.1	0.193	0.197	0.201
E	6.2	6.4	6.6	0.244	0.252	0.260
E1	4.3	4.4	4.48	0.169	0.173	0.176
e		0.65 BSC			0.0256 BSC	
K	0°		8°	0°		8°
L	0.45	0.60	0.75	0.018	0.024	0.030

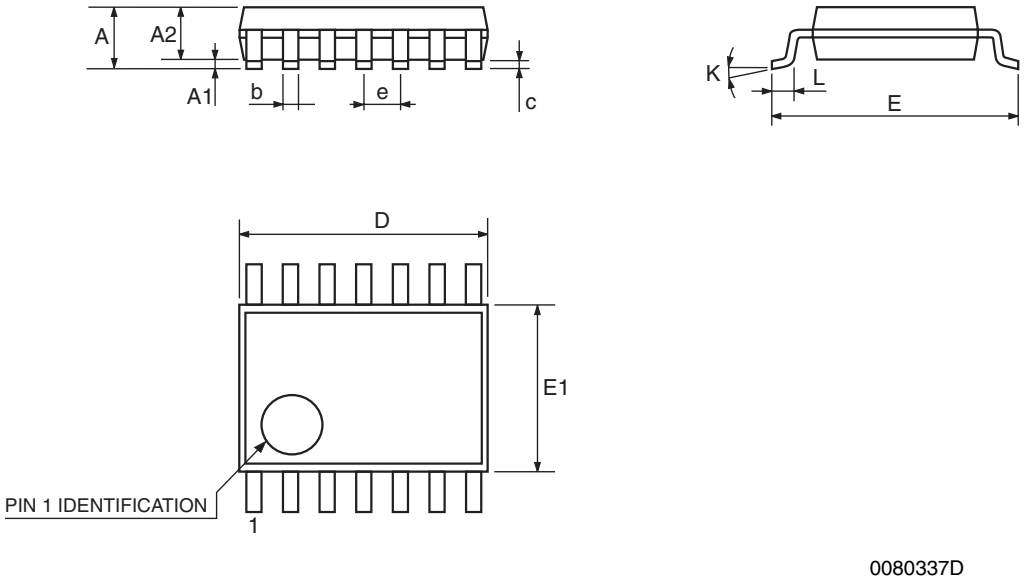

Tape & Reel SO-14 MECHANICAL DATA

DIM.	mm.			inch		
	MIN.	TYP	MAX.	MIN.	TYP.	MAX.
A			330			12.992
C	12.8		13.2	0.504		0.519
D	20.2			0.795		
N	60			2.362		
T			22.4			0.882
Ao	6.4		6.6	0.252		0.260
Bo	9		9.2	0.354		0.362
Ko	2.1		2.3	0.082		0.090
Po	3.9		4.1	0.153		0.161
P	7.9		8.1	0.311		0.319

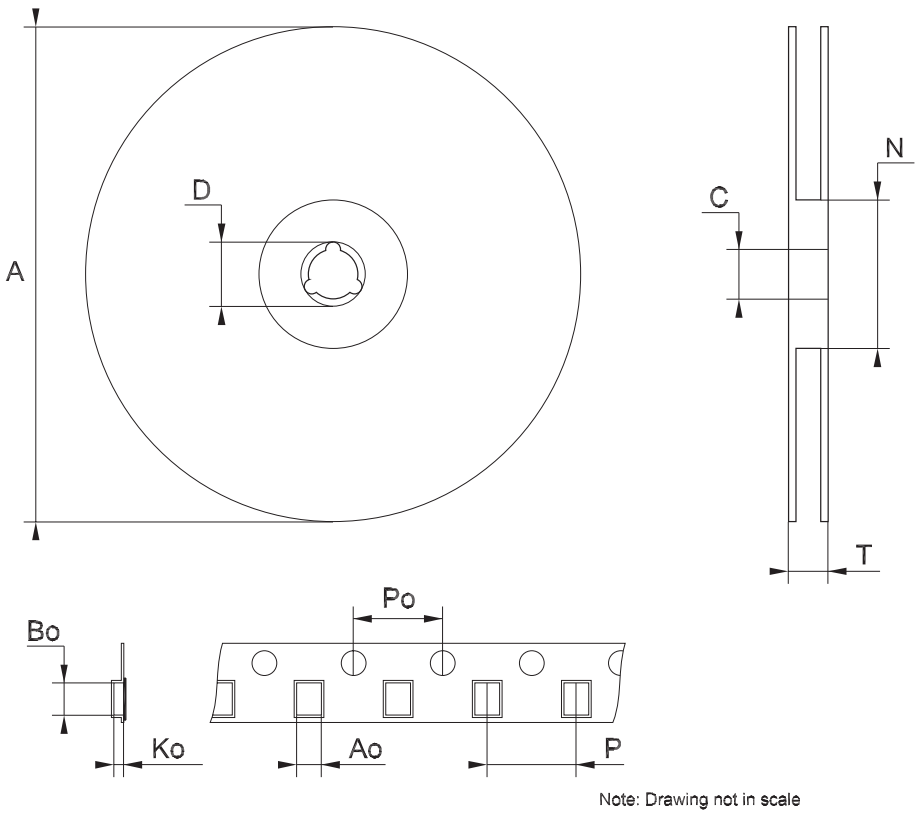

Tape & Reel TSSOP14 MECHANICAL DATA

DIM.	mm.			inch		
	MIN.	TYP	MAX.	MIN.	TYP.	MAX.
A			330			12.992
C	12.8		13.2	0.504		0.519
D	20.2			0.795		
N	60			2.362		
T			22.4			0.882
Ao	6.7		6.9	0.264		0.272
Bo	5.3		5.5	0.209		0.217
Ko	1.6		1.8	0.063		0.071
Po	3.9		4.1	0.153		0.161
P	7.9		8.1	0.311		0.319

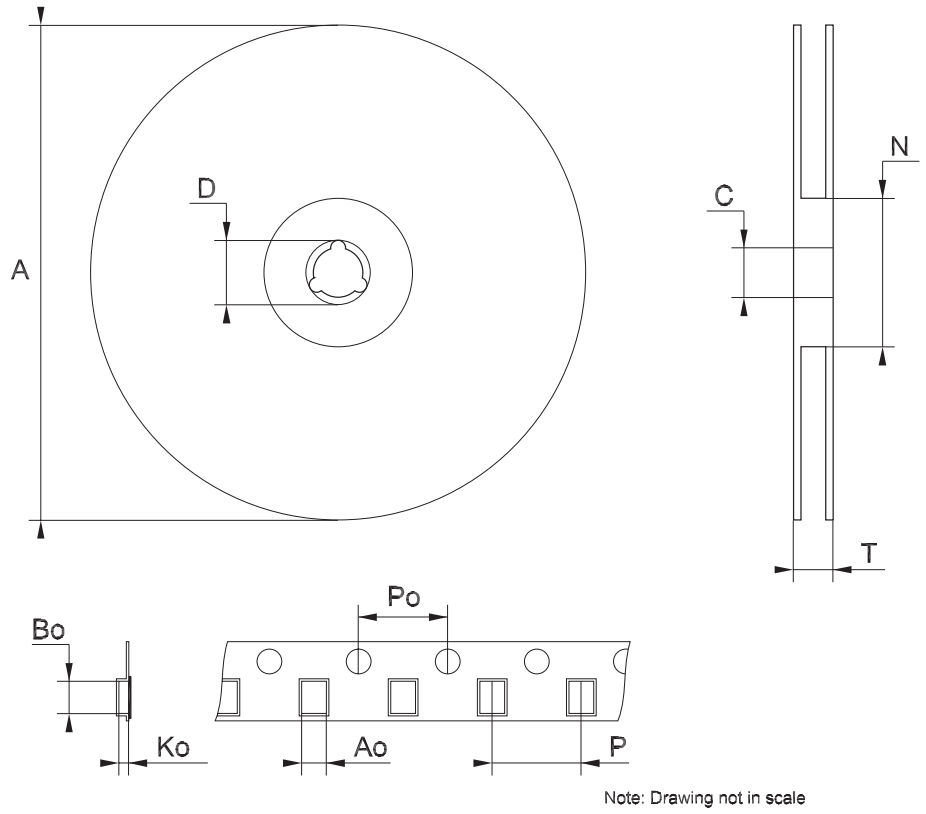

Note: Drawing not in scale

8 Revision history

Table 10. Revision history

Date	Revision	Changes
15-Sep-2004	5	Ordering codes revision - pag. 1.
13-Jul-2006	6	New template, temperature ranges updated

Please Read Carefully:

Information in this document is provided solely in connection with ST products. STMicroelectronics NV and its subsidiaries (“ST”) reserve the right to make changes, corrections, modifications or improvements, to this document, and the products and services described herein at any time, without notice.

All ST products are sold pursuant to ST’s terms and conditions of sale.

Purchasers are solely responsible for the choice, selection and use of the ST products and services described herein, and ST assumes no liability whatsoever relating to the choice, selection or use of the ST products and services described herein.

No license, express or implied, by estoppel or otherwise, to any intellectual property rights is granted under this document. If any part of this document refers to any third party products or services it shall not be deemed a license grant by ST for the use of such third party products or services, or any intellectual property contained therein or considered as a warranty covering the use in any manner whatsoever of such third party products or services or any intellectual property contained therein.

UNLESS OTHERWISE SET FORTH IN ST’S TERMS AND CONDITIONS OF SALE ST DISCLAIMS ANY EXPRESS OR IMPLIED WARRANTY WITH RESPECT TO THE USE AND/OR SALE OF ST PRODUCTS INCLUDING WITHOUT LIMITATION IMPLIED WARRANTIES OF MERCHANTABILITY, FITNESS FOR A PARTICULAR PURPOSE (AND THEIR EQUIVALENTS UNDER THE LAWS OF ANY JURISDICTION), OR INFRINGEMENT OF ANY PATENT, COPYRIGHT OR OTHER INTELLECTUAL PROPERTY RIGHT.

UNLESS EXPRESSLY APPROVED IN WRITING BY AN AUTHORIZED ST REPRESENTATIVE, ST PRODUCTS ARE NOT RECOMMENDED, AUTHORIZED OR WARRANTED FOR USE IN MILITARY, AIR CRAFT, SPACE, LIFE SAVING, OR LIFE SUSTAINING APPLICATIONS, NOR IN PRODUCTS OR SYSTEMS WHERE FAILURE OR MALFUNCTION MAY RESULT IN PERSONAL INJURY, DEATH, OR SEVERE PROPERTY OR ENVIRONMENTAL DAMAGE. ST PRODUCTS WHICH ARE NOT SPECIFIED AS "AUTOMOTIVE GRADE" MAY ONLY BE USED IN AUTOMOTIVE APPLICATIONS AT USER’S OWN RISK.

Resale of ST products with provisions different from the statements and/or technical features set forth in this document shall immediately void any warranty granted by ST for the ST product or service described herein and shall not create or extend in any manner whatsoever, any liability of ST.

ST and the ST logo are trademarks or registered trademarks of ST in various countries.

Information in this document supersedes and replaces all information previously supplied.

The ST logo is a registered trademark of STMicroelectronics. All other names are the property of their respective owners.

© 2006 STMicroelectronics - All rights reserved

STMicroelectronics group of companies

Australia - Belgium - Brazil - Canada - China - Czech Republic - Finland - France - Germany - Hong Kong - India - Israel - Italy - Japan - Malaysia - Malta - Morocco - Singapore - Spain - Sweden - Switzerland - United Kingdom - United States of America

www.st.com