STR485

Datasheet

3.3 V RS485 compatible with 1.8 V I/Os and selectable speed 20 Mbps or 250 kbps

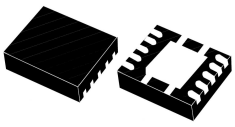

DFN10 3 x 3

Features

- Half-duplex RS485 transceiver
- 1.65 V to 3.6 V supply for data and enable signals
- 3 V to 3.6 V supply for bus supply
- High speed: up to 20 Mbps data rate
- Low speed selected by SLR pin : 250 kbps
- Up to 256 transceivers on the bus
- Fail safe receiver (bus open, idle and shorted)
- Thermal shutdown protection
- Low quiescent current in shutdown mode
- Extended temperature range : -40 °C to +105 °C
- Available in industry standard DFN10
- Bus-pin protection more than:
  - ±4 kV HBM protection
  - ±8 kV IEC61000-4-2 contact discharge
  - ±16 kV IEC61000-4-2 air discharge
  - Compliant IEC61000-4-4 fast transient burst Class B

Product status link
STR485

Description

The STR485 is a low power differential line transceiver for data transmission standard RS485 applications in half-duplex mode. Data and enable signals are compatible with 1.8 V or 3.3 V supplies.

Two speeds are selectable through SLR pin: fast data rate up to 20 Mbps or slow data rate for extended cable running to 250 kbps.

Excessive power dissipation caused by bus contention or faults is prevented by thermal shutdown circuit that forces the driver outputs into a high impedance state. The receiver has a fail-safe feature, which guarantees a high output state when the inputs are left open, shorted or idle.

1 Pin connections

Figure 1. Pin connections

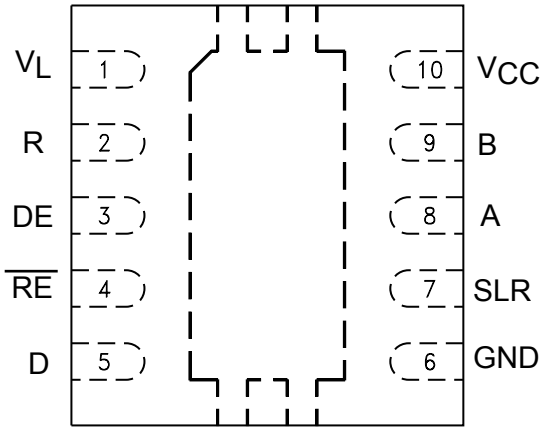

Table 1. Pin description

Name	Pin	I/O	Description
VL	1	Logic supply	1.65 V to 3.6 V supply for logic I/O signals
R	2	Digital output	Receiver data output
DE	3	Digital input	Driver enable input: serial resistors of 150 ohms followed by 2.5 Mohms/GND
nRE	4	Digital input	Receiver enable input: serial resistors of 150 ohms followed by 2.5 Mohms/VCC
D	5	Digital input	Transmission data input
GND	6	Ground	
SLR	7	Digital input	Slew rate select: low = 20 Mbps, high = 250 kbps. Default to 20 Mbps if SLR is left floating
A	8	Bus I/O	Digital bus I/O, A
B	9	Bus I/O	Digital bus I/O, B
VCC	10	Bus supply	3 V to 3.6 V supply for A and B bus lines

Figure 2. Typical application schematic

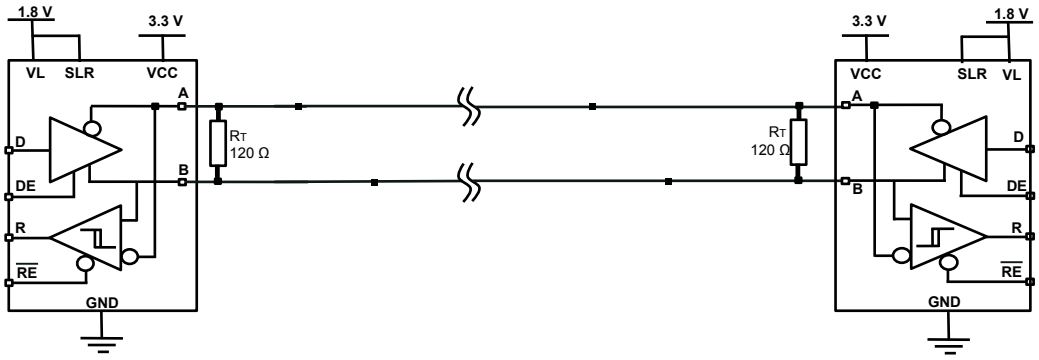

Figure 3. Example of implementation in a PCB

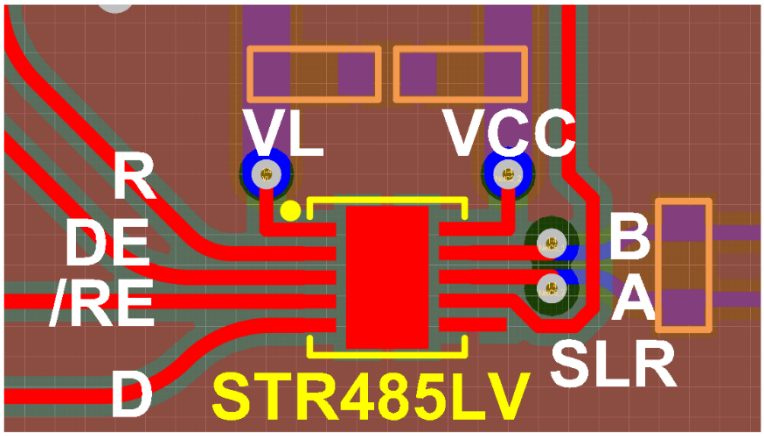

Adding an ESDA14V2BP6 or ETP01-2821 STMicroelectronics protection device can help the product to sustain an EFT perturbation level up to 4 kV.

2 Truth tables

The STR485 is a half-duplex differential driver/receiver compliant to the RS485 communication standard (ISO-IEC 8482). This product is perfectly adapted for low voltage application running with a low power supplies VL, generally set to 1.8 V and VCC set to 3.3 V.

These voltages confer a low power consumption to the product.

SLR is the data rate selection, this pin could be let floating but it is not recommended; in that case the high speed rate is automatically selected.

The SLR pin must be connected to the ground to provide a high speed communication up to 20 Mbps.

When this pin is connected to VL power supply, the data rate is limited to 250 kbps more adapted for very long distance data transmission.

Figure 4. Block diagram

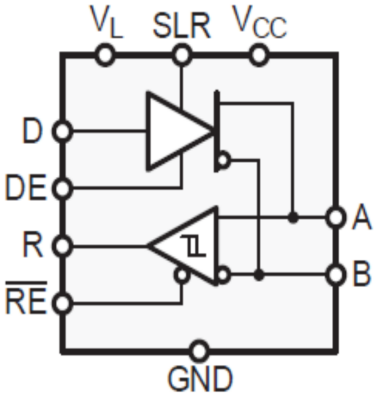

The product is perfectly adapted to run with 256 devices on the same bus thanks to the internal output resistance that is over 96 kΩ up to 105 °C; this resistance follows the RS485 condition that requests a minimum of 12 kΩ for 32 unit loads (UL).

The STR485 has internal protection against ESD that protect each device driver output and receiver input. The limits have been tested up ±4 kV electrostatic discharge (HBM) and ± 8 kV contact discharge and ± 16 kV air discharge shocks without latch-up.

Another external protections can be used to increase the communication robustness against different perturbation that can be seen on the application.

The power supplies must be well-decoupled by a minimal capacitor of 0.1 µF as closed as possible to the device power supply input. Moreover, the capacitor should be higher on the application with a minimum of 1 µF around the device.

The device operating range is set from VL = 1.65 V to 3.6 V and for Vcc = 3.0 V to 3.6 V. In any case VCC must be higher or equal than VL.

The applications should respect this voltage constraints to let the application communication device run to the best conditions.

Figure 5. Example of typical application

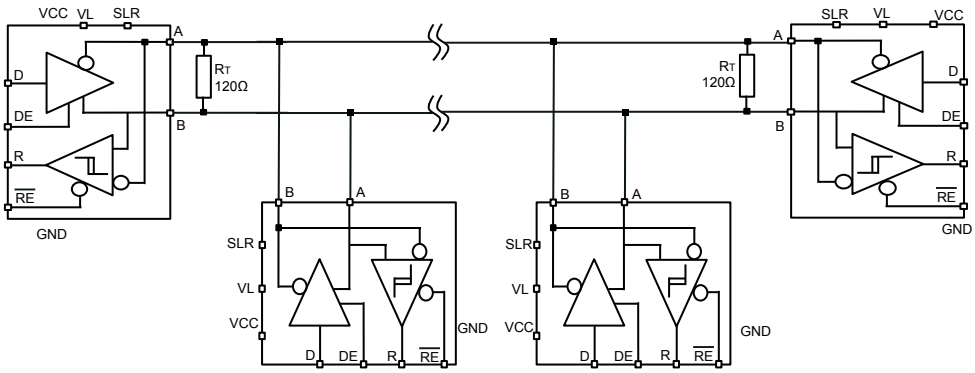

Table 2. Driver truth table

INPUT D	ENABLE DE	OUTPUT A	OUTPUT B	Function
H	H	H	L	Actively drive bus high
L	H	L	H	Actively drive bus low
X	L	Z	Z	Driver disabled
X	Open	Z	Z	Driver disabled by default
Open	H	H	L	Actively drive bus high by default

Table 3. Receiver truth table

Differential input $V_{ID} = V_A - V_B$	ENABLE RE	OUTPUT R	Function
$V_{ID} > V_{IT+}$	L	H	Receive valid bus high
$V_{IT-} < V_{ID} < V_{IT+}$	L	?	Indeterminate bus state
$V_{ID} < V_{IT-}$	L	L	Receive valid bus low
X	H	Z	Receiver disabled
X	OPEN	Z	Receiver disabled by default
Open-circuit bus	L	H	Fail safe high output
Short-circuit bus	L	H	Fail safe high output
Idle (terminated) bus	L	H	Fail safe high output

Table 4. Speed selection, SLR pin configuration

SLR	Data rate	Typical t_r / t_f
VL	250 kbps	200 ns
GND or OPEN	20 Mbps	7 ns

3 Absolute maximum ratings and operating conditions

Table 5. Absolute maximum ratings

Symbol	Parameter	Min.	Max.	Unit
V_L	Control supply voltage	-0.5	4	V
V_{CC}	Bus supply voltage	-0.5	4.8	V
	Voltage range at A or B inputs	-13	13	V
	Input voltage range at any logic pin	-0.3	V_L+0.3	V
	Receiver output current	-12	12	mA
T_J	Junction temperature		170	°C
T_{stg}	Storage temperature	-65	150	°C
ESD	IEC 61000-4-2 ESD (air-gap discharge), bus terminals and GND		± 16	kV
	IEC 61000-4-2 ESD (contact discharge), bus terminals and GN		± 8	kV
	IEC 61000-4-4 EFT (fast transient or burst) bus terminals and GND		± 2	kV
	JEDEC standard 22, test method A114, HBM, all terminals		± 4	kV
	JEDEC standard 22, test method C101, (charged device model), all pins		± 1.5	kV

Note: All voltage values, except the differential voltage, are with respect to network ground terminal.

Table 6. Operating conditions

Symbol	Parameter	Min.	Typ.	Max.	Unit
V_L	Control supply voltage	1.65		3.6	V
V_{CC}	Bus supply voltage	3	3.3	3.6	
V_I	Input level at any bus terminal (separately or common mode)	-7		12	
V_{IH}	High level input voltage (driver, driver enabled, receiver enable inputs, and slew rate select)	0.7×V_L		V_L	
V_{IL}	Low level input voltage (driver, driver enable, receiver enable inputs, and slew rate select)	0		0.3×V_L	
V_{ID}	Differential input voltage	-12		12	
IO	Output current / driver	-80		80	mA
	Output current / receiver	- 2		2	
R_L	Differential load resistance	54	60		Ω
C_L	Differential load capacitance		50		pF
D_R	Signaling rate / SLR = ‘0’			20	Mbps
	Signaling rate / SLR = ‘1’			250	kbps
T_A	Operating free-air temperature	-40		105	°C

Operation is specified for internal (junction temperature) up to 150 °C. Self-heating due to internal power dissipation should be considered for each application. Maximum junction temperature is internally limited by the thermal shut-down circuit which disables the driver outputs when the junction temperature reaches 165 °C.

Table 7. Thermal information

Symbol	Parameter	Min.	Typ.	Max.	Unit
$R_{th\text{-}ja}$	Thermal resistance, junction-to-ambient		40		°C/W
$R_{th\text{-}jc}$	Thermal resistance, junction-to-case		5.2		

4 Electrical characteristics

Table 8. Receiver: over recommended operating conditions (unless otherwise specified. Please, see "Operating conditions" table)

Symbol	Parameter	Test conditions	Min.	Typ.	Max.	Unit
Receiver/DC						
V_{IT+}	Positive-going receiver differential input voltage threshold		(1)	-60	-20	mV
V_{IT-}	Negative-going receiver differential input voltage threshold		-200	-130	(1)	
V_{HYS}	Receiver differential input voltage threshold hysteresis (V_{IT+} - V_{IT-})(1)		40	70		
V_{OH}	Receiver high-level output voltage	V_L = 1.65 V, I_{OH} = - 2 mA	1.25	1.45		V
		V_L = 3 V, I_{OH} = - 2 mA	2.75	2.9		
V_{OL}	Receiver low-level output voltage	V_L = 1.65 V, I_{OL} = 2 mA		0.2	0.45	
		V_L = 3 V, I_{OL} = 2 mA		0.1	0.25	
C_{OD}	Differential output capacitance			15		pF
I_{OZ}	Receiver output high-impedance current	V_O = 0 V or V_L, nRE at V_L	-1		1	µA
R_{in}	Receiver input impedance	-7 V ≤ V_{incm} ≤ +12 V -40 °C ≤ Temp ≤ 105 °C	96 (2)			kΩ
I_I	Receiver input current (disabled driver)	1V65 < V_L < 3.3 V, V_{CC} = 3.3 V		85(2)		µA
		V_I = 12 V, -40 °C ≤ Temp ≤ 105 °			125(2)	
		V_I = -7 V, -40 °C ≤ Temp ≤ 105 °	-100(2)			
Receiver / switching characteristics, SLR = 'X'						
t_r, t_f	Receiver output rise/fall time	C_L=15 pF		5	15	ns
t_{PHL}, t_{PLH}	Receiver propagation delay time		15	25	60	
$t_{SK(P)}$	Receiver pulse skew, | t_{PHL} – t_{PLH}|				15	
t_{PLZ}, t_{PHZ}	Receiver disable time			12	20	
t_{PLZ}, t_{PZH}, t_{PZL}, t_{PZH}	Receiver enable time	Driver enabled C_L=15 pF with 1 kΩ		15	80	
		Driver disabled C_L=15 pF with 1 kΩ		2	8	µs

1. *Under any specific conditions, V_{IT+}, is specified to be at least V_{HYS} higher than V_{IT-}*
2. *Guaranteed by design simulation in temperature.*

Table 9. Driver: over recommended operating conditions (unless otherwise specified. Please, see "Operating conditions" table)

Symbol	Parameter	Test conditions	Min.	Typ.	Max.	Unit
DC driver/ DC						
I_I	Driver input, driver enable, and receiver enable input current		-2		2	µA
$\|V_{OD}\|$	Driver differential output voltage magnitude	R_L = 60 Ω, 375 Ω on each output to –7 V to 12	1.5	2		V
		RL = 54 Ω (RS-485)	1.5	2		
		RL = 100 Ω (RS-422) T_J ≥ 0 °C, V_{CC} ≥ 3.2	2			
$\Delta\|V_{OD}\|$	Change in magnitude of driver differential output voltage	RL = 54 Ω, CL = 50 pF	-50	0	50	mV
$V_{°C(SS)}$	Steady-state common-mode output voltage	Center of two 27-Ω load resistors	1	$V_{CC}/2$	3	V
$\Delta V_{°C}$	Change in differential driver output common-mode voltage		-50	0	50	mV
$V_{°C(PP)}$	Peak-to-peak driver common-mode output voltage			500		
Driver/switching characteristics, SLR='1', 250 kbps, bit time ≥ 4 µs						
t_r, t_f	Driver differential output rise/fall time	R_L=54 Ω, C_L=50 pF	0.05	0.2	1	µs
t_{PHL}, t_{PLH}	Driver propagation delay time		0.4	1	1.5	
$t_{SK(P)}$	Driver pulse skew, $\|t_{PHL} – t_{PLH}\|$				0.3	
t_{PLZ}, t_{PHZ}	Driver disable time			0.017	0.035	
t_{PLZ}, t_{PZH}	Driver enable time	Receiver enabled C_L=50 pF with 110 kΩ		0.7	1.2	
		Receiver disabled C_L=50 pF with 110 kΩ		1.64	2.4	µs
Driver/switching characteristics, SLR= '0', 20 Mbps, bit time ≥ 50 ns						
t_r, t_f	Driver differential output rise/fall time	R_L=54 Ω, C_L=50 pF	4	7	15	ns
t_{PHL}, t_{PLH}	Driver propagation delay		6	12	25	
$t_{SK(P)}$	Driver pulse skew, $\|t_{PHL} – t_{PLH}\|$				4	
t_{PLZ}, t_{PHZ}	Driver disable time			17	40	
t_{PZL}, t_{PZH}	Driver enable time	Receiver enabled		9	18	
		Receiver disabled		1	2.4	µs

Table 10. Supply current and protections: over recommended operating conditions (unless otherwise specified. Please, see "Operating conditions" table)

Symbol	Parameter	Test conditions	Min.	Typ.	Max.	Unit
Supply current						
I_{CC}	Supply current (quiescent)	Driver and receiver enabled DE = V_L, RE = GND, no load, T_{amb}		625		µA
		Driver and receiver enabled DE = V_L, RE = GND, no load, T<105 °C			900 (1)	
		Driver enabled, receiver disabled DE = VCC, =VL, No load, T_{amb}		315		
		Driver enabled, receiver disabled DE = VCC, =VL, No load, T < 105 °C			550(1)	
		Driver disabled, receiver enabled DE = GND, =GND, No Load		515	700	
		Driver and receiver disabled DE = GND, =VL, no load [-40 °C, 105 °C]		0.5	3	
T_{TSD}	Thermal shutdown threshold			165		°C
T_{TSD_HYS}	Thermal shutdown hysteresis			15		
I_{OS}	Driver short-circuit output current	-7 V < V_{SHORT} < + 12 V	-250		250	mA

1. *Guaranteed by simulation.*

5 Test circuits and typical characteristics

In the schematics below, C_L includes fixture and instrumentation capacitance.

Figure 6. Driver differential output voltage with common-mode load

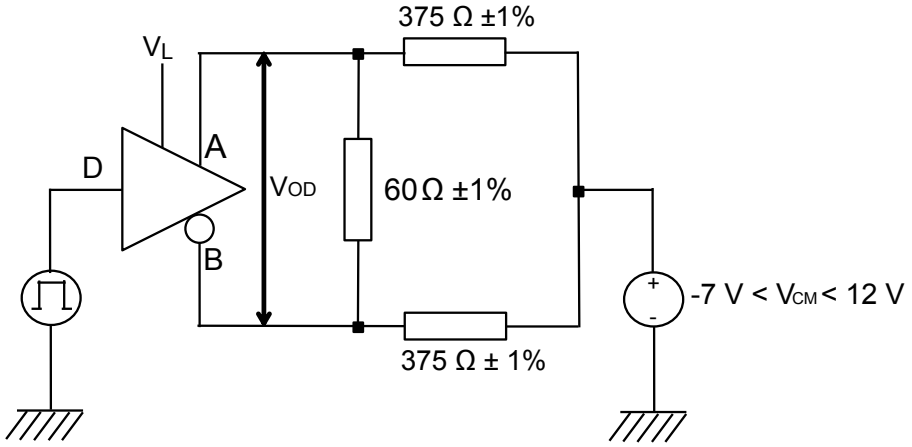

Input generator rate is 100 kbps, 50% duty cycle, rise and fall times less than 6 ns.

Figure 7. Driver differential and common-mode output with RS-485 load

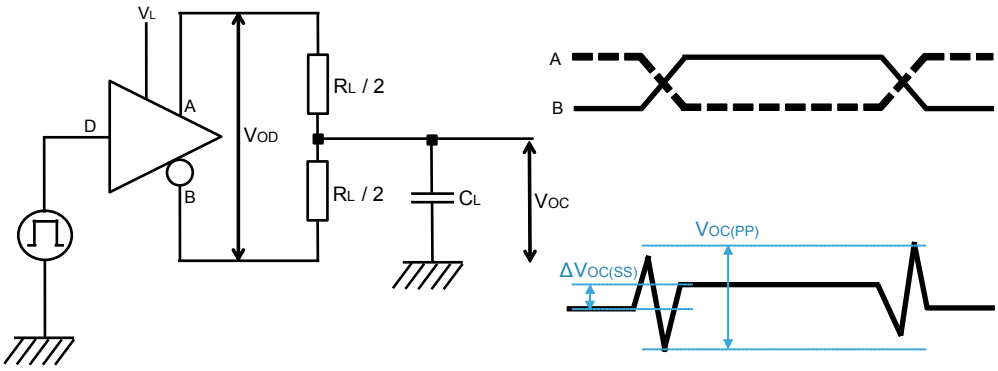

Figure 8. Driver differential output rise and fall times and propagation delays

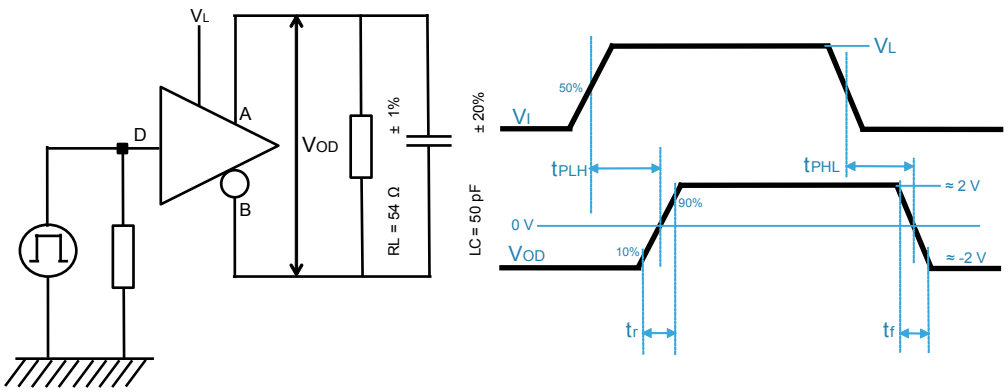

Figure 9. Driver enable and disable times with active high output and pull-down load

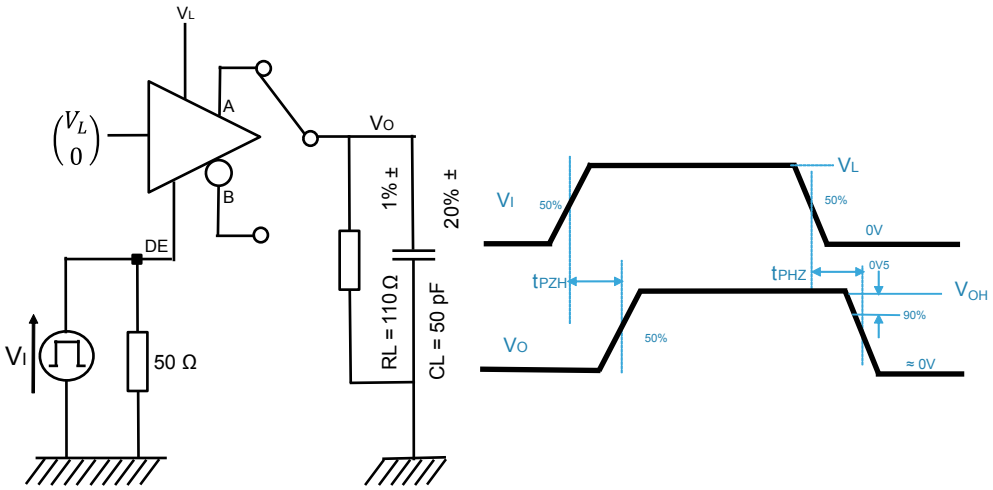

Figure 10. Driver enable and disable times with active low output and pull-up load

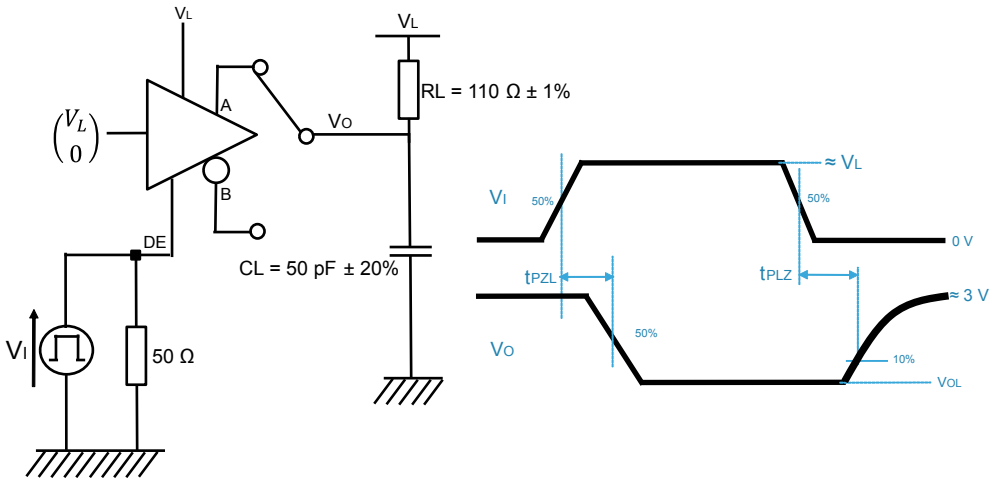

Figure 11. Receiver output rise and fall times and propagation delay

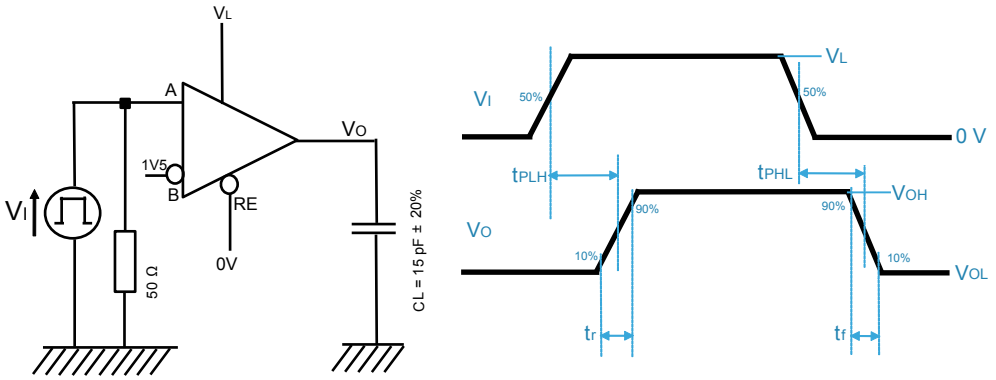

Figure 12. Receiver enable/disable times with driver enabled

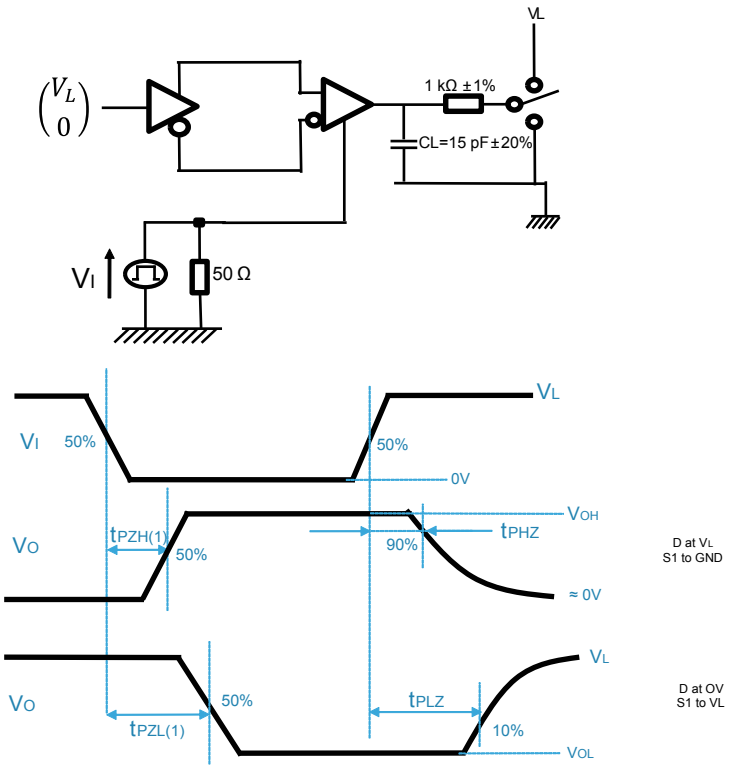

Figure 13. Receiver enable/disable times with driver disabled

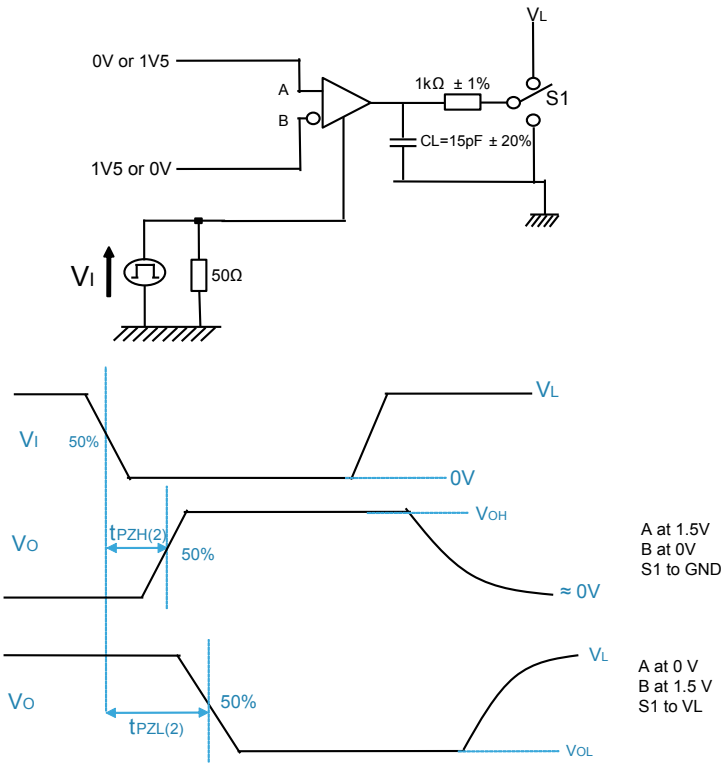

Figure 14. Short-circuit output current measurement

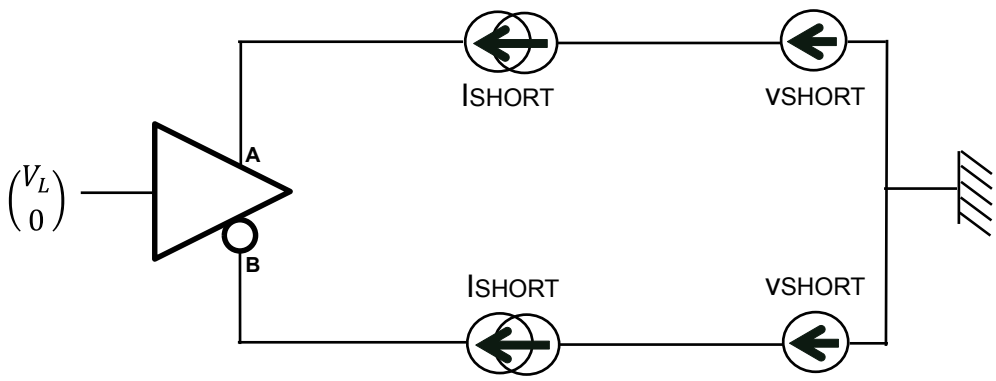

When one of the driver output is shorted to a voltage source (named VSHORT) between -7 V to +12 V stabilized, the current does not exceed 250 mA and the driver is protected.

6 Typical characteristics

Figure 15. Driver I_{CC} vs V_{CC} supply driver I_{CC} versus temperature 60 Ω load

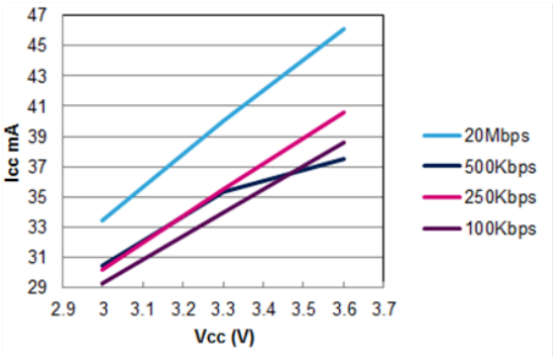

Figure 16. Driver I_{CC} vs temperature 60 Ω load

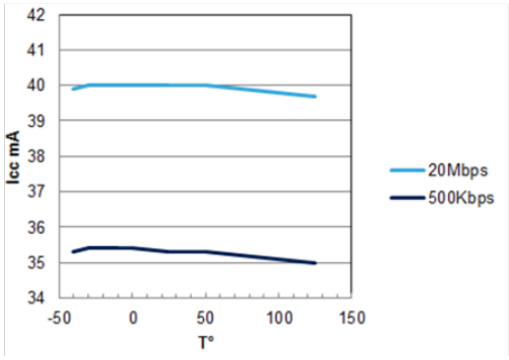

Figure 17. Driver output on 60 Ω load, clock @10 MHz 3V6pp

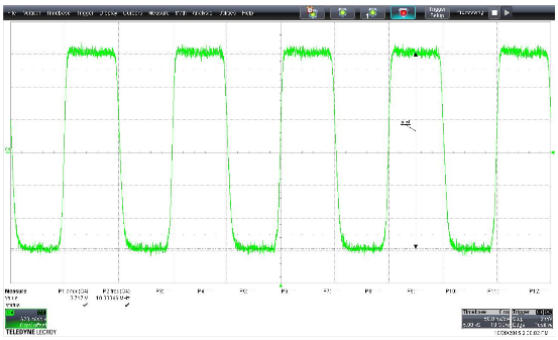

Figure 18. Driver output on 60 Ω load, speed selected @20 MHz 3V6pp

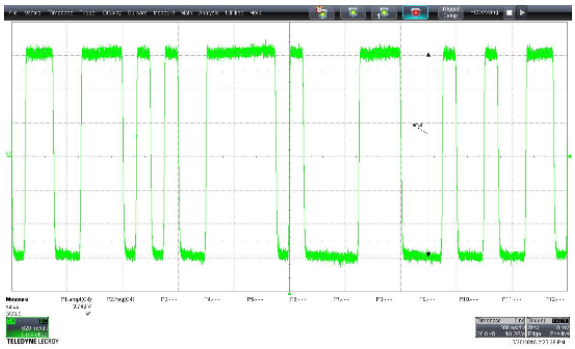

Figure 19. Eye diagram 20 Mbps short line

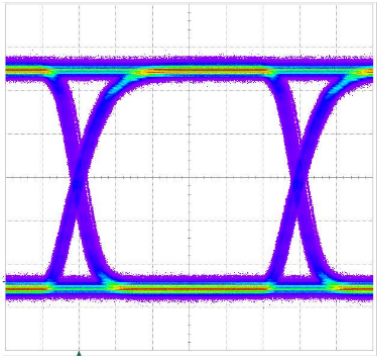

7 Equivalent input and output schematic diagrams

Figure 20. D and RE inputs

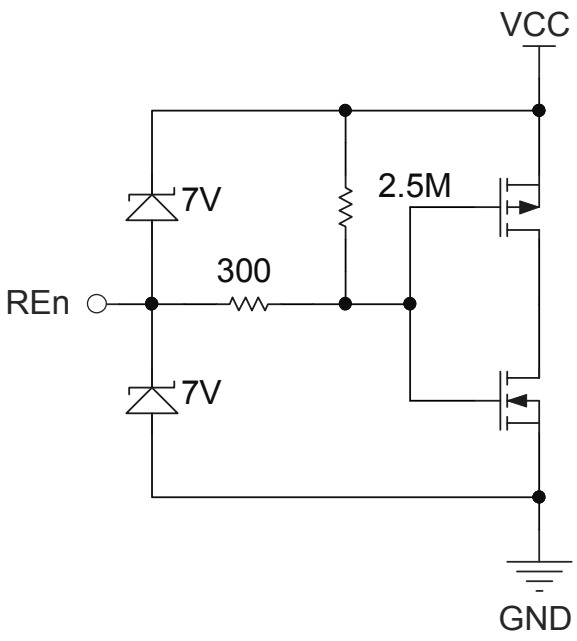

Figure 21. DE and SLR inputs

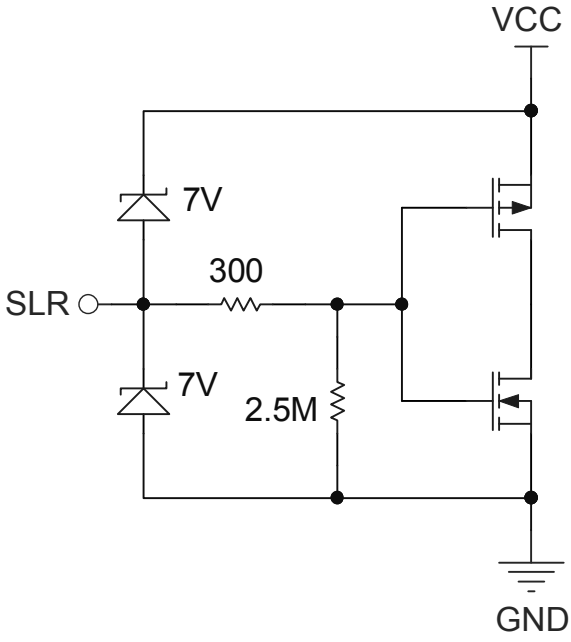

Figure 22. R output

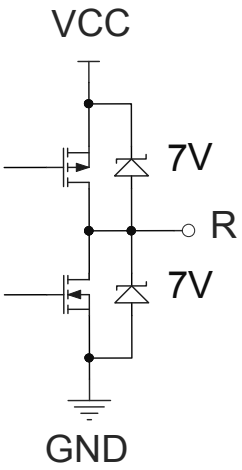

Figure 23. Driver output

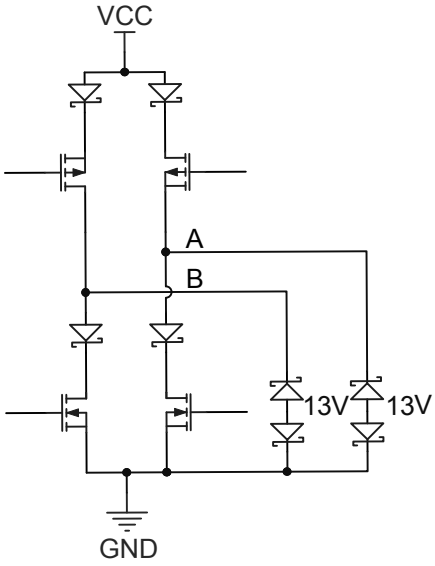

Figure 24. Receiver inputs

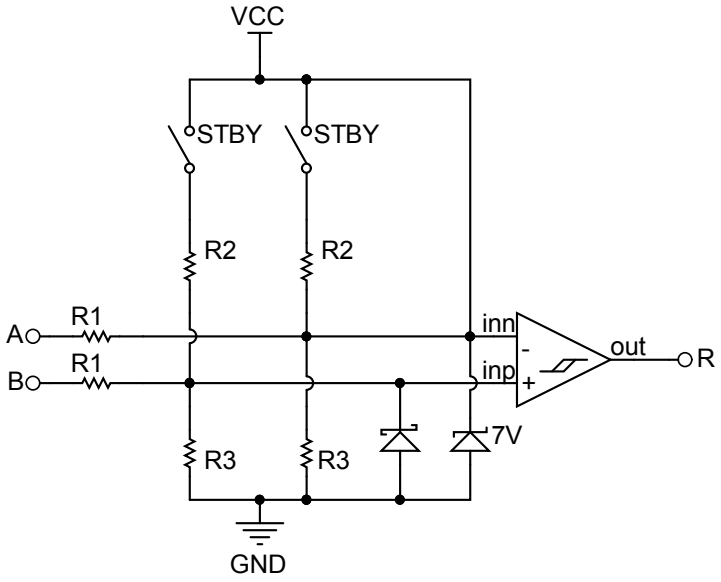

8 Package information

In order to meet environmental requirements, ST offers these devices in different grades of ECOPACK packages, depending on their level of environmental compliance. ECOPACK specifications, grade definitions and product status are available at: www.st.com. ECOPACK is an ST trademark.

8.1 DFN10 package information

Figure 25. DFN10 package outline

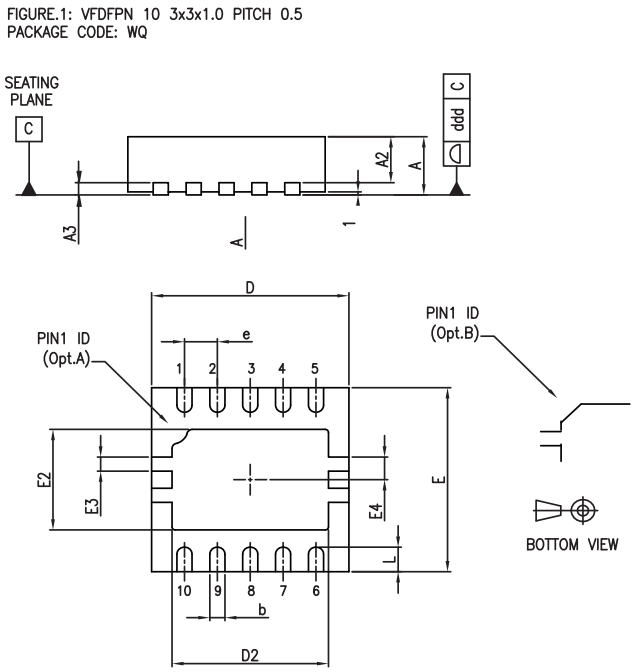

Table 11. DFN10 package mechanical data

Symbol	mm		
	Min.	Typ.	Max.
A	0.80	0.90	1.00
A1		0.02	0.05
A2	0.55	0.65	0.80
A3		0.20	
b	0.18	0.25	0.30
D	2.85	3.00	3.15
D2	2.20		2.70
E	2.85	3.00	3.15
E2	1.40		1.75
e		0.50	
L	0.30	0.40	0.50
ddd			0.08

Note: VFDFPN stands for thermally enhanced very thin fine pitch dual flat packages. No lead. Very thin: 0.80 mm < A ≤ 1.00 mm / fine pitch: e < 1.00 mm

Figure 26. DFN10 recommended footprint

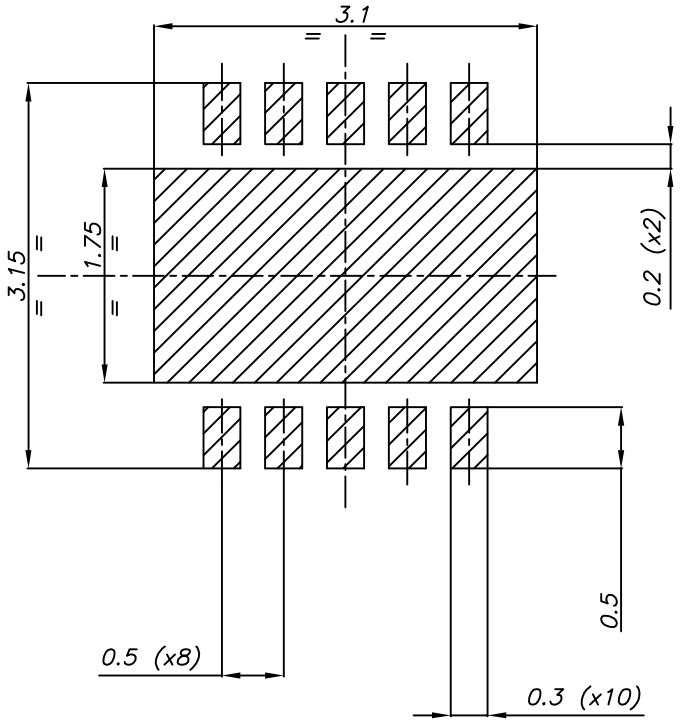

9 Ordering information

Order code	Temperature range	Package	Marking
STR485LV	-40 °C to +105 °C	DFN10	485L

Revision history

Table 12. Document revision history

Date	Version	Changes
20-Sep-2018	1	Initial release.
16-Oct-2018	2	Updated Table 10. Supply current and protections: over recommended operating conditions (unless otherwise specified. Please, see "Operating conditions" table).
15-Apr-2019	3	Updated Table 9. Driver: over recommended operating conditions (unless otherwise specified. Please, see "Operating conditions" table).
24-Oct-2019	4	Updated Table 1. Pin description and Section 7 Equivalent input and output schematic diagrams.

Contents

1 Pin connections 2
2 Truth tables. 4
3 Absolute maximum ratings and operating conditions 6
4 Electrical characteristics. 8
5 Test circuits and typical characteristics 11
6 Typical characteristics 15
7 Equivalent input and output schematic diagrams. 16
8 Package information. 18
8.1 DFN10 package information 18
9 Ordering information 20
Revision history 21

List of tables

Table 1. Pin description . . . 2
Table 2. Driver truth table . . . 5
Table 3. Receiver truth table . . . 5
Table 4. Speed selection, SLR pin configuration . . . 5
Table 5. Absolute maximum ratings . . . 6
Table 6. Operating conditions . . . 6
Table 7. Thermal information . . . 7
Table 8. Receiver: over recommended operating conditions (unless otherwise specified. Please, see "Operating conditions" table) . . . 8
Table 9. Driver: over recommended operating conditions (unless otherwise specified. Please, see "Operating conditions" table) . . . 9
Table 10. Supply current and protections: over recommended operating conditions (unless otherwise specified. Please, see "Operating conditions" table) . . . 10
Table 11. DFN10 package mechanical data . . . 18
Table 12. Document revision history . . . 21

List of figures

Figure 1. Pin connections . . . 2
Figure 2. Typical application schematic . . . 3
Figure 3. Example of implementation in a PCB . . . 3
Figure 4. Block diagram . . . 4
Figure 5. Example of typical application . . . 5
Figure 6. Driver differential output voltage with common-mode load . . . 11
Figure 7. Driver differential and common-mode output with RS-485 load . . . 11
Figure 8. Driver differential output rise and fall times and propagation delays . . . 12
Figure 9. Driver enable and disable times with active high output and pull-down load . . . 12
Figure 10. Driver enable and disable times with active low output and pull-up load . . . 12
Figure 11. Receiver output rise and fall times and propagation delay . . . 13
Figure 12. Receiver enable/disable times with driver enabled . . . 13
Figure 13. Receiver enable/disable times with driver disabled . . . 14
Figure 14. Short-circuit output current measurement . . . 14
Figure 15. Driver I_{CC} vs V_{CC} supply driver I_{CC} versus temperature 60 Ω load . . . 15
Figure 16. Driver I_{CC} vs temperature 60 Ω load . . . 15
Figure 17. Driver output on 60 Ω load, clock @10 MHz 3V6pp . . . 15
Figure 18. Driver output on 60 Ω load, speed selected @20 MHz 3V6pp . . . 15
Figure 19. Eye diagram 20 Mbps short line . . . 15
Figure 20. D and RE inputs . . . 16
Figure 21. DE and SLR inputs . . . 16
Figure 22. R output . . . 16
Figure 23. Driver output . . . 16
Figure 24. Receiver inputs . . . 17
Figure 25. DFN10 package outline . . . 18
Figure 26. DFN10 recommended footprint . . . 19

IMPORTANT NOTICE – PLEASE READ CAREFULLY

STMicroelectronics NV and its subsidiaries (“ST”) reserve the right to make changes, corrections, enhancements, modifications, and improvements to ST products and/or to this document at any time without notice. Purchasers should obtain the latest relevant information on ST products before placing orders. ST products are sold pursuant to ST’s terms and conditions of sale in place at the time of order acknowledgement.

Purchasers are solely responsible for the choice, selection, and use of ST products and ST assumes no liability for application assistance or the design of Purchasers’ products.

No license, express or implied, to any intellectual property right is granted by ST herein.

Resale of ST products with provisions different from the information set forth herein shall void any warranty granted by ST for such product.

ST and the ST logo are trademarks of ST. For additional information about ST trademarks, please refer to www.st.com/trademarks. All other product or service names are the property of their respective owners.

Information in this document supersedes and replaces information previously supplied in any prior versions of this document.

© 2019 STMicroelectronics – All rights reserved