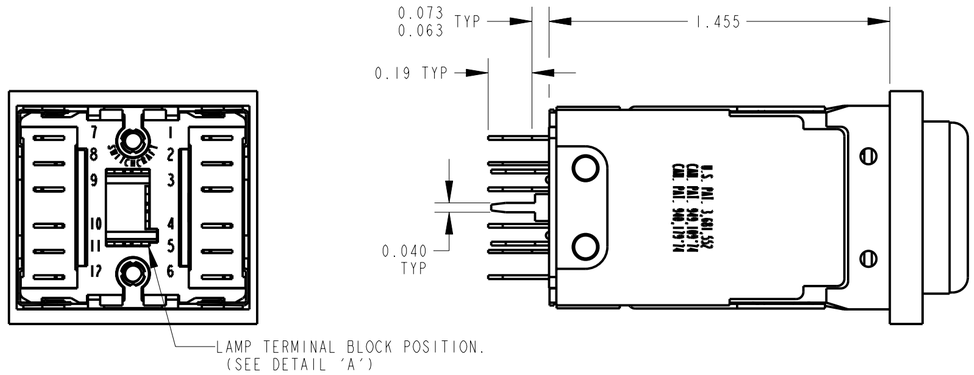

PC TERMINAL OPTION
PL812705X SHOWN

P L					X
SERIES PL	LAMP & SWITCH HOUSING COLOR	CIRCUITRY	ACTION	PUSHBUTTON COLOR	RoHS COMPLIANT
	1 - SINGLE LAMP, BLACK HOUSING 2 - TWIN LAMP, BLACK HOUSING 3 - NON-ILLUMINATED, BLACK HOUSING 4 - SINGLE LAMP, GRAY HOUSING 5 - TWIN LAMP, GRAY HOUSING 6 - NON-ILLUMINATED, GRAY HOUSING 7 - SINGLE LAMP, BLACK HOUSING (PC TERMINALS) 8 - TWIN LAMP, BLACK HOUSING (PC TERMINALS)	03 - 1C (SPDT) 06 - 2C (2PDT) 09 - 3C (3PDT) 12 - 4C (4PDT) 23 - 1C (8A)(SPDT) 26 - 2C (8A)(2PDT) 29 - 3C (8A)(3PDT) 32 - 4C (8A)(4PDT)	2 - MOMENTARY 7 - PUSH-LOCK/ PUSH-RELEASE	00 - NONE 01 - RED 03 - GREEN 04 - BLUE 05 - WHITE 08 - YELLOW 12 - CLEAR 13 - AMBER	

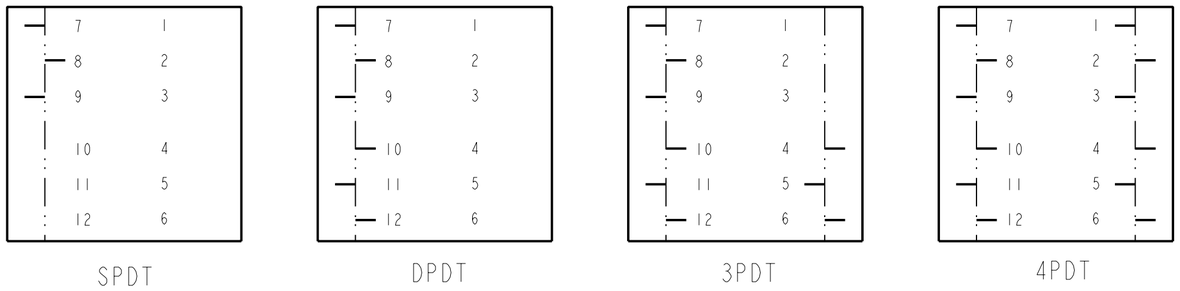

P.C. TERMINAL LOCATION

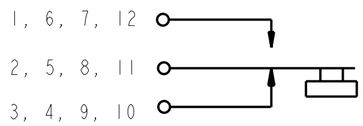

SCHEMATIC

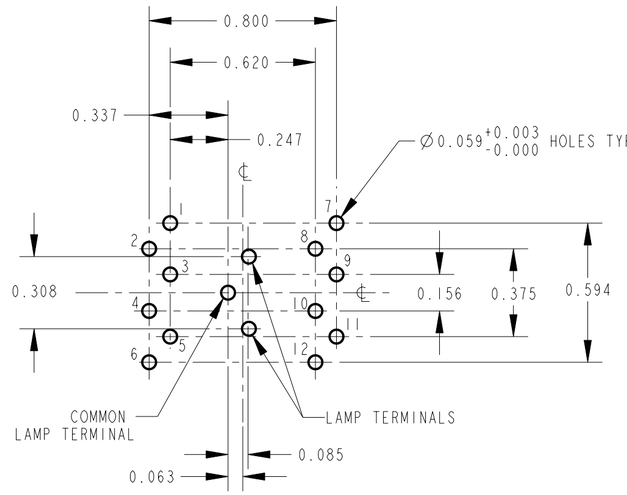

RECOMMENDED PCB LAYOUT
COMPONENT SIDE

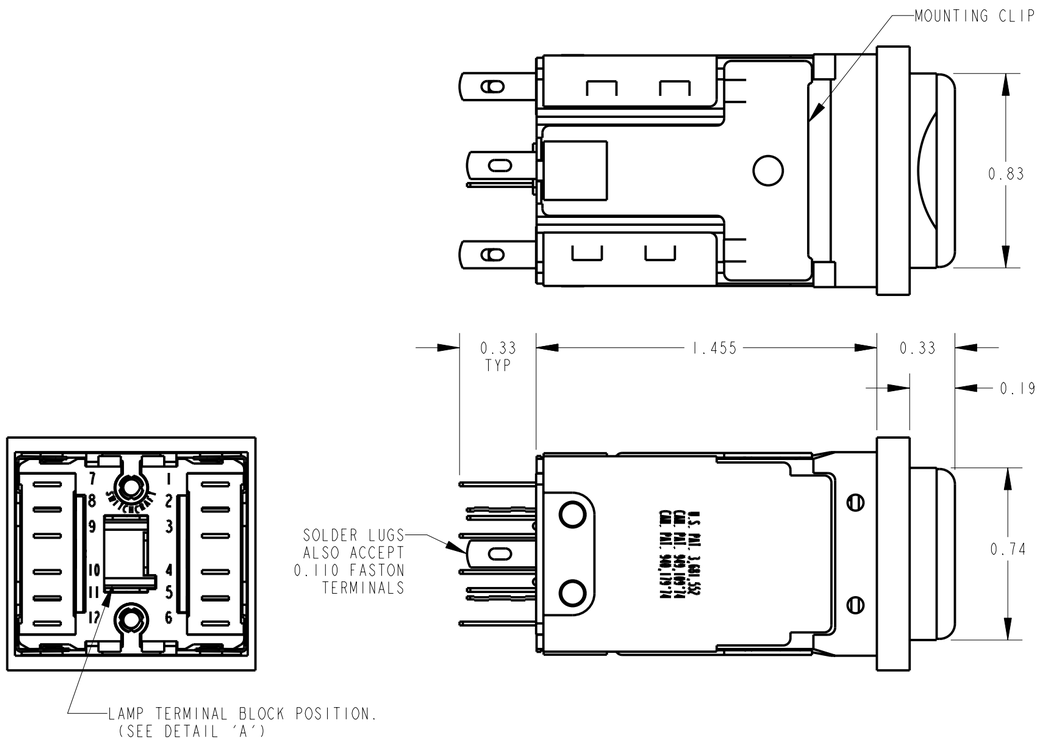

SOLDER TERMINAL OPTION
PL212705X SHOWN

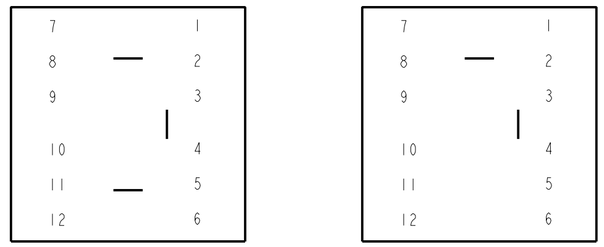

DETAIL 'A'
LAMP TERMINAL LOCATION

NOTES:

1. MATERIALS:
   HOUSING - THERMOPLASTIC, SEE TABLE FOR COLOR
   BUTTON - THERMOPLASTIC, SEE TABLE FOR COLOR
   TERMINALS - COPPER ALLOY, SILVER PLATED
   LAMP SOCKET - PLATED COPPER ALLOY
2. MOUNTIN HOLE - 1.000 x 0.875 RECTANGLE.
   0.125 MAX PANEL THICKNESS.
3. BUTTON TRAVEL - 0.22 WITH 0.09 FALL BACK ON PUSH-LOCK/PUSH-RELEASE.
4. ACCEPTS STANDARD T 1-3/4 FLANGE BASE LAMPS (NOT SUPPLIED).
5. THIS PRODUCT IS RoHS COMPLIANT.

CUSTOMER DRAWING

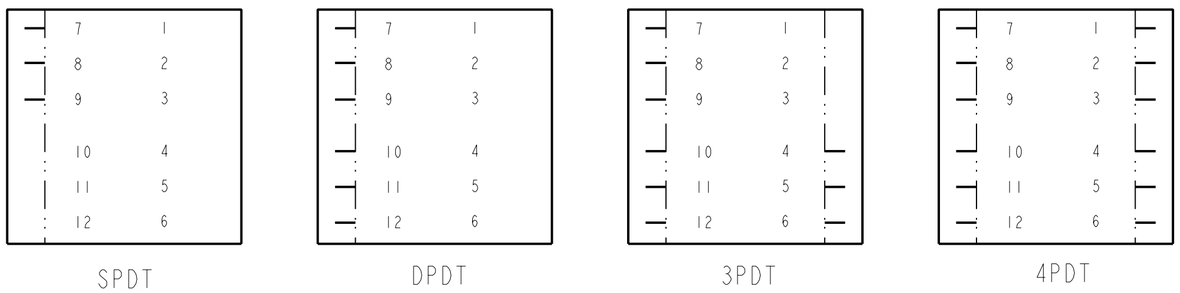

SOLDER TERMINAL LOCATION

REV	ECO NUMBER	DATE	BY	APVD
A	26244	4-8-09	TJK	TJK

REVISIONS

☆ STAR SYMBOL DENOTES CRITICAL DIMENSION

UNLESS OTHERWISE SPECIFIED
1. ALL DIMENSIONS IN INCHES
   -TWO PLACE DECIMALS ±0.01
   -THREE PLACE DECIMALS ±0.005
   -ANGLES ±1°
   -ALL DIA. CONCENTRIC WITHIN 0.005 T.I.R.
2. FEATURES ON THE SAME CENTERLINE MUST BE ALIGNED WITHIN ±0.002
3. REMOVE ALL BURRS

DO NOT SCALE DRAWING

THIS DRAWING DESCRIBES A DESIGN CONSIDERED PROPRIETARY IN NATURE, DEVELOPED AND MANUFACTURED BY SWITCHCRAFT INC. AND IS RELEASED ON A CONFIDENTIAL BASIS FOR IDENTIFICATION PURPOSES ONLY.

SIZE	WIDTH	MULT	LBS/M	TEMPER

FINISH
SPEC No.

MATERIAL
SPEC No.

FIRST USED ON

SCALE 2:1

DATE DRAWN	BY	CHKD	APVD
31-Mar-09	TJK	TJK 4-8-09	TJK 4-8-09

Switchcraft®

SHEET | OF |

NAME
PUSH-LITE SWITCHES, RoHS

PART No. PL___2__X SERIES
PL___7__X SERIES

REV A

Pro/Engineer CAD File

C