THIS DRAWING IS UNPUBLISHED. RELEASED FOR PUBLICATION -,- .
© COPYRIGHT - BY TYCO ELECTRONICS CORPORATION. ALL INTERNATIONAL RIGHTS RESERVED.

LOC	DIST
CM	00

REVISIONS

P	LTR	DESCRIPTION	DATE	DWN	APVD
	G	REV PER ECR 10-009281	04MAY10	JR	TM

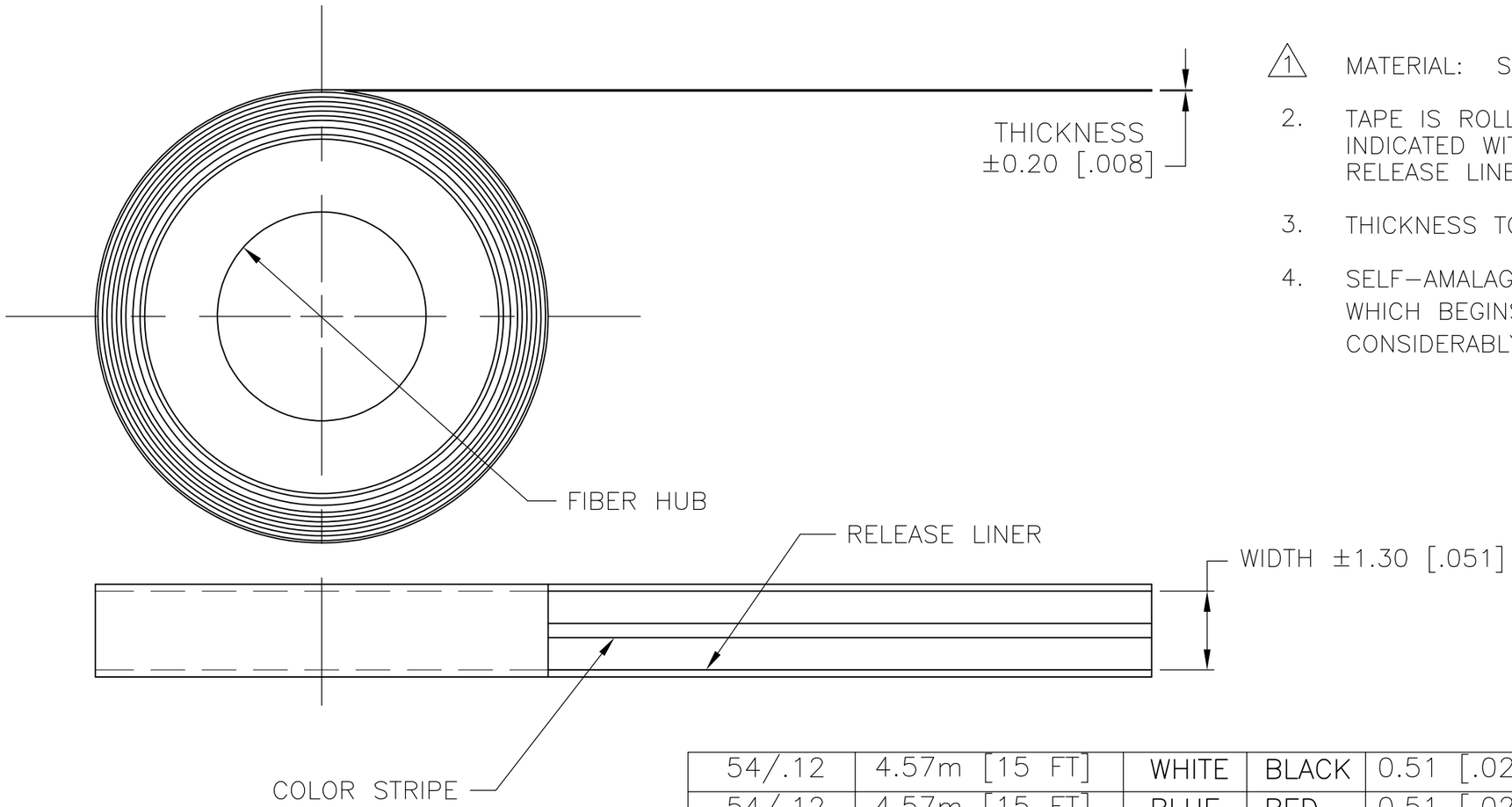

1. MATERIAL: SILICONE RUBBER.
2. TAPE IS ROLLED ONTO A FIBER HUB TO LENGTHS INDICATED WITH COLOR STRIPES DOWN AND RELEASE LINER ON OUTSIDE.
3. THICKNESS TO BE MEASURED AT CENTER OF TAPE.
4. SELF-AMALAGAMATING MATERIAL HAS A 1-YEAR SHELF-LIFE, WHICH BEGINS THE DAY ITS MADE. USE AFTER EXPIRATION CONSIDERABLY IMPEDES ITS ABILITY TO FUSE.

WEIGHT GRAMS/POUNDS	LENGTH MINIMUM	STRIPE COLOR	TAPE COLOR	THICKNESS	WIDTH	DESCRIPTIVE PART NO.	PART NUMBER
54/.12	4.57m [15 FT]	WHITE	BLACK	0.51 [.020]	25.4 [1.00]	ST1B215	1-608036-4
54/.12	4.57m [15 FT]	BLUE	RED	0.51 [.020]	25.4 [1.00]	ST1R215	1-608036-3
127/.28	10.97m[36 FT]	BLUE	CLEAR	0.51 [.020]	25.4 [1.00]	ST1C236	1-608036-2
576/1.27	10.97m[36 FT]	WHITE	RED	2.03 [.080]	38.1 [1.50]	ST12R836	608036-9
263/.58	10.97m[36 FT]	GREEN	RED	1.02 [.040]	31.8 [1.25]	ST14R436	608036-6
172/.38	10.97m[36 FT]	WHITE	GRAY	0.76 [.030]	25.4 [1.00]	ST1G336	608036-4
127/.28	10.97m[36 FT]	BLUE	GRAY	0.51 [.020]	25.4 [1.00]	ST1G236	608036-2
127/.28	10.97m[36 FT]	BLUE	RED	0.51 [.020]	25.4 [1.00]	ST1R236	608036-1

THIS DRAWING IS A CONTROLLED DOCUMENT.

DIMENSIONS: mm

TOLERANCES UNLESS OTHERWISE SPECIFIED:
0 PLC ±
1 PLC ±
2 PLC ±
3 PLC ±
4 PLC ±
ANGLES ±

MATERIAL 1

FINISH

DWN S. HOOVER 20-AUG-2002
CHK D. COLEY 20-AUG-2002
APVD D. COLEY 20-AUG-2002
PRODUCT SPEC
APPLICATION SPEC
WEIGHT

CUSTOMER DRAWING

Tyco Electronics
Tyco Electronics Corporation
Harrisburg, PA 17105-3608

NAME
TAPE, SILICONE FUSION

SIZE	CAGE CODE	DRAWING NO	RESTRICTED TO
A3	00779	C-608036	—

SCALE — SHEET 1 OF 1 REV G

1470-19 (1/08)